OPERATOR'S MANUAL

LA-682 Loader

KUBOTA
FRONT LOADER

MODELS LA482
LA682

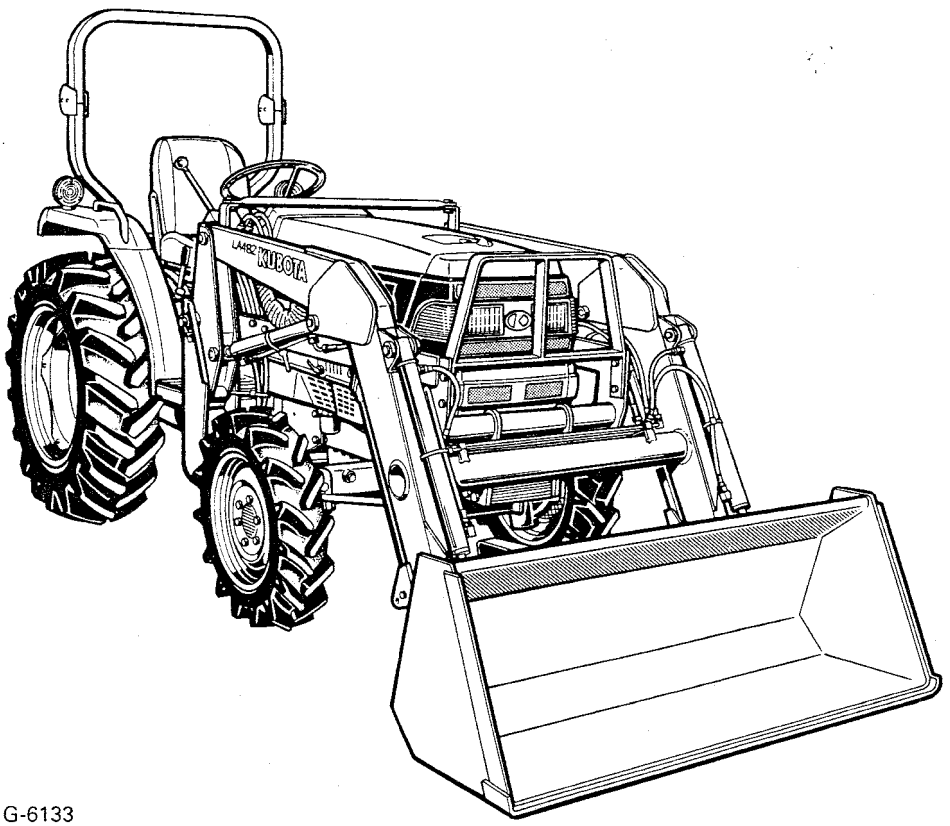

G-6133

READ AND SAVE THIS MANUAL

Kubota

FOREWORD

You are now the proud owner of a KUBOTA Loader. This loader is a product of KUBOTA quality engineering and manufacturing. It is made of fine materials and under a rigid quality control system. It will give you long, satisfactory service. To obtain the best use of your loader, please read this manual carefully. It will help you become familiar with the operation of the loader and contains many helpful hints about loader maintenance. It is KUBOTA's policy to utilize as quickly as possible every advance in our research. The immediate use of new techniques in the manufacture of products may cause some small parts of this manual to be outdated. KUBOTA distributors and dealers will have the most up-to-date information. Please do not hesitate to consult with them.

⚠ SAFETY FIRST

This symbol, the industry's "Safety Alert Symbol", is used throughout this manual and on labels on the machine itself to warn of the possibility of personal injury. Read these instructions carefully. It is essential that you read the instructions and safety regulations before you attempt to assemble or use this unit.

⚠ **DANGER:**	Indicates an imminently hazardous situation which, if not avoided, will result in death or serious injury.
⚠ **WARNING :**	Indicates a potentially hazardous situation which, if not avoided, could result in death or serious injury.
⚠ **CAUTION:**	Indicates a potentially hazardous situation which, if not avoided, may result in minor or moderate injury.
IMPORTANT :	Indicates that equipment or property damage could result if instructions are not followed.
NOTE :	Gives helpful information.

ABBREVIATION LIST

Abbreviations	Definitions
2WD	Two Wheel Drive
4WD	Four Wheel Drive
API	American Petroleum Institute
ASAE	American Society of Agricultural Engineers, USA
ASTM	American Society for Testing and Materials, USA
DIN	Deutsches Institut für Normung, GERMANY
DT	Dual Traction [4WD]
fpm	Feet Per Minute
GST	Glide Shift Transmission
Hi-Lo	High Speed-Low Speed
HST	Hydrostatic Transmission
m/s	Meters Per Second
PTO	Power Take Off
RH/LH	Right-hand and left-hand sides are determined by facing in the direction of forward travel
ROPS	Roll-Over Protective Structure
rpm	Revolutions Per Minute
r/s	Revolutions Per Second
SAE	Society of Automotive Engineers, USA
SMV	Slow Moving Vehicle
UDT	KUBOTA UDT fluid (Transmission-hydraulic fluid)

CONTENTS

⚠ SAFE OPERATION

Most loader equipment accidents can be avoided by following simple safety precautions.
These safety precautions, if followed at all times, will help you operate your loader safely.

1. Read and understand both the tractor and the loader operator's manuals before using the loader.
   Lack of knowledge can lead to accidents.
2. For your safety, ROPS with a seat belt is strongly recommended by KUBOTA in almost all applications. If your tractor has a folding ROPS, fold it down only when absolutely necessary and fold it up and lock it again as soon as possible. Do not wear the seat belt when the folding ROPS is down or the fixed ROPS is removed. If you have any questions consult your local KUBOTA Dealer. Always use seat belt when the tractor is equipped with a ROPS. Never use the seat belt when the tractor is not equipped with a ROPS.
3. Do not lift or carry anybody on the loader, bucket or attachment.
4. Never allow anyone to get under the loader bucket or reach through the boom when the bucket is raised.
5. Do not walk or work under a raised loader bucket or attachment unless it is securely blocked and held in position.
6. When operating on a slope, always operate up and down the slope, never across the slope.
7. Operate the loader from the tractor seat only.
8. For tractor stability and operator's safety, rear ballast must be added to the 3-point hitch and to the rear wheels.
9. To increase stability adjust the rear wheels to the widest setting that is suitable for your application.
10. Move and turn the tractor at low speeds.
11. Carry loader boom at a low position during transport. (You should be able to see over the bucket.)
12. Exercise extra caution when operating the loader with a raised bucket or fork.
13. Avoid loose fill, rocks and holes. They can be dangerous for loader operation or movement.
14. Be extra careful when working on inclines.
15. Avoid overhead wires and obstacles when loader is raised. Contacting electric lines can cause electrocution.
16. Allow for the loader length when making turns.
17. Gradually stop the loader boom when lowering or lifting.
18. Use caution when handling loose or shiftable loads.
19. When loader work has been completed, lower the loader boom to the ground, stop the engine, remove the key and lock the brakes before leaving the tractor seat.
20. Do not remove loader from tractor without approved bucket attached.
21. Make sure the parked loader is on stands and on a hard, level surface.
22. Operate the loader controls only when properly seated at the controls.
23. Visually check for hydraulic leaks and broken, missing, or malfunctioning parts.
    Make necessary repairs before operation.
24. Escaping hydraulic oil under pressure can have sufficient force to penetrate the skin, causing serious personal injury. Do not use hands to search for suspected leaks. If injured by escaping fluid, obtain medical treatment immediately.
25. Before disconnecting hydraulic lines, relieve all hydraulic pressure.
26. Do not tamper with the relief valve setting. The relief valve is pre-set at the factory. Changing the setting can cause overloading of the loader and tractor which may result in a serious personal injury.
27. Using loaders for handling large heavy objects, such as large round or rectangular bales, logs and oil drums is not recommended.
28. Handling large heavy objects can be extremely dangerous due to :
    - Danger of rolling the tractor over.
    - Danger of upending the tractor.
    - Danger of the object rolling or sliding down the loader boom onto the operator.
29. If you must perform this sort of work (item 27), protect yourself by :
    - Never lift the load higher than necessary to clear the ground.
    - Adding rear ballast to the tractor to compensate for the load.
    - Never lift large object with equipment that may permit it to roll back onto the operator.
    - Moving slowly and carefully, avoiding rough terrain.
30. It is the owner's responsibility to be certain anyone operating the loader read this manual first to be aware of the safe way of operating the loader.

31. Always wear safety goggles when servicing or repairing the machine.
32. When servicing or replacing pins in cylinder ends, bucket, etc., always use a brass drift and hammer. Failure to do so could result in injury from flying metal fragments.
33. Replace damaged or illegible safety labels. See following page for required labels.
34. Do not modify, alter, or permit anyone else to modify or alter the loader, any of its components, or any loader function without first consulting a KUBOTA Dealer.
35. Assemble, remove and reinstall the loader only as directed in this manual. Failure to do this could result in serious personal injury or death.
36. When operating another implement on a hillside, be sure to remove the loader to reduce the risk of roll over.
37. Never lift or pull any load from any point of the loader with a chain, rope, or cable. Doing so could cause a roll over or serious damage to the loader.
38. When a front loader is mounted on the tractor, enter and exit the operator's seat only from left side of the tractor.

DANGER, WARNING AND CAUTION LABELS

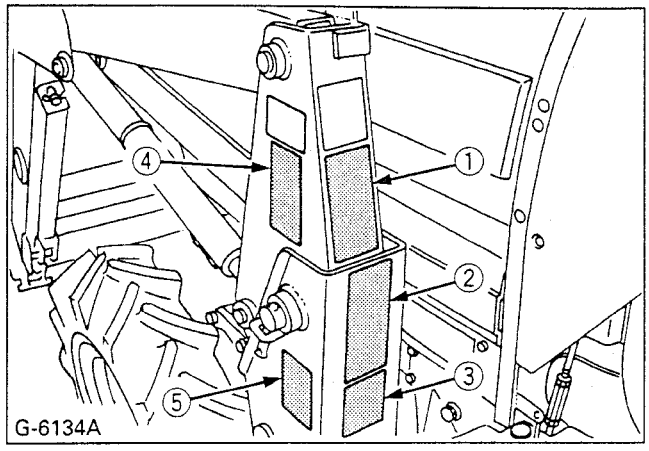

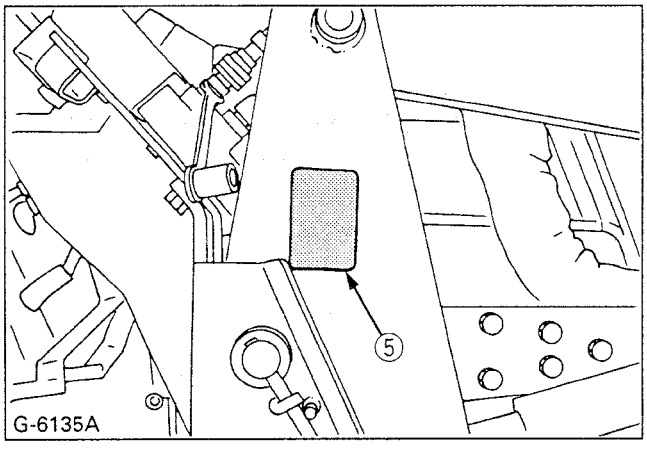

① Part No. 75546-5643-1

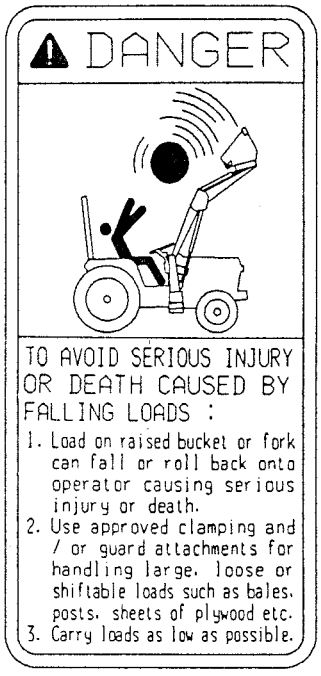

② Part No. 75546-5641-5

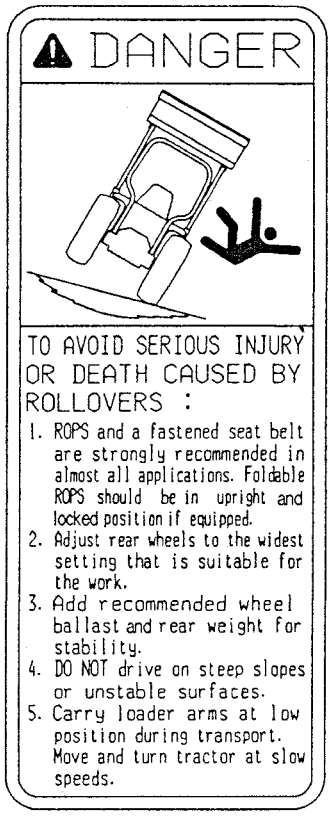

③ Part No. 75567-5642-2

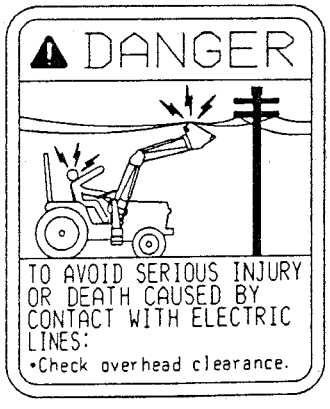

④ Part No. 75546-5645-2

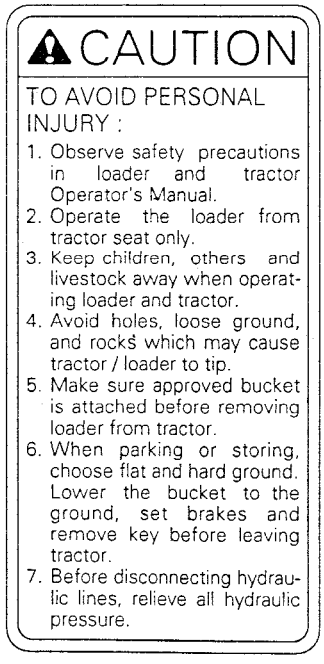

⑤ Part No. 75546-5644-1 (Both sides)

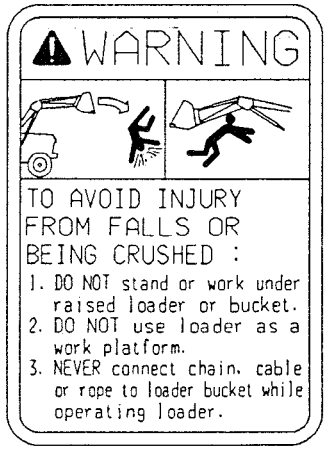

CARE OF DANGER, WARNING AND CAUTION LABELS

1. Keep danger, warning and caution labels clean and free from obstructing material.
2. Clean danger, warning and caution labels with soap and water, dry with a soft cloth.
3. Replace damaged or missing danger, warning and caution labels with new labels from your local KUBOTA Dealer.
4. If a component with danger, warning and caution label (s) affixed is replaced with new part, make sure new label (s) is (are) attached in the same location (s) as the replaced component.
5. Mount new danger, warning and caution labels by applying on a clean dry surface and pressing any bubbles to outside edge.

SERVICING OF LOADER

Your dealer is interested in your new loader and has the desire to help you get the most value from it. After reading this manual thoroughly, you will find that you can do some of the regular maintenance yourself.
However, when in need of parts or major service, be sure to see your KUBOTA Dealer.
For service, contact the KUBOTA Dealership from which you purchased your loader or your local KUBOTA Dealer.
When in need of parts, be prepared to give your dealer the loader serial number.
Locate the serial numbers now and record them in the space provided.

KUBOTA LOADER

Model _____

Serial Number _____

Date of Purchase _____

Name of Dealer _____
(To be filled in by purchaser)

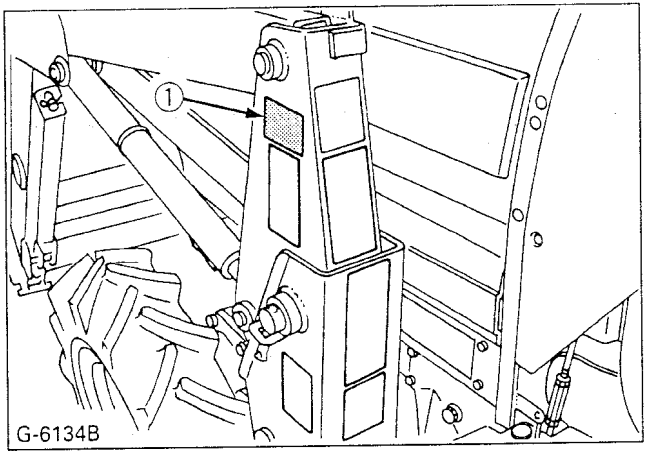

(1) Serial number

SPECIFICATIONS

SUITABLE TRACTOR

L3010, L3410 4 and 2 wheel drive models: LA482
L3710, L4310, L4300 4 and 2 wheel drive models: LA682

LOADER SPECIFICATIONS

Loader model			LA482	LA682	
Tractor model			L3010DT, L3410DT	L3710DT, L4310DT	L4300DT
Wheel base (WB)		mm(in.)	1670 (65.7)	1805 (71.1)	
Front tires			7.2-16	8.3-16	
Rear tires			12.4-24	14.9-24	
Boom cylinder	Bore	mm(in.)	45 (1-3/4)	50 (2.00)	
	Stroke	mm(in.)	450 (17.72)	485 (19.10)	
Bucket cylinder	Bore	mm(in.)	45 (1-3/4)	50 (2.00)	
	Stroke	mm(in.)	450 (17.72)	450 (17.72)	
Control Valve	Standard valve type		One Detent Float Position, Power Beyond Circuit		
	Remote valve type		One Detent Float Position, Two Stage Bucket Dump, Power Beyond Circuit		
Rated flow		L/m(GPM)	26.4 (7.0)	29.5 (7.8)	24.4 (6.4)
Maximum pressure		MPa(kg/cm^2, psi)	17.2 (175, 2490)		
Net weight (Approximate)		kg(lbs.)	380 (835)	440 (970)	

BUCKET SPECIFICATIONS

Loader model			LA482	LA682	LA482	LA682	LA482, LA682	LA482, LA682
Model			Square 60	Square 60	Square 66	Square 66	HD Round 60	Light Material 70
Width		mm(in.)	1525 (60.0)	1525 (60.0)	1675 (66.0)	1675 (66.0)	1525 (60.0)	1780 (70.0)
Depth (L)		mm(in.)	520 (20.5)	570 (22.4)	495 (19.5)	545 (21.5)	525 (20.7)	600 (23.6)
Height (M)		mm(in.)	530 (20.9)	530 (20.9)	515 (20.3)	515 (20.3)	605 (23.8)	620 (24.4)
Length (N)		mm(in.)	570 (22.5)	620 (24.4)	545 (21.5)	595 (23.5)	620 (24.4)	655 (25.8)
Capacity	Struck	m^3(cu.ft.)	0.23 (8.1)	0.25 (8.8)	0.23 (8.1)	0.25 (8.8)	0.24 (8.5)	0.36 (12.7)
	Heaped	m^3(cu.ft.)	0.28 (9.9)	0.31 (10.9)	0.29 (10.1)	0.31 (10.9)	0.30 (10.6)	0.45 (16.0)
Weight		kg(lbs.)	96 (212)	112 (247)	98 (216)	110 (243)	139 (308)	113 (250)

DIMENSIONAL SPECIFICATIONS

Loader model			LA482	LA682	
Tractor model			L3010DT, L3410DT	L3710DT, L4310DT	L4300DT
(A)	Maximum lift height to pivot pin	mm(in.)	2435 (95.9)	2560 (100.8)	
(B)	Maximum lift height under level bucket	mm(in.)	2290 (90.2)	2415 (95.1)	
(C)	Clearance with bucket dumped	mm(in.)	1940 (76.4)	2040 (80.3)	
(D)	Reach at maximum lift height	mm(in.)	580 (22.8)	625 (24.6)	690 (27.2)
(E)	Maximum dump angle	deg.	41	40	
(F)	Reach with bucket on ground	mm(in.)	1600 (63.0)	1690 (66.5)	
(G)	Bucket roll-back angle	deg.	20	23	
(H)	Digging depth	mm(in.)	65 (2.6)	95 (3.7)	
(J)	Overall height in carrying position	mm(in.)	1325 (52.2)	1380 (54.3)	

OPERATIONAL SPECIFICATIONS

Loader model			LA482	LA682	
Tractor model			L3010DT, L3410DT	L3710DT, L4310DT	L4300DT
	Lift capacity to maximum height (Bucket bottom mid point)	kg(lbs.)	480 (1060)	680 (1500)	
(U)	Lift capacity to maximum height-at pivot pin	kg(lbs.)	555 (1225)	810 (1780)	
(V)	Lift capacity to maximum height	kg(lbs.)	410 (905)	610 (1340)	
(W)	Lift capacity to 1.5m (59in.) height-at pivot pin	kg(lbs.)	750 (1650)	1020 (2250)	
(X)	Lift capacity to 1.5m (59in.) height	kg(lbs.)	590 (1300)	815 (1800)	
(Y)	Breakout force-at pivot pin	N(lbs.)	12580 (2830)	15260 (3430)	
(Z)	Breakout force	N(lbs.)	9415 (2115)	11720 (2630)	
(VV)	Bucket rollback force at maximum height	N(lbs.)	13460 (3025)	15700 (3530)	
(XX)	Bucket rollback force at 1.5m (59in.) lift height	N(lbs.)	16510 (3710)	19180 (4310)	
(ZZ)	Bucket rollback force at ground line	N(lbs.)	12200 (2740)	14470 (3250)	
Raising time		sec.	3.4	3.8	4.5
Lowering time		sec.	2.2	2.3	2.8
Bucket dumping time		sec.	1.5	1.7	1.9
Bucket rollback time		sec.	2.5	2.4	2.8

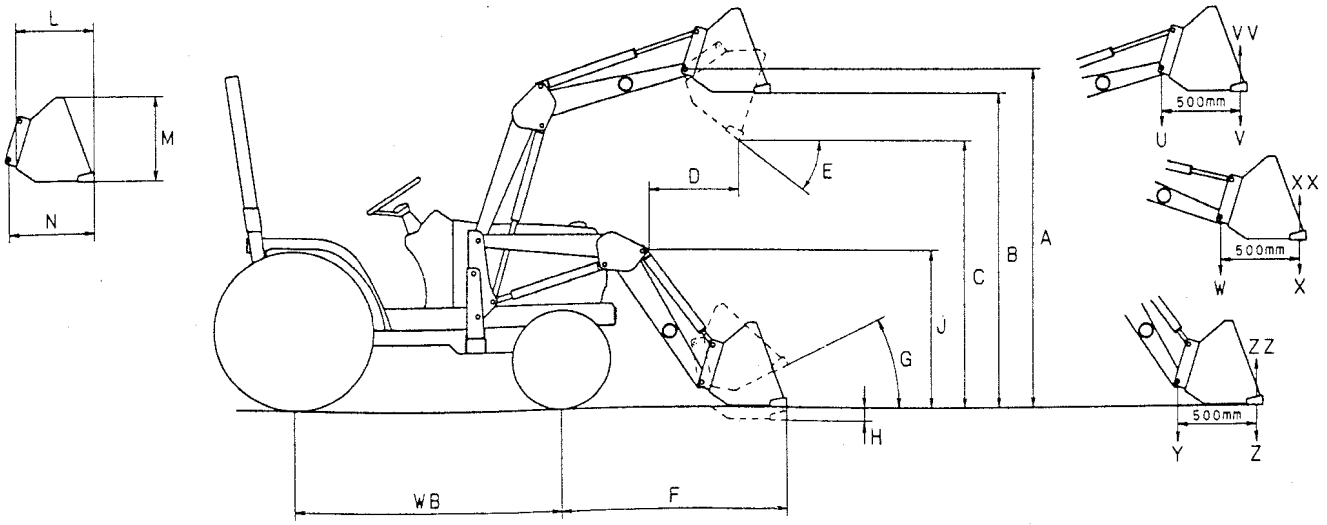

LA482

Lift Capacity

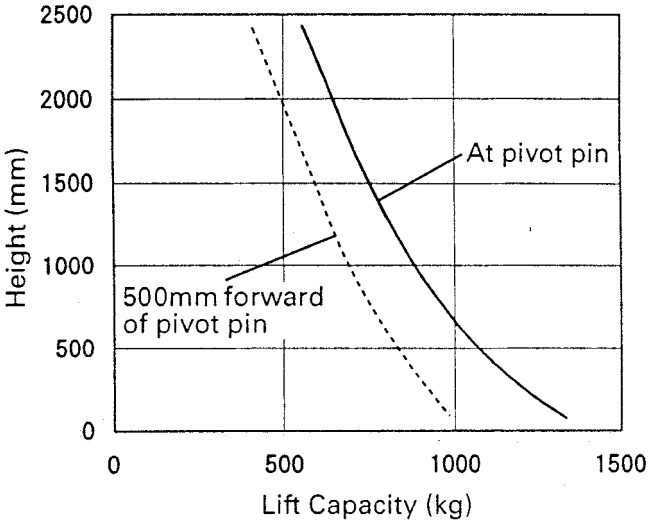

Bucket Rollback Force

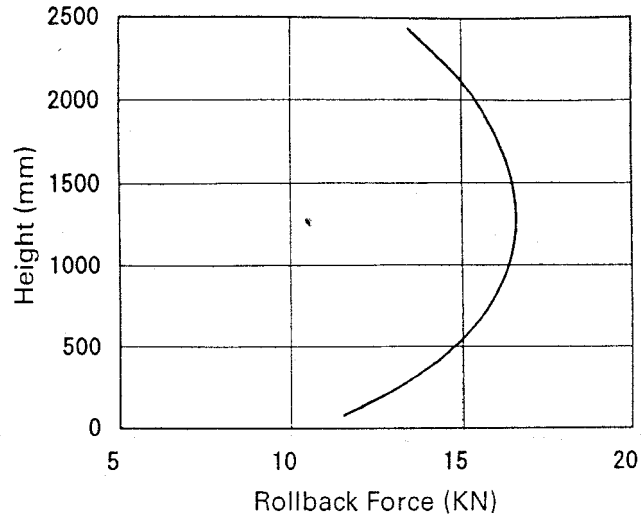

LA682

Lift Capacity

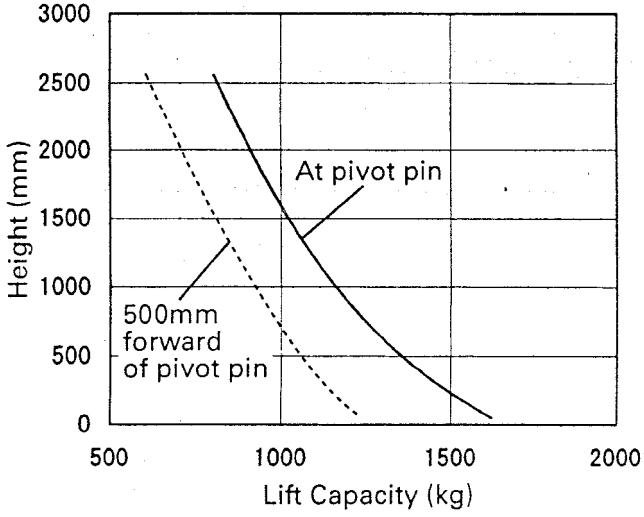

Bucket Rollback Force

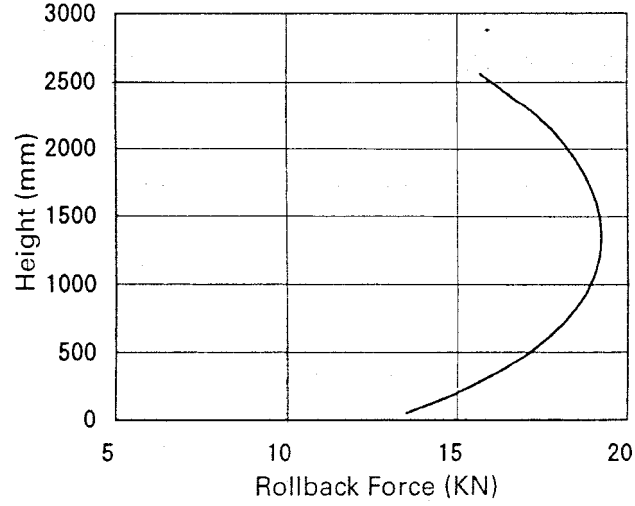

LOADER TERMINOLOGY

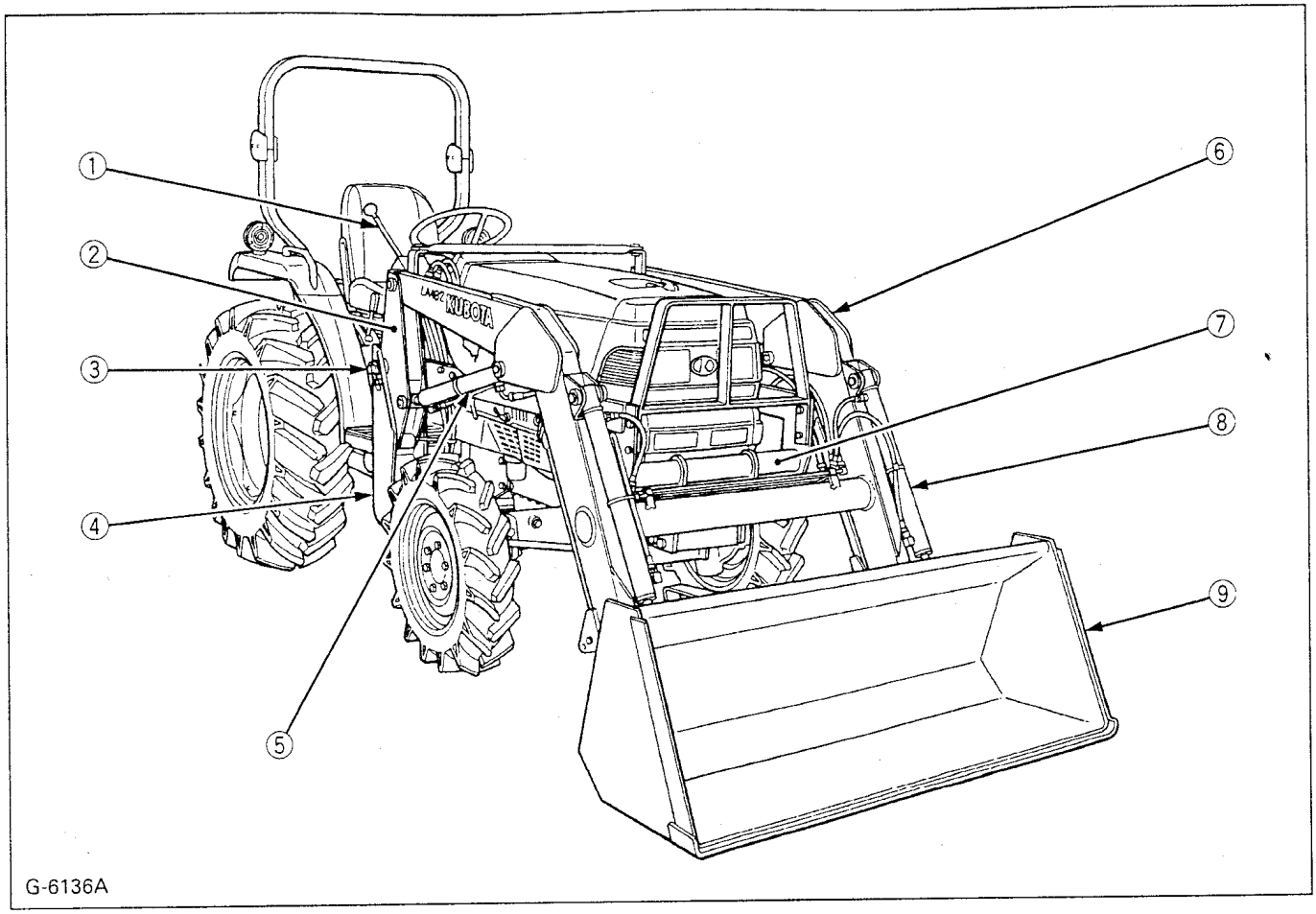

(1) Hydraulic control valve
(2) Side frame
(3) Mounting pin
(4) Main frame
(5) Boom cylinder
(6) Boom
(7) Brace
(8) Bucket cylinder
(9) Bucket

SETTING-UP INSTRUCTIONS

PRE-ASSEMBLY

Remove all loader components. Referring to the illustration, insure that all components have been included.

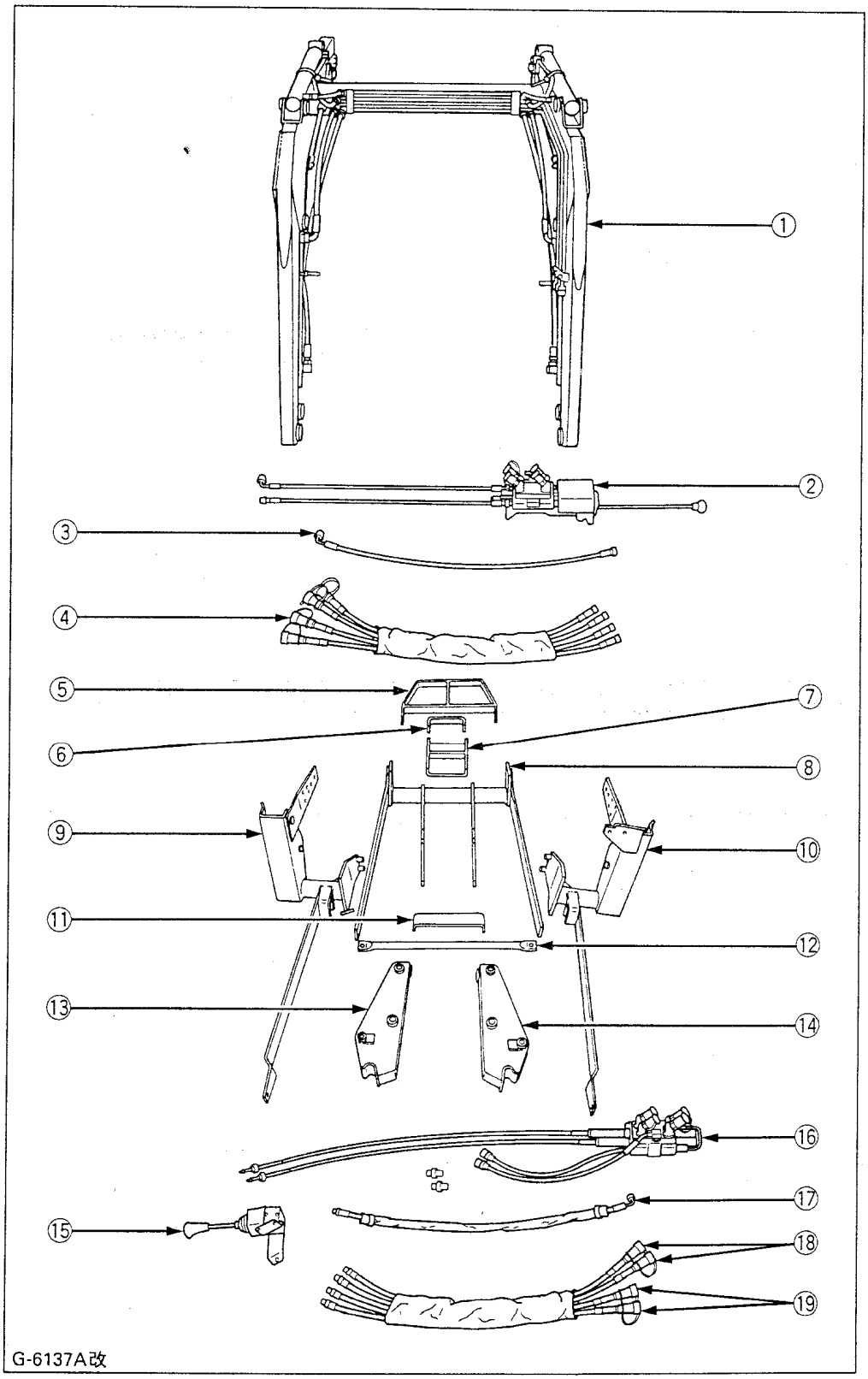

(1) Boom assembly
(2) Control valve assembly
(3) 1-Hose 4, 927 mm (36.5 in.)
(4) 4-Hose 1, 1003 mm (39.5 in.)
(5) Front guard
(6) Weight mounting bar
(7) Front connector
(8) Brace
(9) Main frame LH
(10) Main frame RH
(11) Connector, main frame
(12) Connector, side frame
(13) Side frame LH
(14) Side frame RH
(15) Controller assembly
(16) Control valve assembly
(17) 1-Hose 7, 635 mm (25.0 in.)
(18) 2-Hose 1, 1295 mm (51.0 in.)
(19) 2-Hose 2, 1220 mm (48.0 in.)
(20) Bucket
(Not shown in the illustration)

NOTE:
(2)~(4) : Standard valve type
(15)~(19) : Remote valve type

TRACTOR PREPARATION

1. Set front tread as follows.

	Front Tread	
	2WD	4WD
L3010 L3410	1060 mm (41.7 in.)	Front axle is not adjustable.
L3710 L4310 L4300	1145 mm (45.1 in.)	

IMPORTANT:
- Setting tread wider than recommended may cause premature failure of front axle components due to excessive stress.

2. For better stability, set the rear tread as follows depending on the requirements of the work being done.

	Rear Tread
L3010 L3410	1125 mm (44.3 in.) or more
L3710 L4310 L4300	1180 mm (46.5 in.) or more

INSTALLATION INSTRUCTIONS

IMPORTANT:
- This loader has both standard and metric fasteners. Insure that the proper fasteners are placed in the correct locations.
  Metric fasteners that are marked 8.8 mount to the tractor. The bolts that go only in the loader are standard.
- Do not tighten any bolts firmly until most components are attached to the tractor.
- Before finally tightening all mounting hardware, start the engine and apply down pressure to the bucket until the loader raises the front wheels slightly, and make sure that the mounting pins can be rotated easily.
  Torque all bolts and nuts in this position.
- To avoid damage to hoses, adjust all connections to route hoses away from sharp edges.
- Assemble on the surface preferably concrete.

Main Frames and Connector

1. Attach the main frame LH and RH to the flywheel housing and tractor front axle frame as shown.

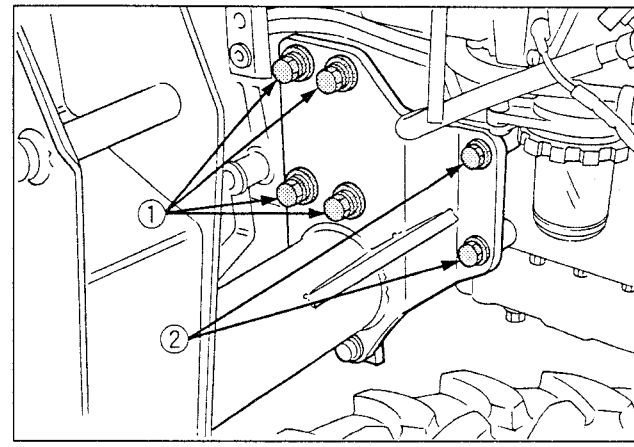

(1) 8-M14×40 bolts
8-9/16 spring lock washers
8-9/16 hardened plain washers
(2) 4-M12×80 bolts
4-M12 spring lock washers

2. **[LA482]**
   Attach the rear of main frames to the stabilizer brackets.
   [LA682]
   Attach the rear of main frames to the case.

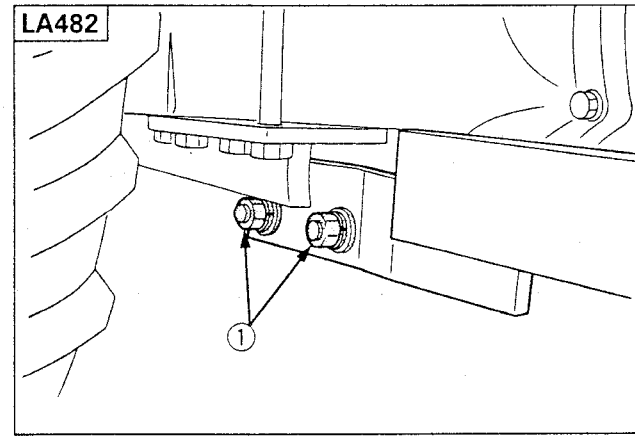

(1) 4-9/16-18UNF×1 1/2 bolts
4-9/16-18UNF nuts
4-9/16 hardened plain washers
4-9/16 spring lock washers

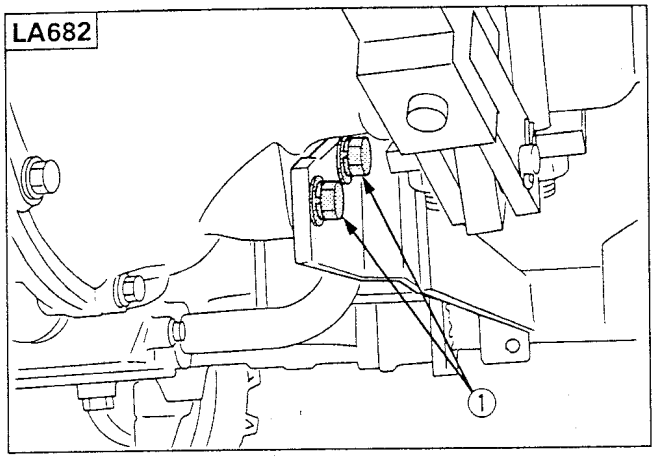

(1) 4-M12×30 bolts
4-M12 spring lock washers
4-1/2 hardened plain washers

3. Attach the connector between the main frame LH and RH.

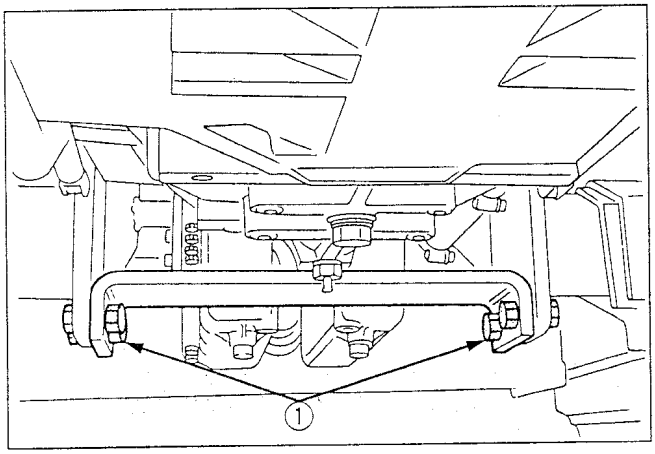

(1) 4-9/16-18UNF× 1 3/4 bolts
4-9/16-18UNF nuts
4-9/16 spring lock washers

Hydraulic Lines

Route the loader inlet, outlet and return hoses as shown in the illustration.

◆ Hydraulic Block Type Outlet

Hydraulic block type outlet is useful when adding hydraulic operated equipment such as : front loader, front blade, etc.

When loader is attached

1. Remove the plugs
2. Route the loader inlet, outlet and return hoses as shown in the illustration.
3. When the loader is attached, turn the control screw groove to **"Vertical"** position.

IMPORTANT:

To avoid overheating and damage to the hydraulic system:

- When the loader is not attached, be sure the control screw groove is turned to **"Horizontal"** position.

When the loader is not attached

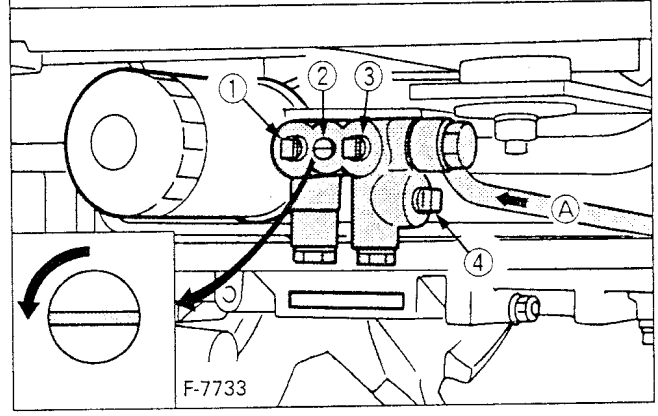

When the loader is attached

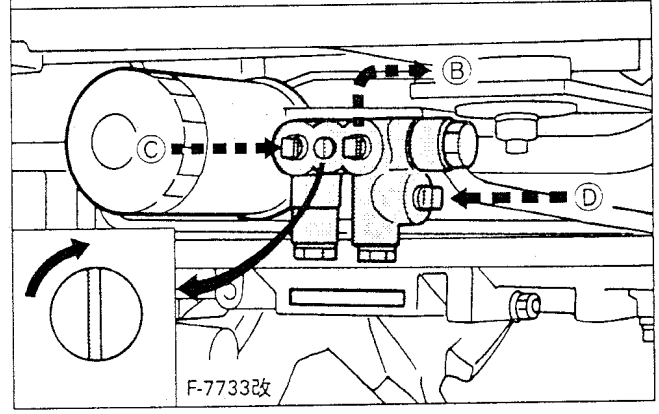

(1) Inlet (plug)
(2) Control screw
(3) Outlet (plug)
(4) Tank port (plug)

(A) From gear pump
(B) To the loader (Inlet)
Max. flow
26.4 L/min. (7.0 U.S. gals./min.)
[L3010, L3410]
29.5 L/min. (7.8 U.S. gals./min.)
[L3710, L4310]
Max. pressure
17.2 Mpa (175 kgf/cm², 2490 psi.)
(C) From the loader (Outlet)
(D) From the loader (Tank port)

1. Remove the plugs from the outlet, inlet and tank port.
2. Install the adapters and Hose 7 to the hydraulic block as shown in the illustration.

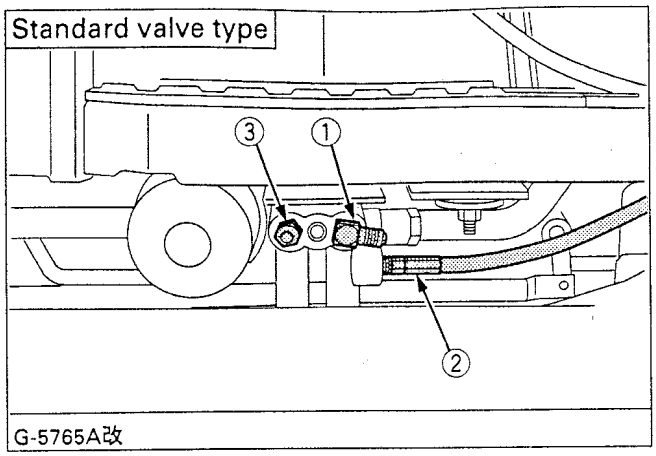

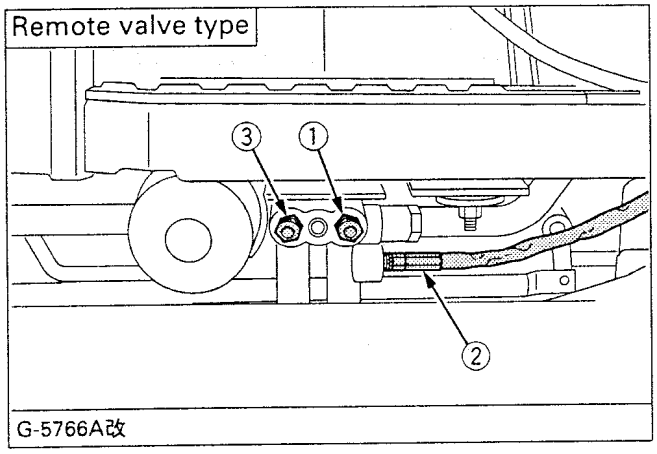

(1) Adapter (Outlet port)
(2) Hose 7 (Tank port)
(3) Adapter (Inlet port)

IMPORTANT:
- Use teflon tape on the tapered thread of the adapters and Hose 7.

Standard valve type

3. Install the control valve assembly to the main frame RH as shown.

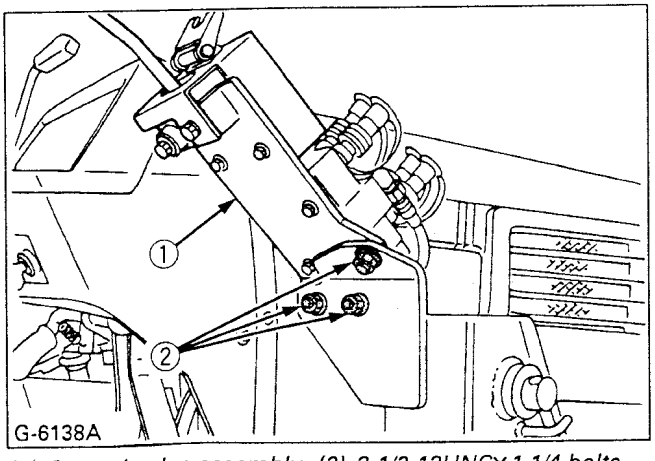

(1) Control valve assembly (2) 3-1/2-13UNC×1 1/4 bolts
3-1/2-13UNC nuts
3-1/2 spring lock washers

4. Connect the "INLET" port on the hydraulic block and "Power beyond" port on the control valve with Hose 5, 1092 mm (43.0 in.).
5. Connect the "OUTLET" port on the hydraulic block and "IN" port on the control valve with Hose 6, 902 mm (35.5 in.).
6. Connect the "TANK" port on the hydraulic block and "OUT" port on the control valve with Hose 7, 927 mm (36.5 in.). Clamp these three hoses together with plastic tie.

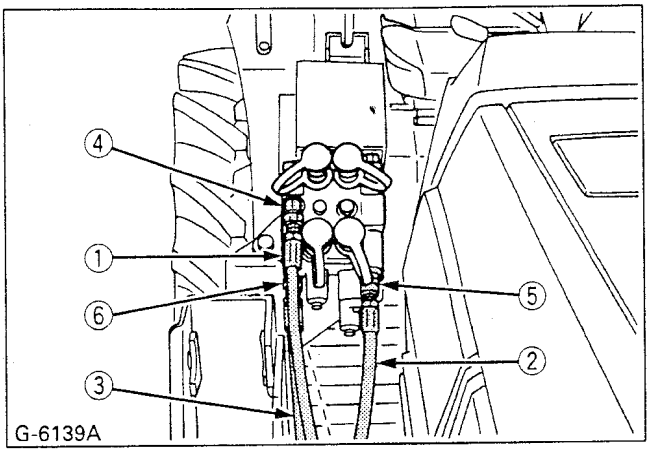

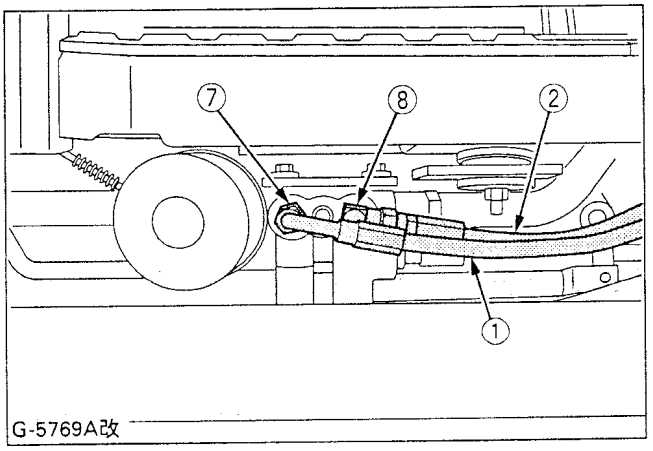

(1) Hose 5
(2) Hose 6
(3) Hose 7
(4) "Power beyond" port
(5) "IN" port
(6) "OUT" port
(7) "Inlet" port
(8) "Outlet" port

IMPORTANT:
- Turn the hose fittings so that the hoses clear adjacent tractor components.

Remote valve type

3. Install the control valve assembly to the main frame RH as shown.

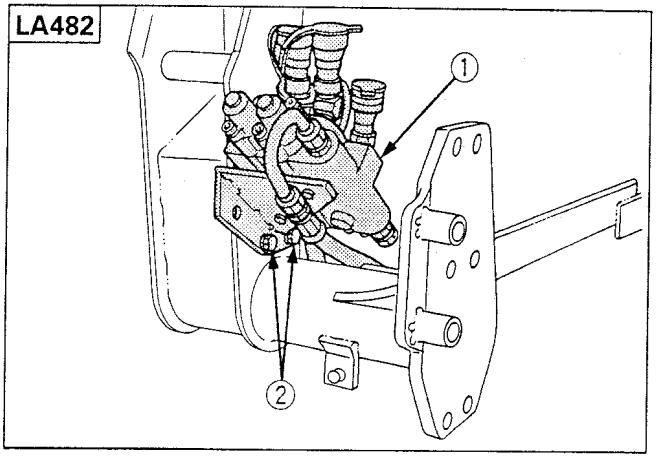

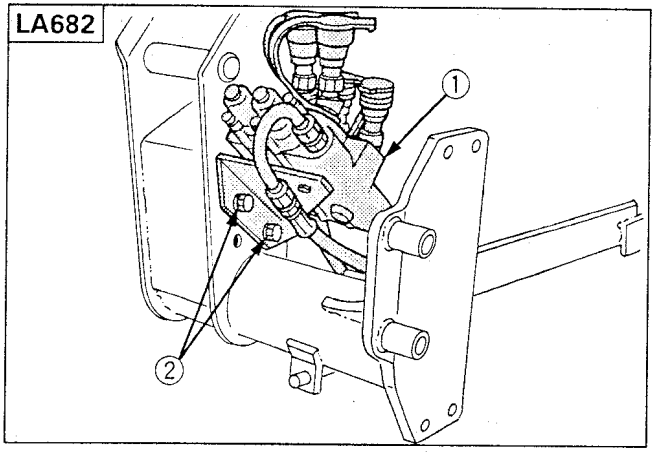

(1) Control valve assembly
(2) 2-1/2-13UNC×1 1/4 bolts
2-1/2 spring lock washers

4. Connect the "TANK" port on the hydraulic block and "OUT" port on the control valve with Hose 7, 635 mm (25.0 in.).
5. Connect the "INLET" port on the hydraulic block and "Power beyond" port on the control valve with Hose 4, 635 mm (25.0 in.).
6. Connect the "OUTLET" port on the hydraulic block and "IN" line tubing on the control valve with Hose 6, 737 mm (29.0 in.).

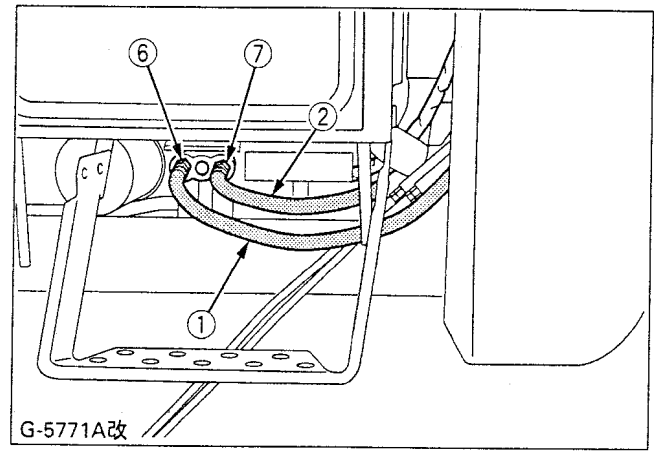

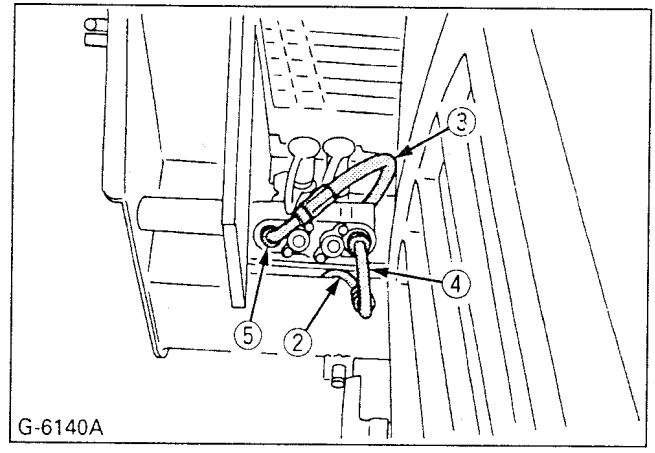

(1) Hose 4
(2) Hose 6
(3) Hose 7
(4) "IN" line tubing
(5) "OUT" port
(6) "Inlet" port
(7) "Outlet" port

IMPORTANT:

- Turn the hose fittings so that the hoses clear adjacent tractor components.

Both valve types

7. Turn the control screw groove to **"Vertical"** position.

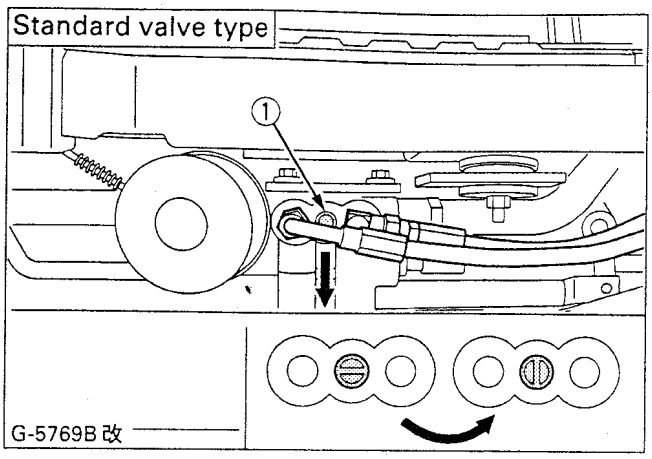

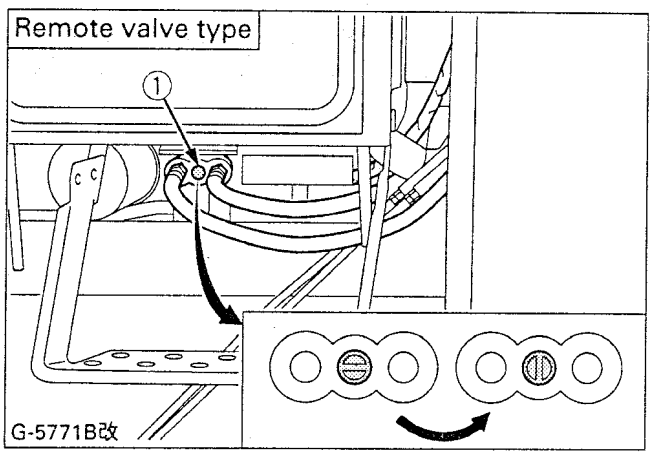

(1) Control screw

Front Connector, Brace and Side Frames

1. Remove the front bumper from the front axle frame.
2. **【LA482】**
   Attach the front connector and brace to the front axle frame.
   【LA682】
   Remove the lower M16 shoulder bolts and M14 bolts from the front axle frame.
   Attach the front connector and brace to the front axle frame.

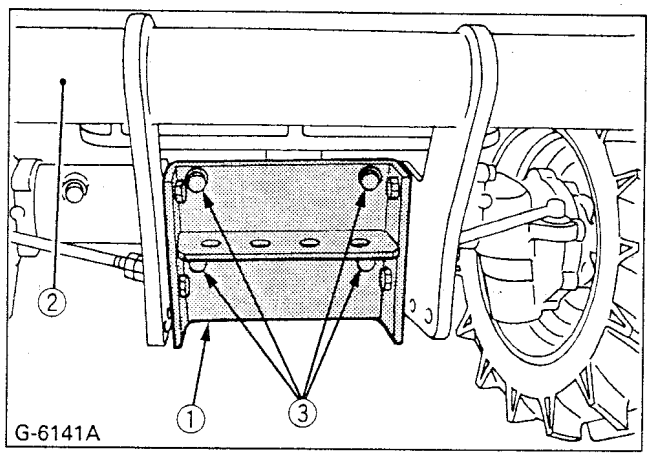

(1) Front connector
(2) Brace
(3) 4-M14×40 bolts
4-9/16 spring lock washers

IMPORTANT:

- Do not use the original M14 bolts and spring lock washers.

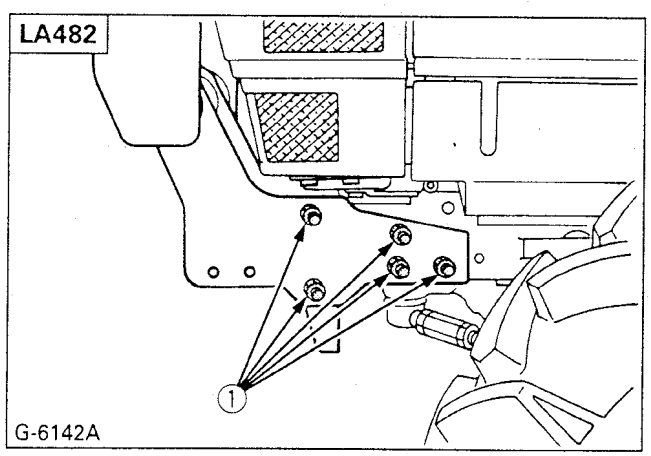

(1) 10-9/16-18UNF×1 3/4 bolts
10-9/16-18UNF nuts
10-9/16 spring lock washers

IMPORTANT:

- Install the 9/16 bolts from the inside.

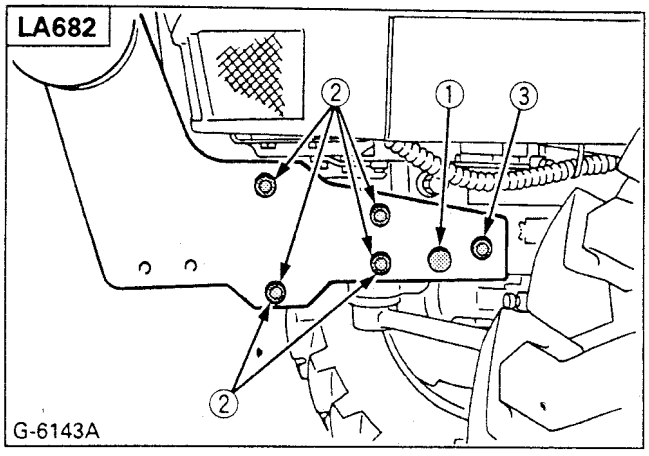

(1) 2-M16x50 bolts
2-5/8 spring lock washers
2-M16x1.5 nuts
(2) 4-9/16-18UNFx2 bolts (LH)
4-9/16-18UNFx1 3/4 bolts (RH)
8-9/16-18UNF nuts
8-916 spring lock washers
(3) 2-9/16-18UNFx2 bolts
2-9/16-18UNF nuts
2-9/16 spring lock washers

IMPORTANT:

- If it is difficult to attach the brace support to the tractor because of the misalignment, loosen M16 bolts on the tractor.
  After attaching the brace support, tighten the upper M16 bolts with 23kgf-m (166 ft-lbs.) torque.
- Install the 9/16 bolts from the inside
- Do not use the original M16 shoulder bolts. M14 bolts, nuts and spring lock washers.

3. Attach the brace to the main frames.

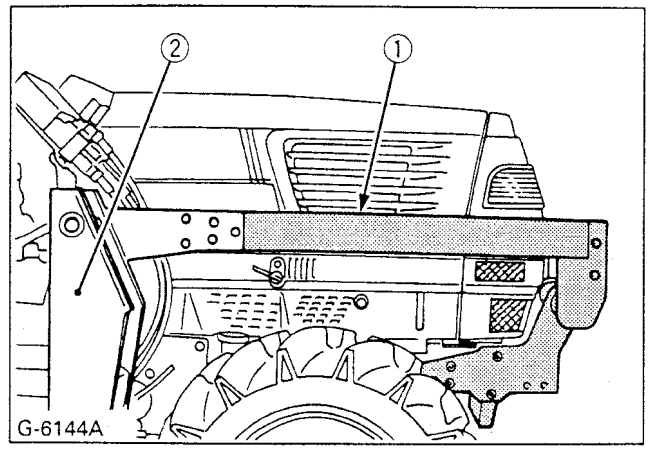

(1) Brace
(2) Main frame

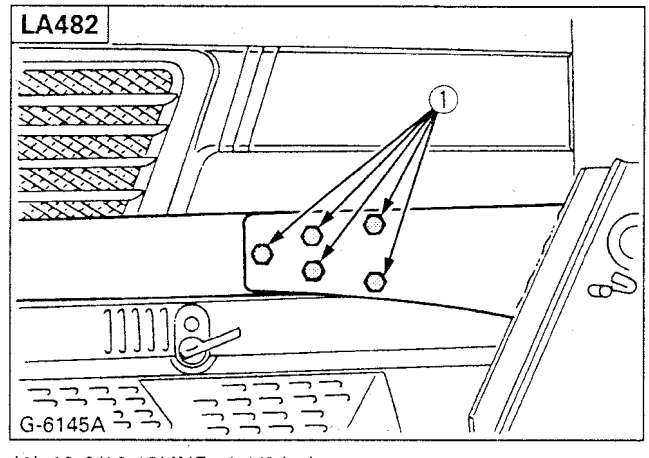

(1) 10-9/16-18UNFx1 1/2 bolts
10-9/16-18UNF nuts
10-9/16 spring lock washers

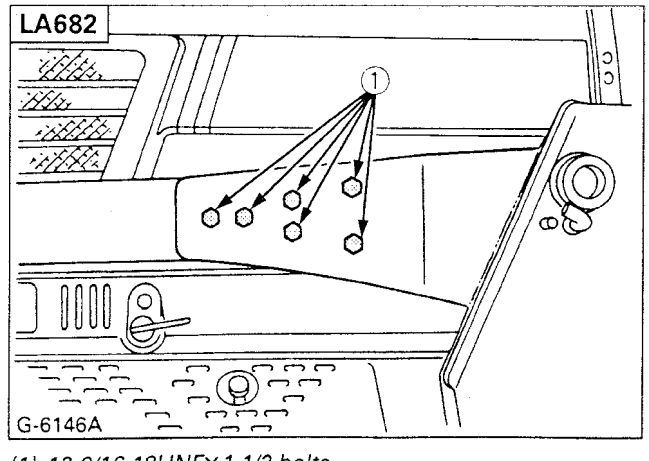

(1) 12-9/16-18UNFx1 1/2 bolts
12-9/16-18UNF nuts
12-9/16 spring lock washers

4. Set the side frame LH and RH onto each main frame. Install mounting pins as shown.

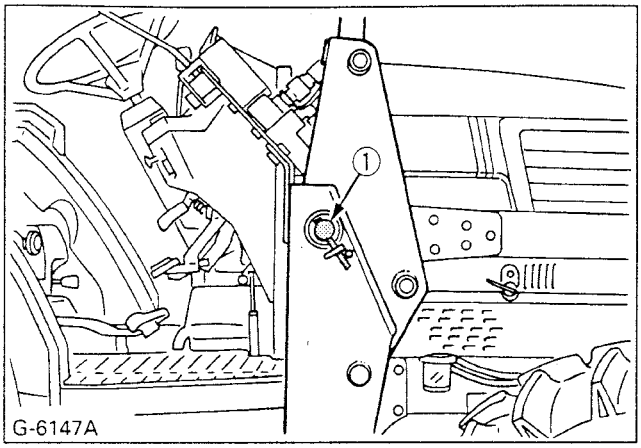

(1) Mounting pin

5. Attach the front guard to the brace.

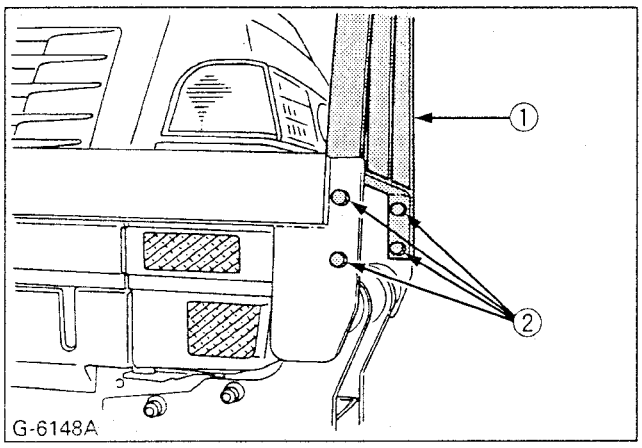

(1) Front guard
(2) 4-9/16-18UNF×1 3/4 bolts
4-9/16-18UNF nuts
4-9/16 spring lock washers

6. Attach the weight mounting bar to the brace as shown.

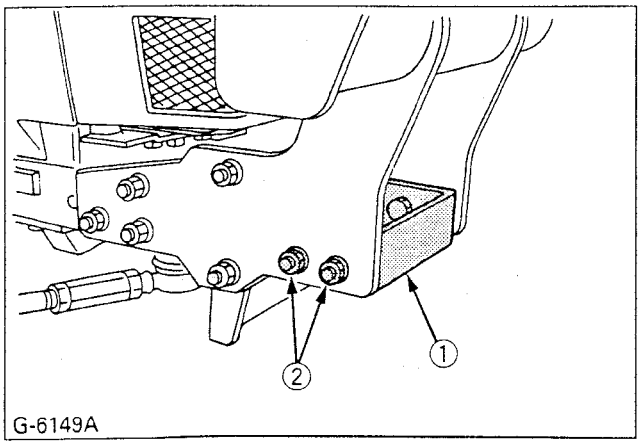

(1) Weight mounting bar
(2) 4-9/16-18UNF×1-1/2 bolts
4-9/16-18UNF nuts
4-9/16 spring lock washers

Boom Assembly

1. Attach the boom assembly and boom cylinders to the side frames as shown.

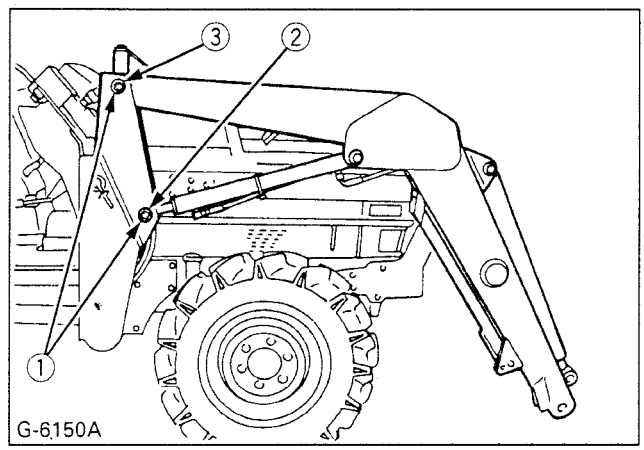

(1) 4-Pin 4 ***[LA482]***
(2) 2-Pin 4 ***[LA682]***
(3) 2-Pin 5 ***[LA682]***

2. Attach the bucket to the boom and bucket cylinders as shown.

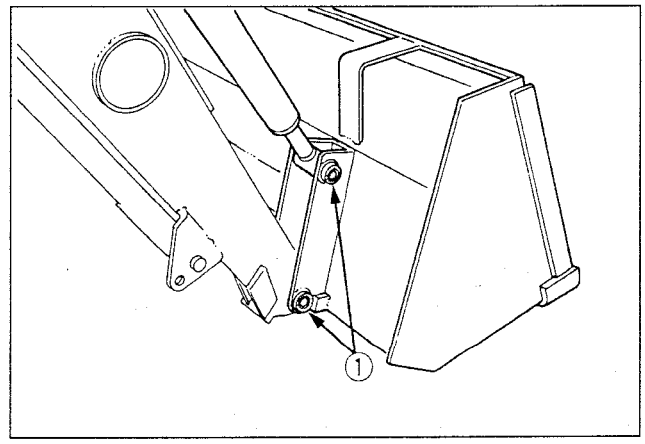

(1) 4-Pin 3
4-1/4-20UNC×2 1/4 bolts
4-1/4-20UNC locking nuts

Connecting Bar

Install connecting bar to the top of side frames.

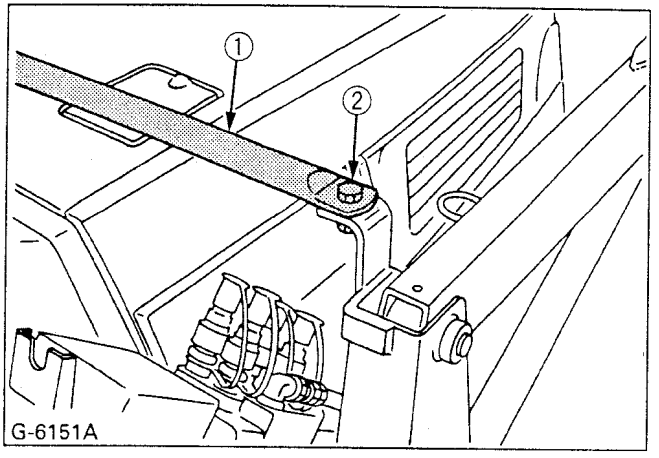

(1) Connecting bar
(2) 2-9/16UNF×1 1/2 bolts
2-9/16UNF nuts
2-9/16 spring lock washers

Hydraulic Hoses

1. Connect the four color coded hoses to the hydraulic tubes on the loader boom.

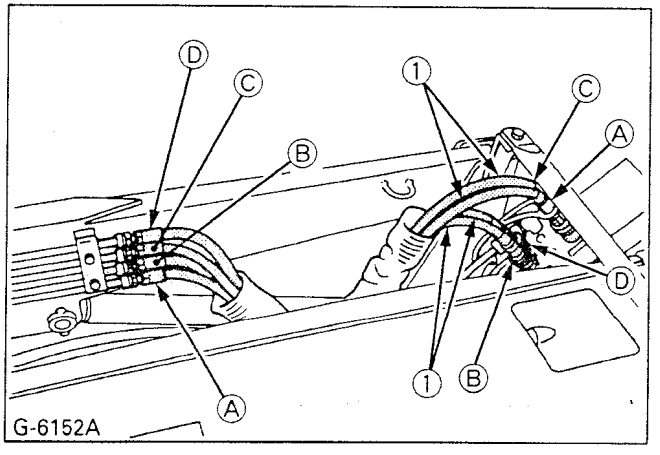

*(1) **[Standard valve type]***
4-Hose1 1003 mm (39.5 in.)
[Remote valve type]
2-Hose1 1295 mm (51.0 in.)
2-Hose 2 1220 mm (48.0 in.)

(A) "WHITE"
(B) "YELLOW"
(C) "BLUE"
(D) "RED"

IMPORTANT:

- For fastening hydraulic hose with tube fitting, use two wrenches. Securely hold the fitting with a wrench, turn the hose with another wrench to avoid damage at the welded area.

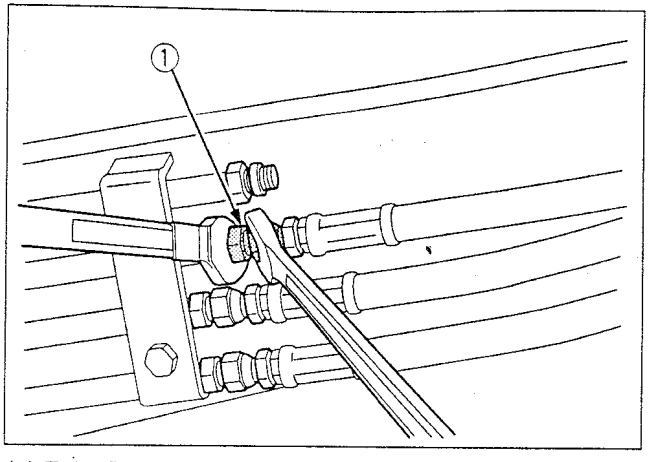

(1) Tube fitting

Remote valve type

Controller Assembly

1. Position the controller assembly to the fender RH approximately 400 mm (15 3/4 in.) high along the fender from the step as shown below. Adjust the location of the controller assembly so that all three mounting holes are utilized and in contact with the fender and then mark the mounting holes.

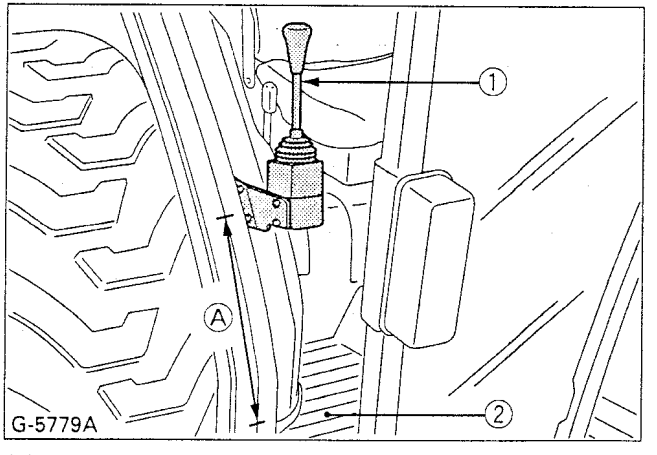

(1) Controller assembly
(2) Step

(A) 400 mm (15 3/4 in.)

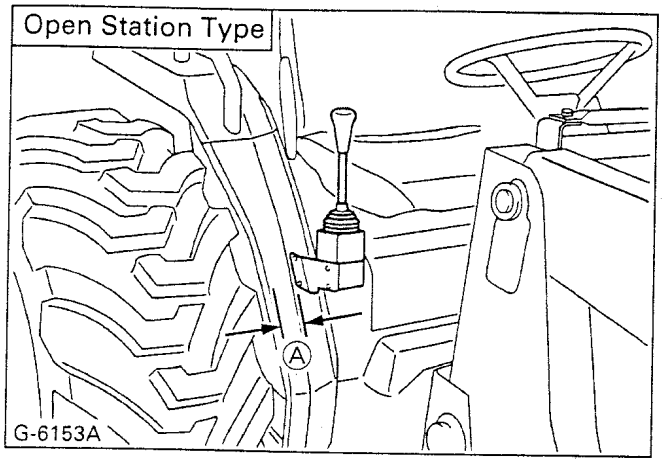

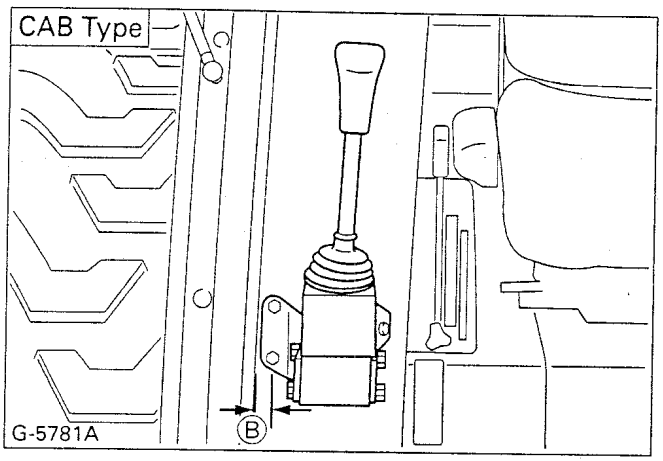

(A) 70 mm (2.8 in.)
(B) 20 mm (0.8 in.)

2. Drill three 3/8 dia. holes and deburr the holes.
3. Fasten the control stand to the fender.

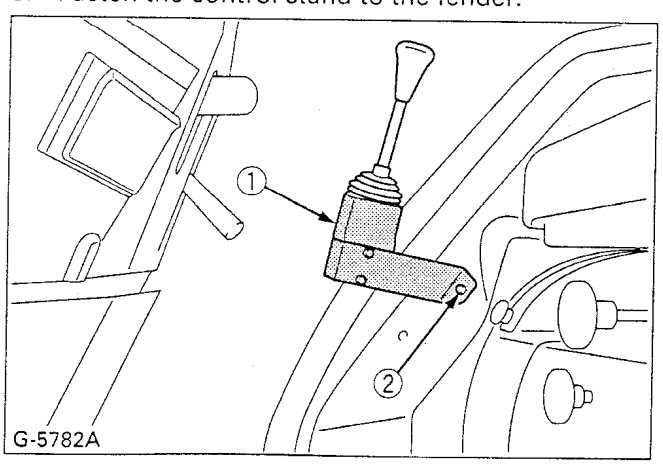

(1) Control stand
(2) 3-5/16-18UNC×1 bolts
3-5/16-18UNC nuts
3-5/16 plain washers
3-5/16 spring lock washers

IMPORTANT:
- Install the plain washers and spring lock washers on the tire side of the fender.

4. Remove the large lock nut from the end of control cables and route them through the holes on the step as shown.

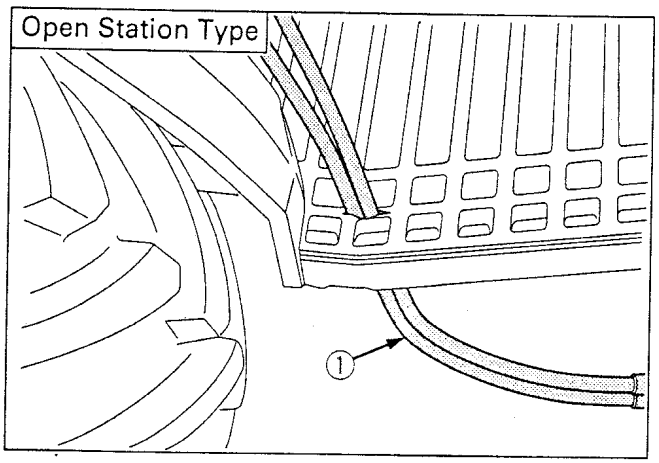

(1) Control cables

NOTE:
- Make a slit in the floor mat for the control cables on ROPS type model tractor as shown.

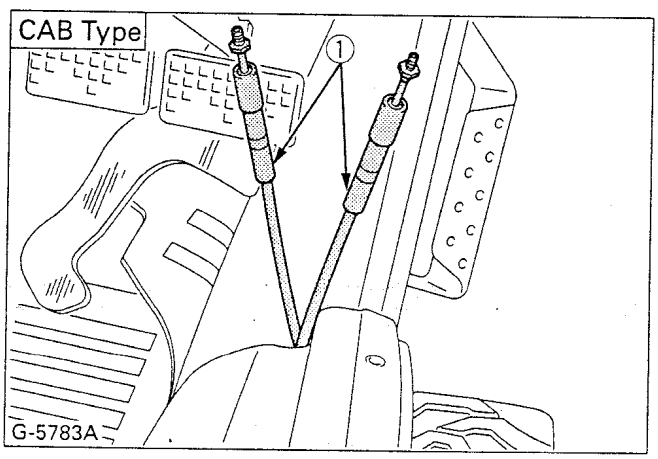

(1) Control cables

5. Slide the rubber boot up the control lever to expose the cable ends. Disassemble the control lever and cable ends from the controller by loosening the socket head cap screw at the control lever pivot.
6. Attach the large lock nuts to the control cables.

7. Screw the control cable ends onto the control cables fully and lock them in place with the lock nuts as shown.

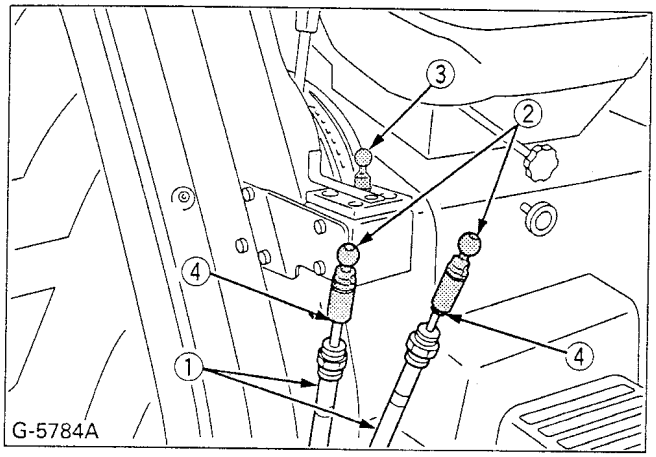

(1) Control cable
(2) Cable end
(3) Control valve pivot
(4) Locknut

8. Screw the cables into the controller and re-attach the control lever as shown.

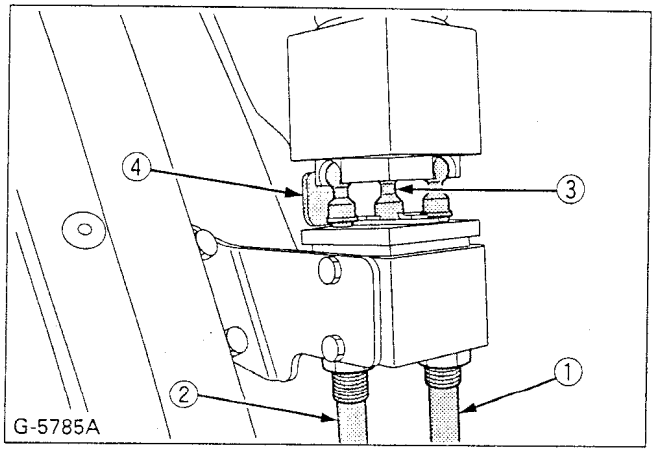

(1) Cable with blue tape for boom section
(2) Cable with red tape for bucket section
(3) Control lever pivot
(4) Lock lever

NOTE:
- To aid in assembly of the control lever, install the boom section cable end first and the bucket section cable end second. Then, connect the control lever to control lever pivot.

9. Tighten the socket head cap screw at the control lever pivot.
10. Adjust the length of each cable so that the bottom of the groove on the cable ends align with the top surface of the controller. The lever lock on the controller should lock the control lever in the neutral position when the cable ends are adjusted correctly.
11. Lock the cable in place with the large lock nuts and reinstall the rubber boot to the controller.
12. Apply the control label in location visible from operator's position.

Tightening Bolts and Nuts

Tighten all bolts and nuts in the following order with required torque.

NOTE:
- Before finally tightening all mounting hardware, start the engine and apply down pressure to the bucket until the loader raises the front wheels slightly, and make sure that the mounting pins can be rotated easily. Tighten all bolts and nuts in this position.

Sequence	Location	Bolt/Nut		Required Torque kgf·m (ft·lbs)	
		LA482	LA682	LA482	LA682
1	Main frame	8-M14 bolts		18.0 (130)	
		4-M12 bolts		9.2 (66.5)	
		4-9/16 nuts	4-M12 bolts	18.0 (130)	9.2 (66.5)
2	Connector	6-9/16 bolts or nuts		18.0 (130)	
3	Front connector	4-M14 bolts		15.0 (108)	
4	Brace	—	2-M16 bolts	—	23.0 (166)
		20-9/16 nuts	22-9/16 nuts	18.0 (130)	
5	Connecting Bar	6-9/16 bolts or nuts		18.0 (130)	

PRE-OPERATION CHECK

LUBRICATION

Lubricate all grease fittings with SAE multipurpose grease.

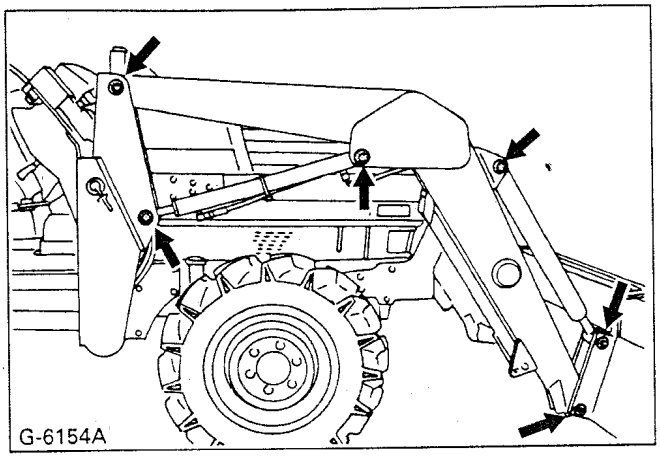

TRANSMISSION FLUID

Check tractor transmission fluid level. Add fluid if necessary. Refer to the tractor operator's manual for instructions and proper fluid. Repeat this check after purging air from the system. At that time, it will be necessary to add transmission fluid.

IMPORTANT:

- To check tractor transmission fluid level, lower the bucket to the ground and lower the 3 point hitch.

REAR BALLAST

CAUTION
To avoid personal injury:

- **For tractor stability and operator's safety, rear ballast should be added to the rear of the tractor in the form of 3-point counter weight and rear wheel ballast. The amount of rear ballast will depend on the application.**

Implement as Counter Weight	
4' Land Scraper	Approx. 225 kg (495 lbs.)
Rear Blade	
Rotary Tiller	Approx. 240 kg (530 lbs.)
Back Hoe	

Liquid Ballast in Rear Tires

Water and calcium chloride solution provides a safe and economical ballast. Used properly, it will not damage tires, tubes or rims. The addition of calcium chloride is recommended to prevent the water from freezing. Use of this method of weighting the wheels has full approval of the tire manufacturers. See your tire dealer for this service.

Liquid weight per tire (75 Percent filled)

*Weight of Tire Liquid (Calcium Chloride)			
Tire size	12.4-24	13.6-24	14.9-24
2 lbs./gal.	130 kg (285 lbs.)	165 kg (365 lbs.)	205 kg (450 lbs.)
3.5 lbs./gal.	135 kg (295 lbs.)	175 kg (385 lbs.)	215 kg (475 lbs.)
5 lbs./gal.	145 kg (320 lbs.)	185 kg (405 lbs.)	225 kg (495 lbs.)

IMPORTANT:

- Do not fill tires with water or solution more than 75% of capacity (to the level of valve stem at 12 o'clock position).

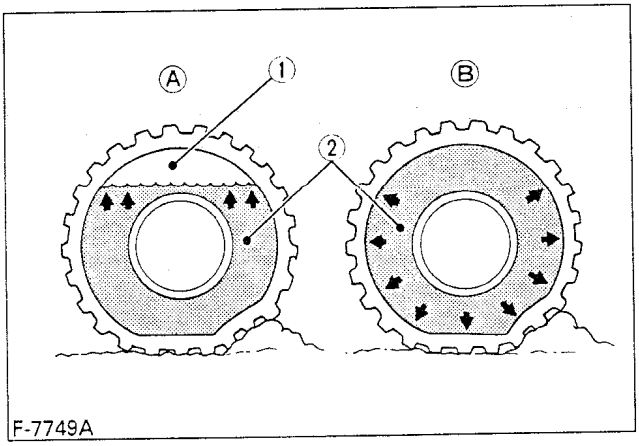

(1) Air — *(A) Correct: 75% Full Air compresses like a cushion*

(2) Water — *(B) Incorrect: 100% Full Water can not be compresseed*

NOTE:

- When mounting a heavy rear implement, liquid in the tires may not be required.

IMPORTANT:

- Do not add liquid ballast or any other weights to the front tires.

TIRE INFLATION

Insure that the tractor tires are properly inflated. Refer to the tractor operator's manual for optional tires.

Inflation pressure

	Tire Sizes	Inflation Pressure
Rear	12.4-24, 4PR	140 kPa (1.4 kgf/cm², 20 psi)
	13.6-24, 4PR	140 kPa (1.4 kgf/cm², 20 psi)
	14.9-24, 4PR	140 kPa (1.4 kgf/cm², 20 psi)
Front	5.00-15, 4PR	325 kPa (3.3 kgf/cm², 46 psi)
	6.00-16, 4PR	260 kPa (2.6 kgf/cm², 37 psi)
	7.2-16, 4PR	180 kPa (1.8 kgf/cm², 26 psi)
	8.3-16, 4PR	180 kPa (1.8 kgf/cm², 26 psi)

TEST OPERATION

WARNING

To avoid serious personal injury:

- **Keep engine speed at low idle during the test operation.**
- **Escaping hydraulic fluid under pressure can have sufficient force to penetrate skin, causing serious personal injury. Before disconnecting lines, be sure to relieve all pressure. Before applying pressure to system, be sure all connections are tight and that lines, tubes and hoses are not damaged. Fluid escaping from a very small hole can be almost invisible. Use a piece of cardboard or wood, rather than your hands to search for suspected leaks. If injured by escaping fluid, see a doctor at once. Serious infection or allergic reaction will develop if proper medical treatment is not administered immediately.**

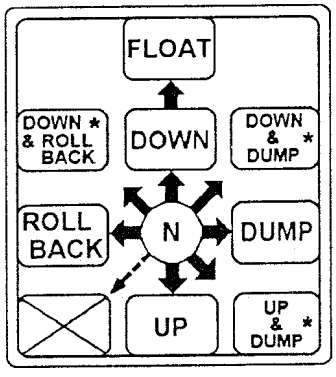

NOTE:

- When the lever is at each corner position marked by asterisk (*), boom and bucket cylinders work at the same time. However, the position marked by cross is not recommended for scooping because of insufficient lift force.

To begin test operation, slightly move the control lever from the "N" position. Slowly raise the loader boom just enough for the bucket to clear the ground when fully dumped. Slowly work through the dump and roll back cycles.

IMPORTANT:

- If the boom or bucket does not work in the directions indicated on the label, lower the bucket to the ground, stop the engine, and relieve all hydraulic pressure. Recheck and correct all hydraulic connections.

Remote valve type

This loader control valve has two stage dump positions. The first dump position by moving the lever to the right is the "Regular" dump position. It has good power and control for precise dumping. This position should be used when operating another implement with the loader's control valve. The second dump position (to further right) features greater speed for dumping. These two positions are separated by a "Feel" position for your convenience.

REMOVING AIR FROM HYDRAULIC SYSTEM

Repeat raising and lowering the boom and bucket operations until all the air is removed from the system and the system responds properly.

IMPORTANT:

- Do not move the control lever into float position when the bucket is off the ground.

OPERATING THE LOADER

The loader should be operated with the tractor engine speed depending on the application and the operator's level of experience. Excessive speeds are dangerous, and may cause bucket spillage and unnecessary strain on the tractor and loader.
When operating in temperatures below –1°C(30°F), run the tractor engine below 1200 min^{-1}(rpm) until the oil temperature exceeds –1°C(30°F).
The following text and illustrations offer suggested loader and tractor operating techniques.

CAUTION
To reduce the possibility of roll over:
- **It is not recommended that the loader be attached when operating another implement on a hillside.**

IMPORTANT:
- When operating the loader in rough terrain, remove the mower to avoid damage to the mower.

FILLING THE BUCKET

Approach and enter the pile with a level bucket.

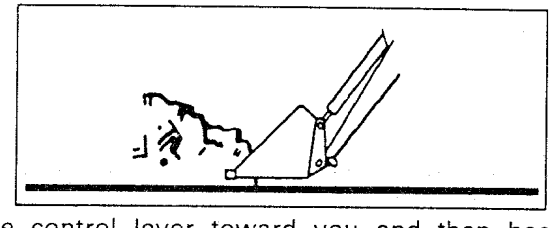

Ease control lever toward you and then back to rollback and lift the bucket.

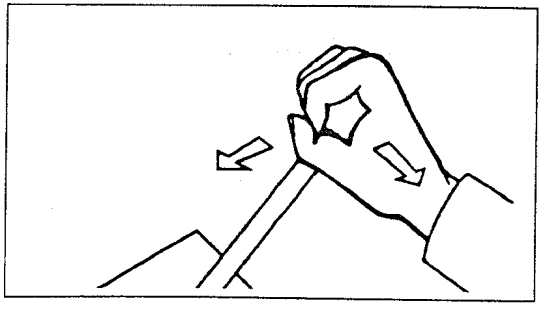

The rollback and lifting of the bucket will increase efficiency because a level bucket throughout the lifting cycle resists bucket lift and increases breakaway effort.

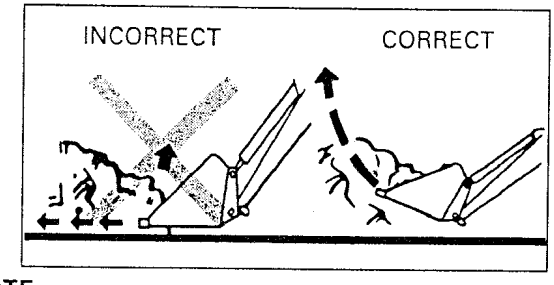

NOTE:
- Do not be concerned if the bucket is not completely filled during each pass. Maximum productivity is determined by the amount of material loaded in a given period of time. Time is lost if two or more attempts are made to fill the bucket on each pass.

LIFTING THE LOAD

When lifting the load, keep the bucket positioned to avoid spillage.

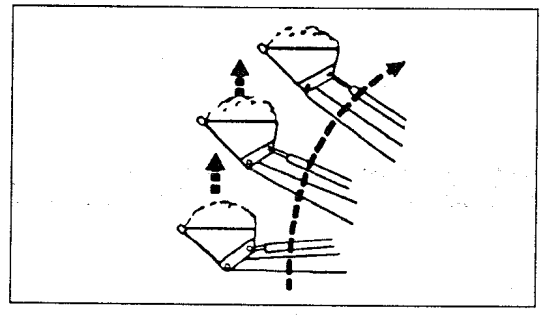

WARNING
To avoid serious personal injury:
- **Do not attempt to lift bucket loads in excess of the loader capacity.**
- **Before raising the bucket to full height, make sure the tractor is on level ground. If not, it may tip over, even if the tractor is not moving.**

CARRYING THE LOAD

Position the bucket just below the level of the tractor hood for maximum stability and visibility, whether the bucket is loaded or empty.

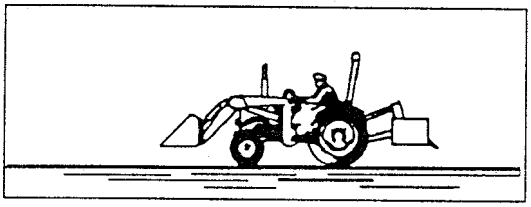

Use extreme care when operating the loader on a slope. Keep the bucket as low as possible. This keeps the bucket and tractor center of gravity low and will provide maximum tractor stability.

WARNING
To avoid serious personal injury:
- **Be extra careful when working on inclines.**
- **When operating on a slope, always operate up and down the slope, never across the slope.**

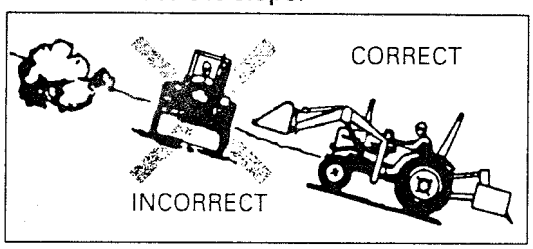

When transporting a load, keep the bucket as low as possible to avoid tipping, in case a wheel drops in a rut.

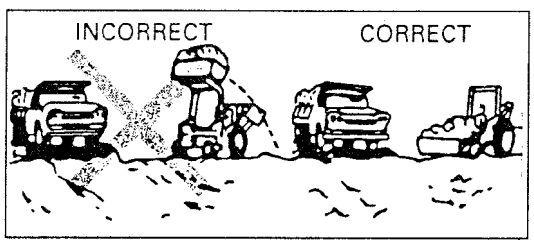

DUMPING THE BUCKET

Lift the bucket just high enough to clear the side of the vehicle. Move the tractor in as close to the side of the vehicle as possible, then dump the bucket.

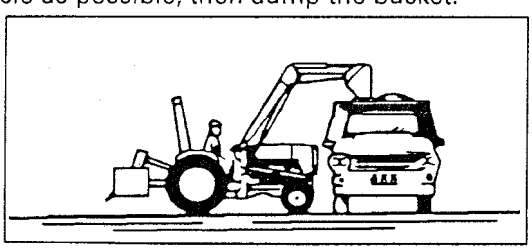

LOWERING THE BUCKET

After the bucket is dumped, back away from the vehicle while lowering and rolling back the bucket.

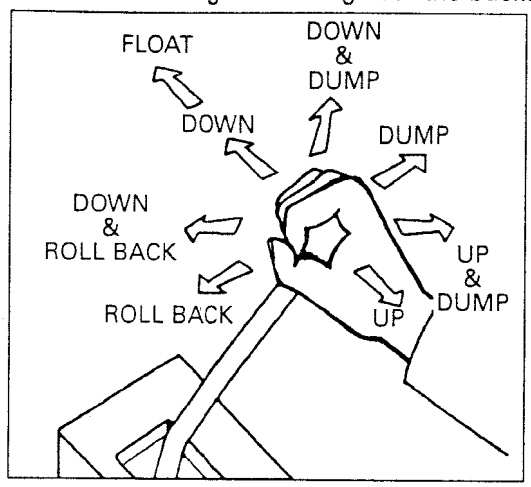

OPERATING WITH FLOAT CONTROL

During operation on hard surface, keep the bucket level and put the lift control in the float position to permit the bucket to float on the working surface.
If hydraulic down pressure is exerted on the bucket it will wear faster than normal.

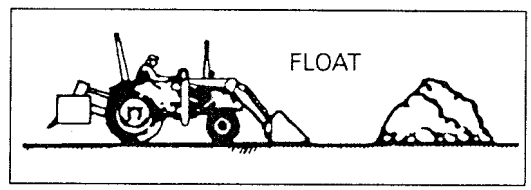

The float position will also avoid mixing of surface material with stockpile material. The float position will reduce the chance of surface gouging while removing snow or other material, or when working with a blade.

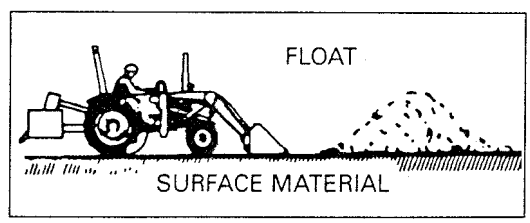

LOADING FROM A BANK

Choose a forward gear that provides a safe ground speed and power for loading.

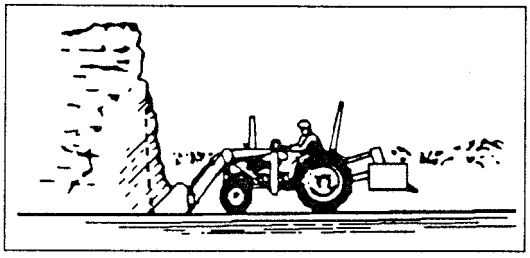

WARNING

To avoid the possibility of serious personal injury:

- **Exercise caution when undercutting high banks.**
- **Dirt slides can be dangerous. Load from as low as possible for maximum efficiency.**

NOTE:

- Loader lift and break-away capacity diminish as loading height is increased.

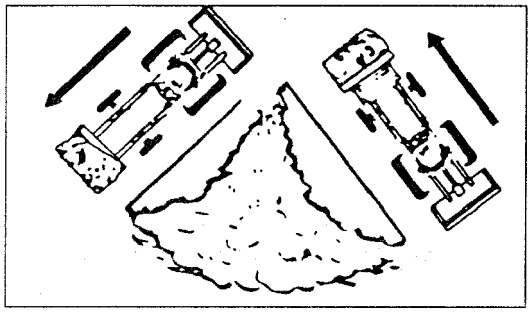

Side cutting is a good technique for cutting down a big pile. Wheel width should not exceed the bucket width for this procedure.

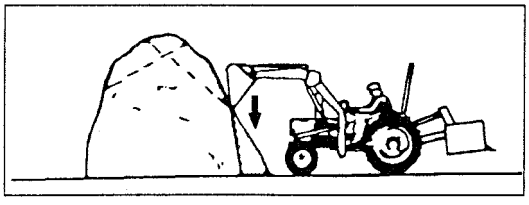

If the pile sides are too high and liable to cause cave-in, use the loader to break down the sides until a slot can be cut over the top.

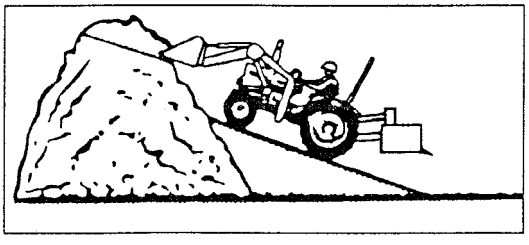

Another method for large dirt piles is to build a ramp to approach to the pile.

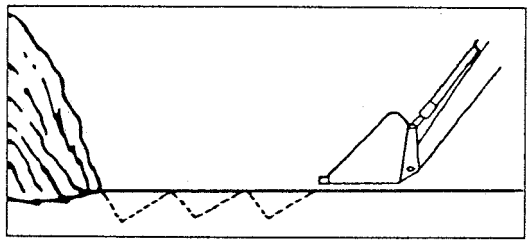

It is important to keep the bucket level when approaching a bank or pile. This will help avoid gouging the work area.

PEELING AND SCRAPING

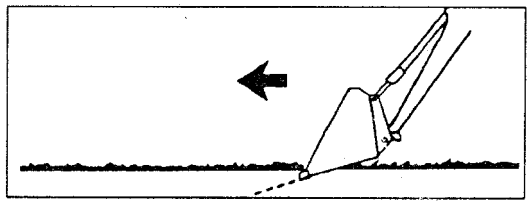

Use a slight bucket down angle, travel forward, and hold the lift control forward to start the cut. Make a short cut and break-out cleanly.

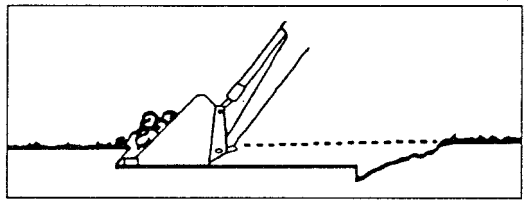

With the bucket level, start a cut at the notch approximately 2 in. deep. Hold the depth by feathering the bucket control to adjust the cutting edge up or down. When the front tires enter the notch, adjust the boom cylinder to maintain proper depth.

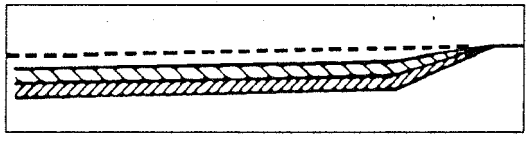

Make additional passes until the desired depth is reached. During each pass, use only the bucket control while at working depth. This will allow you to concentrate on controlling the bucket angle to maintain a precise cut.

LOADING LOW TRUCKS OR SPREADERS FROM A PILE

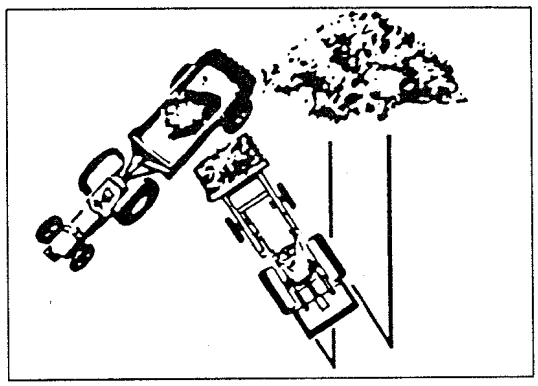

For faster loading, minimize the angle of turn and length of run between pile and spreader.

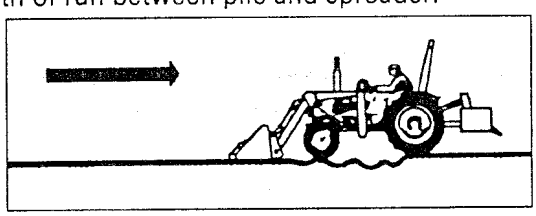

Backgrade occasionally with a loaded bucket to keep the work surface free of ruts and holes. Also, hold the lift control forward so the full weight of the bucket is scraping the ground. Use the heel of the bucket.

BACKFILLING

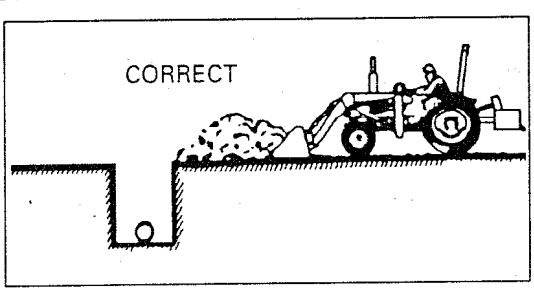

Approach the pile with the bucket flat.

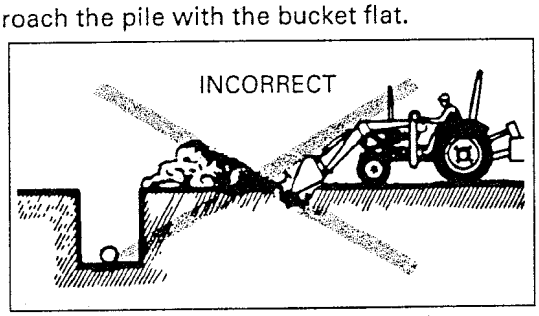

Poor operating methods will move less dirt and make it more difficult to hold a level grade.

IMPORTANT:

- Do not use the bucket in the dumped position for bulldozing. As shown above, this method will impose severe shock loads on the dump-linkage, the bucket cylinders, and the tractor.

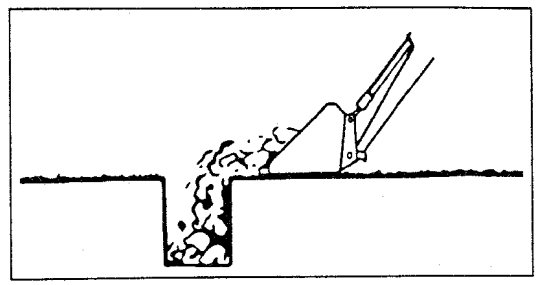

Leave dirt in the bucket because dumping on each pass wastes time.

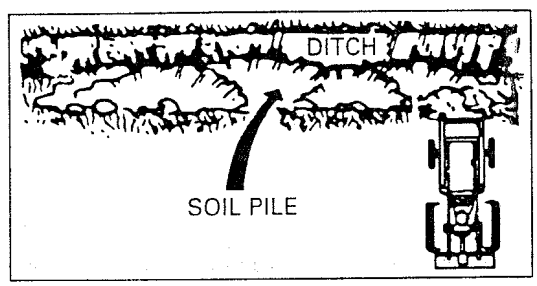

Operate at right angles to the ditch. Taking as big a bite as the tractor can handle.

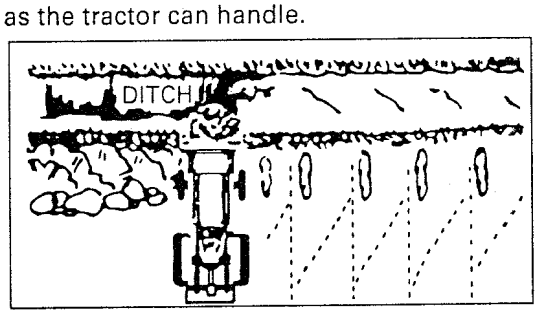

Leave dirt which drifts over the side of the bucket for final cleanup.

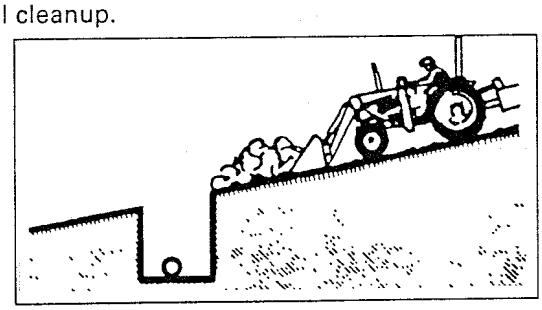

Pile dirt on the high side for easier backfilling on a slope.

HANDLING LARGE HEAVY OBJECTS

DANGER

To avoid serious personal injury or death:

- Handling large, heavy objects can be dangerous due to :
  - (A) Danger of rolling the tractor over.
  - (B) Danger of upending the tractor.
  - (C) Danger of the object rolling or sliding down the loader boom onto the operator.
- If you must perform the above work, protect yourself by :
  - (A) Not lifting the load higher than necessary to clear the ground when moving.
  - (B) Adding rear ballast to the tractor to compensate for the load.
  - (C) Not lifting large objects with equipment that does not have an anti-rollback device.
  - (D) Moving slowly and carefully.
  - (E) Avoiding rough terrain.
  - (F) Keeping transport distance as short as possible and carry the load as low as possible during transport.

MAINTENANCE

LUBRICATION

CAUTION
To avoid personal injury:
- **Be sure to check and service the tractor on a flat place with the bucket on the ground, engine shut off, the key removed and the parking brake on.**

1. Lubricate all 12 grease fittings every 10 hours of operation. Also, lubricate joints of control lever linkage every 10 hours. High quality grease designating "extreme pressure" and containing Molybdenum disulfide is recommended. This grease may specify "Moly EP" on its label.

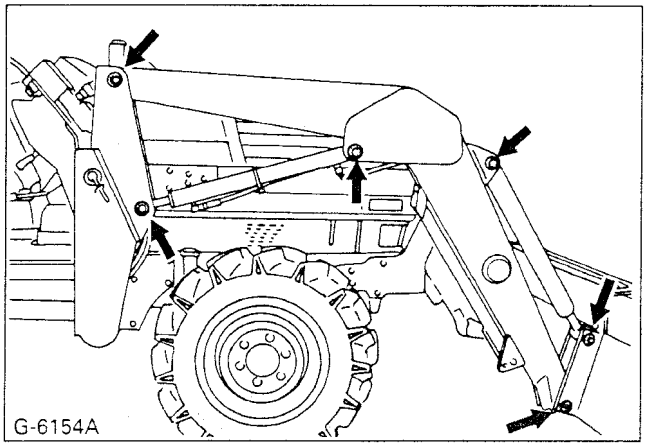

2. Daily before operation, check the tractor hydraulic fluid level. If low, add as described in the tractor operator's manual. Also change the filter element and the hydraulic fluid as recommended in the tractor operator's manual.

RE-TIGHTENING OF HARDWARE

After 20 to 30 hours of initial loader operation, retighten all mounting bolts and nuts to the required torque value as specified in the "Installation Instructions".

DAILY CHECKS

1. Check all hardware daily before operation. Tighten hardware to torque values as specified in the "Installation Instructions" and "Tightening Torque Chart".
2. With the engine off and the bucket on the ground, inspect all hoses for cuts or wear. Check for signs of leaks and make sure all fittings are tight.

WARNING
To avoid serious personal injury:
- **Escaping hydraulic fluid under pressure can have sufficient force to penetrate skin, causing serious personal injury. Before disconnecting lines, be sure to relieve all pressure.**
  Before applying pressure to system, be sure all connections are tight and that lines, tubes, and hoses are not damaged. Fluid escaping from a very small hole can be almost invisible. Use a piece of cardboard or wood, rather than your hands, to search for suspected leaks.

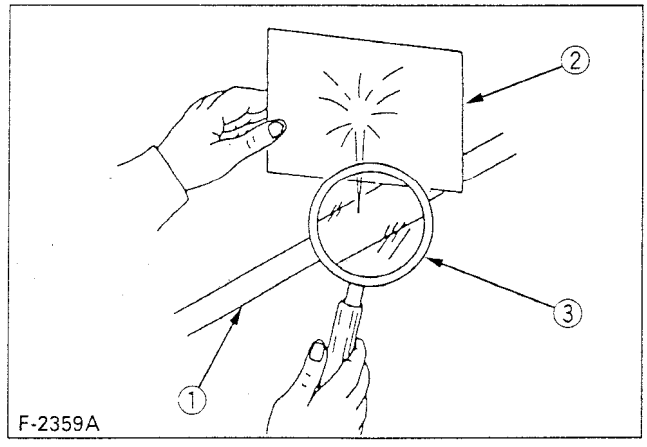

(1) Hydraulic line
(2) Cardboard
(3) Magnifying glass

  If injured by escaping fluid, see a doctor at once. Serious infection or allergic reaction will develop if proper medical treatment is not administered immediately.
- **When removing the engine side covers, be careful not to touch hot loader cylinders.**
  Allow all surfaces to cool before performing maintenance.

General torque specification

American standard cap screws with UNC or UNF threads			Metric cap screws 8.8		
SAE grade No.		GR 5 or GR 8	property class		8.8 Approx. SAE GR 5
1/4	(N-m) (kgf-m) (ft-lbs)	9.8 to 11.7 1.0 to 1.2 7.2 to 8.6	M6	(N-m) (kgf-m) (ft-lbs)	9.8 to 11.2 1.0 to 1.1 7.2 to 8.3
5/16	(N-m) (kgf-m) (ft-lbs)	19 to 23.1 1.9 to 2.4 14 to 17	M8	(N-m) (kgf-m) (ft-lbs)	23.6 to 27.4 2.4 to 2.8 17.4 to 20.2
3/8	(N-m) (kgf-m) (ft-lbs)	33.9 to 40.7 3.5 to 4.2 25 to 30	M10	(N-m) (kgf-m) (ft-lbs)	48.1 to 55.8 4.9 to 5.7 35.5 to 41.2
1/2	(N-m) (kgf-m) (ft-lbs)	88.1 to 105.8 9.0 to 10.8 65 to 78	M12	(N-m) (kgf-m) (ft-lbs)	77.5 to 90.1 7.9 to 9.2 57.2 to 66.5
9/18	(N-m) (kgf-m) (ft-lbs)	122 to 146.4 12.4 to 14.9 90 to 108	M14	(N-m) (kgf-m) (ft-lbs)	124 to 147 12.6 to 15.0 91.2 to 108
5/8	(N-m) (kgf-m) (ft-lbs)	176.3 to 211.5 18.0 to 21.6 130 to 156	M16	(N-m) (kgf-m) (ft-lbs)	196 to 225 20.0 to 23.0 145 to 166

Top of bolt

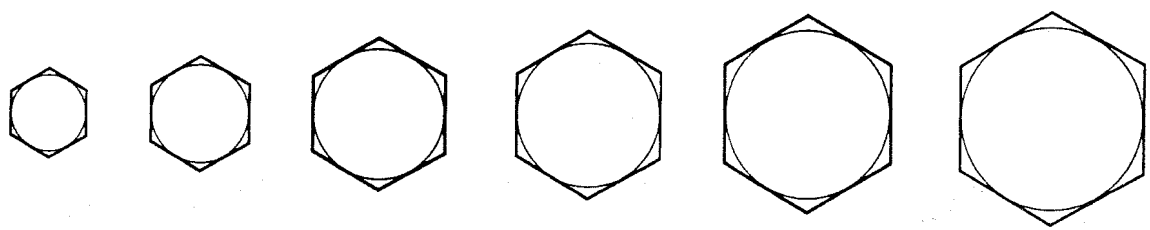

M6 M8 M10 M12 M14 M16

Length

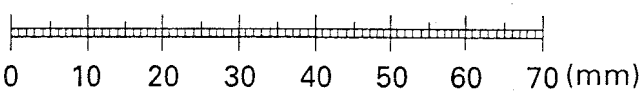

REMOVING THE LOADER

CAUTION
To avoid personal injury:
- **Make sure approved bucket is attached before removing loader from tractor.**
- **For removing the loader, choose flat and hard ground, preferably concrete.**
- **If the ground surface is soft, place suitable planks on the ground for the bucket and stands.**
- **When starting the engine or using the hydraulic control valve, always sit it the operator's seat.**
- **Make sure bucket and stands are at ground level.**

1. Raise the boom until the stands can be rotated.
2. Stop the engine.
3. Remove the spring pins holding the stands to the boom.
4. Rotate the stands until the pin on the stand and hole in the boom are aligned.
   Then slide the stands outward and insert the spring pin as shown.

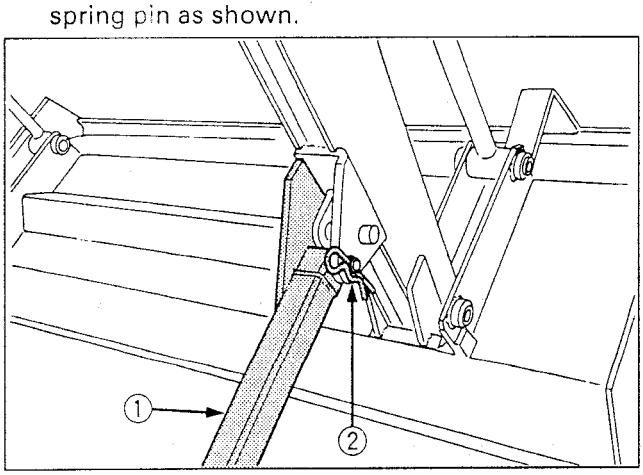

(1) Stand *(2) Spring pin*

5. Start the engine and run at idle.
6. Dump the bucket approximately 20 degrees.
7. Lower the boom and raise the front wheels slightly.

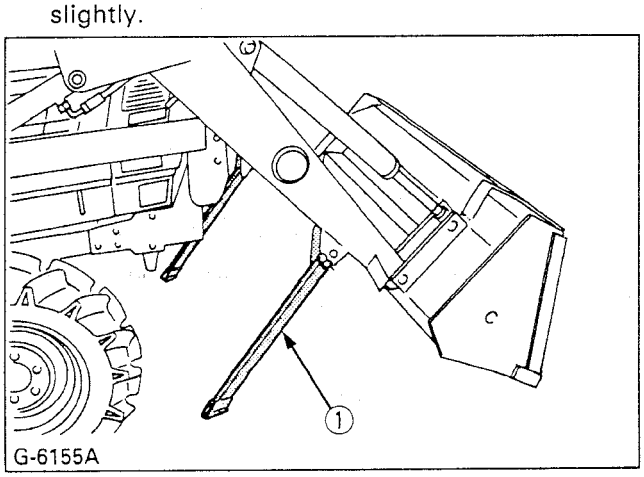

(1) Stand

IMPORTANT:
- Lift the front wheels with the bucket. Do not attempt to lift them with the stands.

8. Stop the engine.
9. Remove the mounting pins from the loader main frame and hold them on the boom.
10. Start the engine and run at idle. Slowly move the hydraulic control lever to rollback position to raise the loader side frames up and out of the receivers of the main frames as shown.

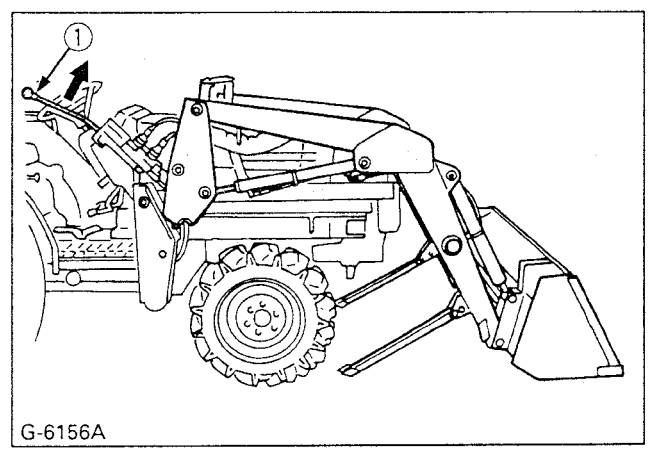

(1) Hydraulic control lever

11. Stop the engine.
12. Slowly release all hydraulic pressure by moving the hydraulic control lever in all directions.
13. Disconnect the four hoses with quick couplers at the control valve and place them on the right side of the boom.
14. Place the protective caps and plugs on the quick coupler ends.

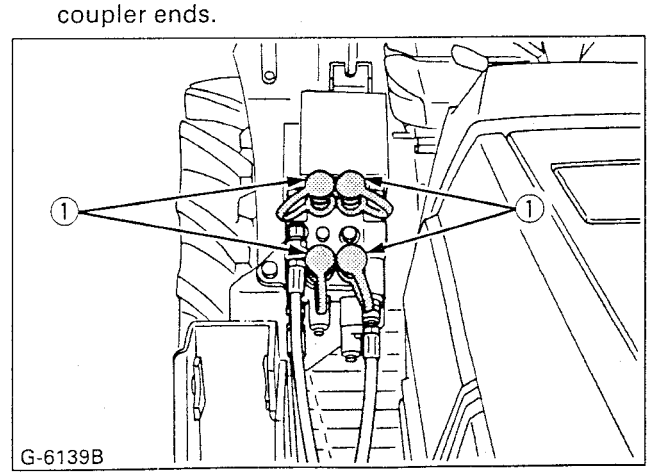

(1) Protective plug

15. Start the engine and slowly back the tractor away from the loader.

STORING THE LOADER

1. Store the loader in a clean dry place.
2. Make sure the loader is properly supported.
3. Attach the protective plugs and caps to the couplers to protect from dust.

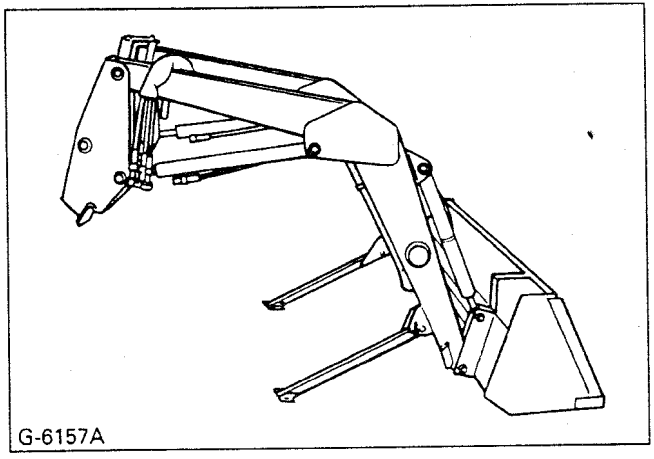

4. Check hydraulic hoses and connections. Repair or replace if necessary.
5. Repair or replace any worn, damaged or missing parts.
6. Lubricate loader as described "LUBRICATION" in Maintenance section.
7. Apply a coat of grease to all exposed cylinder rods and mounting pins to prevent rust.
8. Repaint worn or scratched parts.

REINSTALLING THE LOADER

CAUTION
To avoid personal injury:
- **When starting the engine and operating the control valve, always sit in the operator's seat.**

1. Slowly drive the tractor between the loader side frames until the rear portion of both side frames touches the main frames as shown.

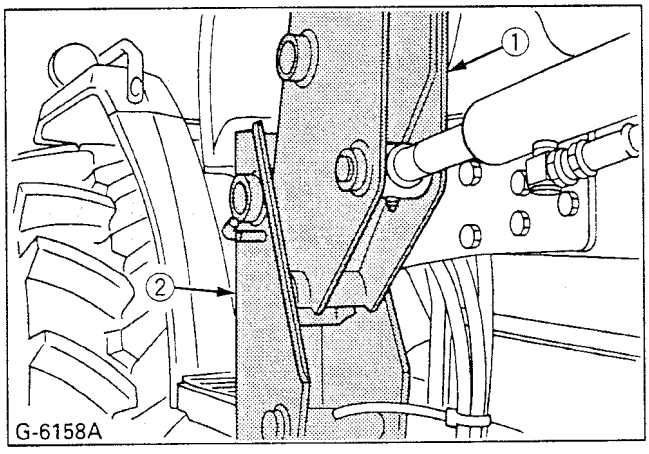

(1) Side frame
(2) Main frame

2. Stop the engine.
3. Connect four hoses with couplers to the nipples on the control valve as indicated with color marks. Then connect the protective caps and plugs to each other.

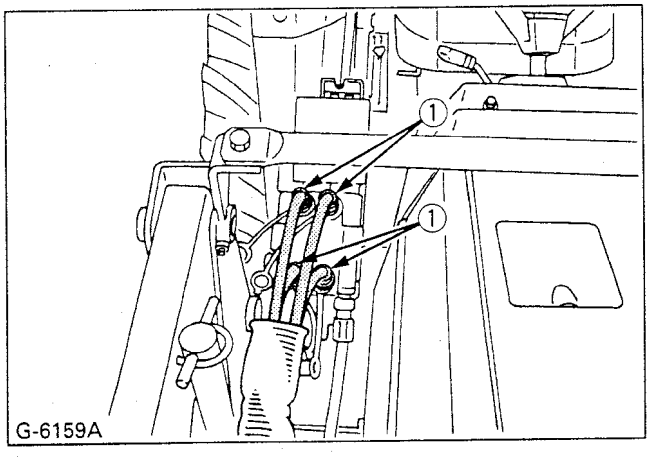

(1) Hoses

4. Start the engine and run at idle.
5. Slowly move the hydraulic control lever to dump position to lower the side frames into the main frames and engage the bosses of the side frames to the guide plates of the main frames. Then lift the front wheels slightly with the loader.

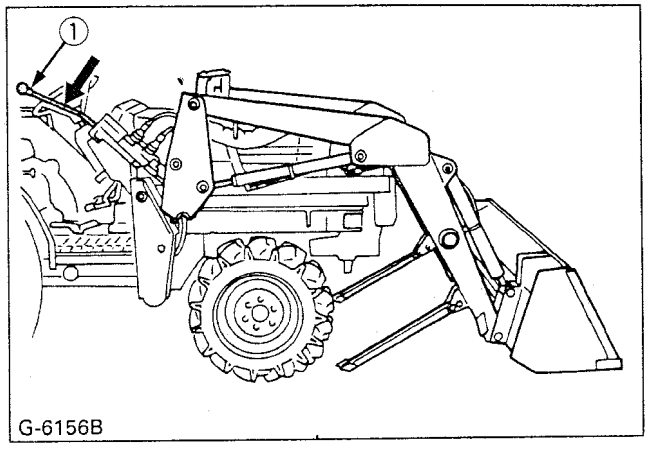

(1) Hydraulic control lever

IMPORTANT:
- Do not attempt to lift the front wheels with the stands.

6. Stop the engine. Reinstall the mounting pins and secure them with the locking rods.
7. Start the engine.
8. Raise the boom until the stands can be rotated.
9. Stop the engine.
10. Store the stands to their original positions and secure them with the spring pins as shown.

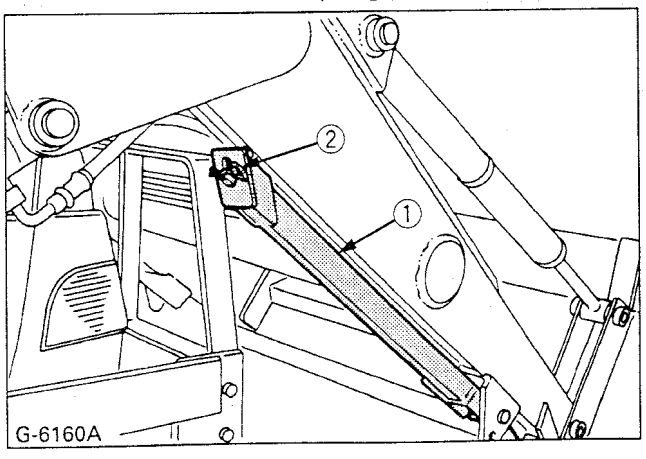

(1) Stand
(2) Spring pin

11. Start the engine.
12. Lower the boom and level the bucket.

KUBOTA Corporation is · · ·

Since its inception in 1890, KUBOTA Corporation has grown to rank as one of the major firms in Japan.

To achieve this status, the company has through the years diversified the range of its products and services to a remarkable extent. Nineteen plants and 16,000 employees produce over 1,000 different items, large and small.

All these products and all the services which accompany them, however, are unified by one central commitment. KUBOTA makes products which, taken on a national scale, are basic necessities. Products which are indispensable. Products which are intended to help individuals and nations fulfill the potential inherent in their environment. KUBOTA is the Basic Necessities Giant.

This potential includes water supply, food from the soil and from the sea, industrial development, architecture and construction, and transportation.

Thousands of people depend on KUBOTA's know-how, technology, experience and customer service. You too can depend on KUBOTA.

Kubota

U.S.A. : **KUBOTA TRACTOR CORPORATION**
3401 Del Amo Blvd., Torrance, CA 90503, U.S.A.
Telephone : (310)370-3370
Western Division : 6665 E. Hardaway Rd., Stockton, CA 95215
Telephone : (209)931-5051
Central Division : 14855 FAA Blvd., Fort Worth, TX 76155
Telephone : (817)571-0900
Northern Division : 2626 Port Road, Columbus, OH 43217
Telephone : (614)492-1100
Southeast Division : 1025 Northbrook Parkway, Suwanee, GA 30024
Telephone : (770)995-8855

Canada : **KUBOTA CANADA LTD.**
5900 14th Avenue, Markham, Ontario, L3S 4K4, Canada
Telephone : (905)294-7477
Delta Distribution Center : 7979 82nd St, Delta B.C. V4G 1L7
Telephone : (604)940-6061
Drummondville Distribution Center : 5705 Place Kubota, Drummondville, Québec, J2B 6B4
Telephone : (819)478-7151

France : **KUBOTA EUROPE S.A.**
19-25, Rue Jules Vercruysse, Z.I. BP88, 95101 Argenteuil Cedex, France
Telephone : (33)1-3426-3434

Germany : **KUBOTA (DEUTSCHLAND) GmbH**
Senefelder Str. 3-5 63110 Rodgau /Nieder-Roden, Germany
Telephone : (49)6106-873-0

U.K. : **KUBOTA (U.K.) LTD.**
Dormer Road, Thame, Oxfordshire, OX9 3UN, U.K.
Telephone : (44)1844-214500

Australia : **KUBOTA TRACTOR AUSTRALIA PTY LTD.**
100 Keilor Park Drive, Tullamarine, Victoria 3043 Australia
Telephone : (61)-3-9279-2000

Malaysia : **SIME KUBOTA SDN. BHD.**
Lot pt 11101 Kompleks Sime Darby, Jalan Kewajipan,
Subang Jaya, 47600 Petaling Jaya, Selangor Darul Ehsan, West Malaysia
Telephone : (60)3-736-1388

Philippines : **KUBOTA AGRO-INDUSTRIAL MACHINERY PHILIPPINES, INC.**
155 Panay Avenue, South Triangle Homes, 1103 Quezon City, Philippines
Telephone : (63)2-9201071

Taiwan : **SHIN TAIWAN AGRICULTURAL MACHINERY CO., LTD.**
16, Fengping 2nd Rd, Taliao Shiang Kaohsiung 83107, Taiwan R.O.C.
Telephone : (886)7-702-2333

Brazil : **KUBOTA BRASIL LTDA.**
Rua Dona Maria FIdelis No.171, Diadema, São Paulo, Brazil
Telephone : (55)11-745-4744

Indonesia : **P.T. KUBOTA INDONESIA**
JALAN. Setyabudi 279, Semarang, Indonesia
Telephone : (62)-24-472849

Thailand : **THE SIAM KUBOTA INDUSTRY CO., LTD.**
101/19-24 Navanakorn, Tambol Klongneung, Amphur Klongluang, Pathumtani 12120, Thailand
Telephone : (66)2-529-0363

Egypt : **KUBOTA Corporation CAIRO LIAISON OFFICE**
12th Floor, Nile Tower Bldg.
21-23 Guiza Street, Guiza, Egypt
Telephone : (20)2-5702390

英語(U.S.A.)
Code No. 7J243-6911-2

PRINTED in the U.S.A.