Dennis Henny

OPERATOR'S & PARTS MANUAL

KUBOTA®

B2650 & B2660

Snowblower

B2650
S/N 70300996

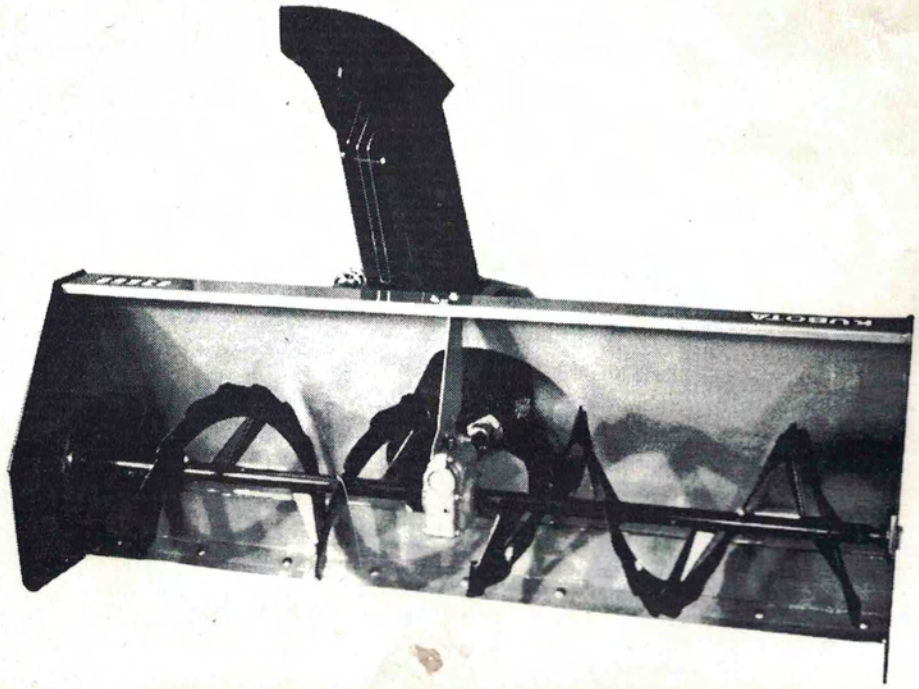

FORM 70000-70413 8/96

TABLE OF CONTENTS

B2650 & B2660 SNOWBLOWER

SAFETY PRECAUTIONS 2
- Before Operation 2
- During Operation 2
- Maintenance 3

SAFETY SIGNS 4
- Safety Sign Locations 4
- Care of Safety Signs 4
- Sign Illustrations & Part Numbers 5

SPECIFICATIONS 6

INTRODUCTION 7
- Using this Manual 7
- Application 7
- Serial Number Information 7

TRACTOR PREPARATION 8
- Steering Stop Plate Installation 8
- 3-Point Hydraulic Control Valve Return Spring Instructions 9

SUB-FRAME INSTALLATION 10
- Installing the Sub-Frame 10
  - Units using 3-point hydraulics or the B2056 Valve Kit 10
  - Units with Front Loader 11
  - All Unit Combinations 11
- Installing Handle Support 13
- Hydraulic Connections 14
  - Units using 3-point hydraulics 14
  - Units using B2056 Valve Kit , or units with Front Loader 15
- Seasonal Service 15

HYDRAULIC ADJUSTMENTS 16
- Adjusting 3-point Hydraulic Valve Return Spring 16

ADDITIONAL INFORMATION 17
- Drive Shield Exchange 17

SNOWBLOWER INSTALLATION 18
- Fastening to the Lift Frame 18
- Installing the Chute 18
- Installing the Chute Handle 19
- Connecting the Driveshafts 20
- Skid Shoe Adjustment 21

TORQUE TIGHTENING CHART 22
- Standard Torque Application Chart 22
- Special Torque Applications 22

LUBRICATION & MAINTENANCE 23
- Lubrication 23
- Daily Maintenance 23
- Snowblower Adjustments 23
  - Skid Shoes 23
  - Drive Chain 24
  - Chute Deflector 24

OPERATING INSTRUCTIONS 25
- Operating Controls 25
  - Chute Rotation 25
  - Lifting & Lowering 25
  - Snowblower Drive 25
- Preparing for Snow Removal 25
- Removing Snow 26
- Transporting the Snowblower 27

PARTS ILLUSTRATIONS 29
- Housing, Auger & Fan Components 30
- Drive Components 32
- Discharge Chute Components 34
- Gearbox Components 36
- Sub-Frame Components 38
- Hydraulic Lift Components 40
- Driveshaft Components 42
- Miscellaneous Components 44

NUMERICAL INDEX 46

SAFETY PRECAUTIONS

DANGER-WARNING-CAUTION: *THESE WORDS AND THIS SAFETY ALERT SYMBOL IDENTIFY IMPORTANT SAFETY MESSAGES WITHIN THIS MANUAL. CAREFULLY READ THE MESSAGE THAT FOLLOWS THE SYMBOL. FAILURE TO UNDERSTAND AND OBEY A SAFETY WARNING, OR RECOGNIZE A SAFETY HAZARD, COULD RESULT IN AN INJURY TO YOU OR OTHERS AROUND YOU. THE OPERATOR IS ULTIMATELY RESPONSIBLE FOR THE SAFETY OF HIMSELF, AS WELL AS OTHERS, IN THE OPERATING AREA.*

All KUBOTA products are designed to give safe, dependable service if operated according to instructions. **Read and understand this manual before operation.** It is the owners responsibility to be certain everyone operating this product reads this manual, and the tractor manual, to become familiar with this equipment and all safety precautions. Failure to do so could result in serious personal injury or equipment damage. If you have any questions, consult your KUBOTA Dealer.

KUBOTA recommends the use of a ROPS (Roll Over Protective Structure) and seat belt in almost all applications. Never fasten the seat belt without a ROPS. Do not modify a ROPS in any way. Welding, bending, drilling or cutting any portion of the ROPS may weaken the structure. Do not repair a damaged ROPS. A damaged ROPS structure must be replaced, not repaired or revised. If any structural member is damaged, replace the entire structure at your local KUBOTA Dealership. Check the seat belt daily and replace it if damaged or frayed.

BEFORE OPERATION

NEVER ALLOW ANY CHILDREN to operate the snowblower. Only trained adults should operate or service this equipment. Know how to stop the unit and disengage controls quickly. Know and understand all snowblower safety precautions, including those in the tractor manual before set-up, service, or operation.

ALWAYS wear suitable hearing protection such as earplugs or earmuffs, AND adequate safety glasses or safety goggles, when operating the snowblower.

Never wear loose or extremely bulky clothing around the snowblower. This type of clothing may catch on moving parts, causing serious personal injury or death. Always wear boots that will improve footing on icy surfaces.

Operate only during daylight hours or when the area is well lit with bright artificial light.

Make sure the tractor is counterweighted for snowblower use as recommended by your KUBOTA Dealer. Weights provide the necessary balance to prevent loss of control and possible tip-over.

DURING OPERATION

Do not permit anyone to ride on the snowblower unit while in operation or transport. THERE IS NO SAFE PLACE FOR PASSENGERS ON THIS EQUIPMENT. Operate the snowblower from the operator's seat ONLY.

Make sure the PTO (Power Take Off) is in the NEUTRAL position BEFORE starting the engine.

Insure that all bystanders, especially SMALL CHILDREN AND PETS, are WELL CLEAR of the snowblower before engaging the PTO and lowering the unit. NEVER allow anyone to be in front of the snowblower during operation. Contact with moving parts may cause serious injury or death.

BEFORE beginning EACH operation, make sure the auger and fan are cleared of any ice that may have formed while the snowblower was not in use.

Be extremely careful when working on slippery or icy surfaces, and on uneven or sloping walks or drives. DO NOT clear snow on steep slopes. Do not clear snow across the face of slopes. Exercise extreme care when turning on slopes.

Be extremely alert when operating the snowblower in confined areas. Direct the discharge chute angle and direction away from glass windows, parked automobiles, traffic ways, and away from all bystanders and pets.

During operation, DO NOT put hands or feet near the auger or blower fan. KEEP CLEAR of the discharge chute opening at all times.

Readjust the snowblower housing skid shoes to clear gravel, crushed rock, sidewalk seams, etc., BEFORE EACH operation. Exercise extreme caution when operating in these conditions as gravel and rock can be thrown causing bystander injury or property damage.

Thoroughly inspect the area where the snowblower is to be used and remove all door-mats, sleds, boards, and other foreign objects. During operation, pay careful attention for objects that may enter the blower and be thrown. Inspect the snowblower after striking any object to insure that all snowblower parts are not damaged.

Park the unit on level ground, disengage the PTO, lower the snowblower to full ground contact, wait for all rotating components to stop, set the parking brake, shut off the engine and remove the key, BEFORE leaving the operator's seat, or BEFORE leaving the unit unattended.

To avoid injury, DO NOT adjust, unplug, or service the snowblower with the PTO engaged or with the engine running.

With the engine SHUT OFF, use a wooden broom stick, or similiar piece of wood (approx. 36 inches in length) to clear or unplug the discharge opening. NEVER place hands into the discharge opening. Very serious injury, including amputation, may result.

Make sure the snowblowing unit is equipped with a Slow Moving Vehicle (SMV) sign, and be alert for other traffic when operating near, or when crossing public roads and highways. Be extra alert when backing the snowblower.

Always run the snowblower for a few minutes after snow removal to prevent freeze-up of the auger and blower fan.

Never drive the tractor at transport speeds without first disengaging the PTO and raising the snowblower to its full transport height.

MAINTENANCE

ALL snowblower repairs, service, or adjustment, MUST be performed with the PTO disengaged and the engine shut off.

Check shear bolts and other critical fasteners at frequent intervals to insure the snowblower is in safe operating condition.

Do not work under the tractor or snowblower unless they are securely supported. Make sure all hoists, floor jacks and jackstands are in good working order and have sufficient capacity to support the elevated equipment before repair or maintenance is performed.

Make sure all shields and guards are securely in place, especially those on and around the snowblower driveshaft and chain drives, following all cleaning, service, or repair work.

Replace any safety signs that are damaged, lost or have otherwise become illegible. Replace all signs after repainting. If a part to be replaced has a safety sign on it, obtain a new sign from your KUBOTA Dealer and install it in the same location on the new part.

Do not modify or alter the snowblower, or permit anyone else to modify or alter the snowblower or any of its components or operating functions. If you have any questions about modifications, contact your KUBOTA Dealer.

Always make sure the snowblower is completely serviced according to all applicable Operator's Manual instructions before storage.

SAFETY SIGNS

SAFETY SIGN LOCATIONS

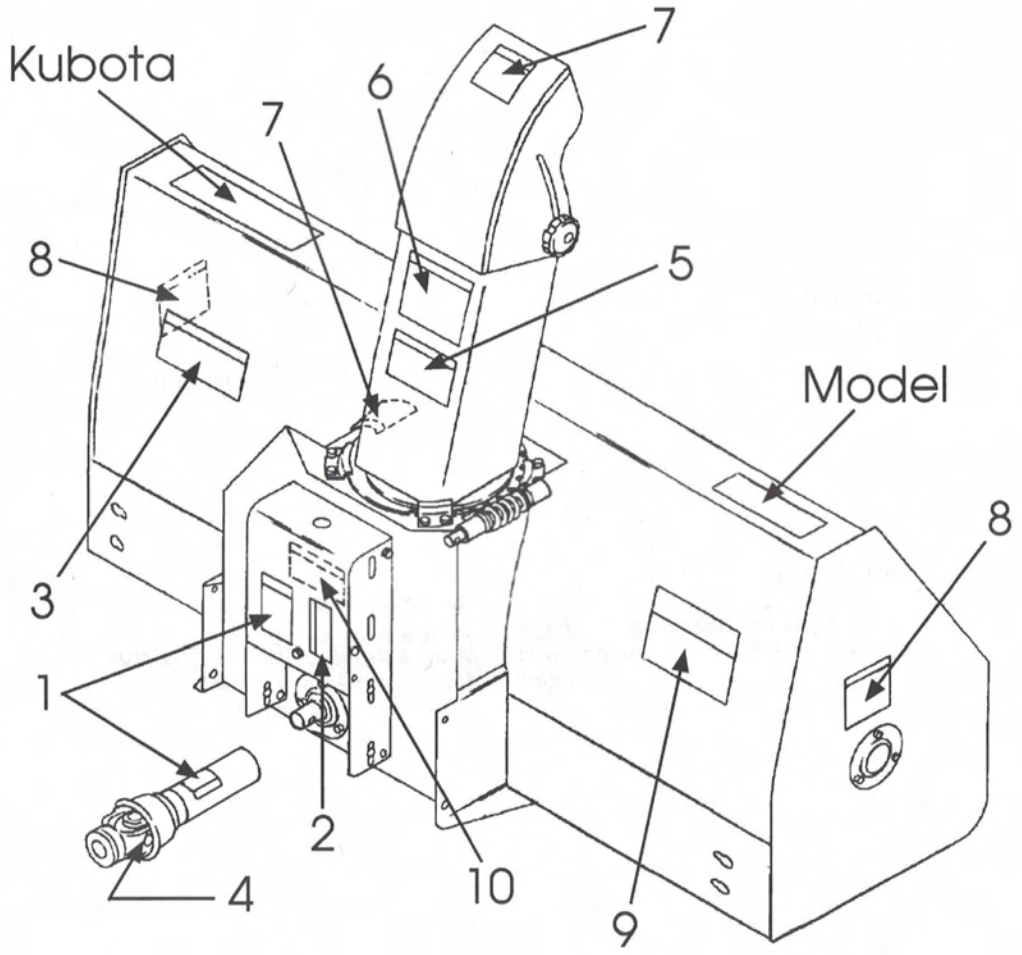

CARE OF SAFETY SIGNS

1. Keep safety signs clean and free of obstructing debris.
2. Clean safety signs with soap and water and dry with a soft cloth.
3. Replace damaged or missing safety signs with new ones obtained from your KUBOTA Dealer.
4. If a component(s) with a safety sign(s) affixed is (are) replaced with a new part(s), make sure new safety sign(s) is (are) attached in the same location(s) on the new component(s).
5. Mount new safety signs by applying on a clean dry surface and working air bubbles from the center, outward to the edges.

SAFETY SIGNS - Continued

SAFETY SIGN ILLUSTRATIONS & PART NUMBERS

1. 70050-02148

2. 70080-01438

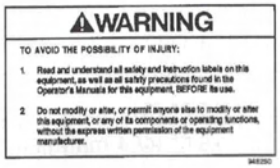

3. 70050-93958

4. 70050-94057
On shaft under plastic guard

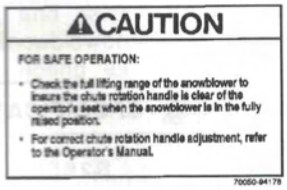

5. 70050-94178

6. 70050-94179

7. 70050-94180

8. 70050-94181

9. 70050-94259

10. 70050-93896

KUBOTA = 70050-01589

B2650 = 70050-94257
B2660 = 70050-94258

SPECIFICATIONS

B2650 & B2660 Snowblowers

AUTHORIZED TRACTOR APPLICATIONS		
B1700 - All Models	B2100 - All Models	B2400 - All Models

SNOWBLOWER SPECIFICATIONS		
	B2650	**B2660**
OVERALL LENGTH	132.2" (3558 mm)	132.2" (3558 mm)
OVERALL WIDTH	50.0" (1270 mm)	61.5" (1562 mm)
OVERALL HEIGHT	43.5" (1105.0 mm)	47.0" (1184 mm)
CUTTING WIDTH	50.0" (1270 mm)	60.0" (1524 mm)
CUTTING HEIGHT	23.25" (591 mm)	23.25" (591 mm)
REACH - ℄ Front Axle to Cutting Edge	37.8" (960 mm)	37.8" (960 mm)
REACH - ℄ Front Axle to Auger Shaft	39.5" (1003 mm)	39.5" (1003 mm)
BLOWER DIAMETER	15.5" (394 mm)	15.5" (394 mm)
BLOWER WIDTH	6.5" (165 mm)	6.5" (165 mm)
IMPELLER WIDTH	5.0" (130 mm)	5.0" (130 mm)
IMPELLER TYPE	Three Blade	Three Blade
IMPELLER SPEED @ Rated PTO/RPM	903 RPM	903 RPM
AUGER DIAMETER	14.0" (345 mm)	14.0" (345 mm)
AUGER HEIGHT	15.75" (404 mm)	16.0" (404 mm)
AUGER CLEARANCE - from ground	2.25" (51 mm)	2.25" (51 mm)
FLIGHTING PITCH	14.0" (356 mm)	14.0" (356 mm)
AUGER SPEED @ Rated PTO/RPM	181 RPM	181 RPM
CHUTE ROTATION	200 degrees	200 degrees
DISCHARGE CHUTE DIAMETER	5.6" (146 mm)	5.6" (146 mm)
LIFT HEIGHT, above Ground Line	5.6" (146 mm)	5.6" (146 mm)
CUTTING DEPTH, below Ground Line	3.0" (76 mm)	3.0" (76 mm)
SHIPPING WEIGHT, approximate	200 lbs (106.8 kg)	240 lbs (106.8 kg)
SHIPPING DIMENSIONS - Length	60.0" (11524 mm)	70.0" (1778 mm)
Width	28.0" (711 mm)	28.0" (711 mm)
Height	27.0" (685 mm)	27.0" (685 mm)

NOTE: Specifications and dimensions will vary slightly depending on tractor application.

INTRODUCTION

USING THIS MANUAL

This Operator's Manual has been printed to provide you with safe operating techniques, correct assembly, maintenance procedures, and parts information on your new KUBOTA Snowblower. Please read this manual carefully, noting all SAFETY PRECAUTIONS.

References to right and left, forward or rearward, used in this manual refer to that direction when sitting on the operator's seat facing forward.

If a parts or service concern is encountered contact your KUBOTA Dealer. His personnel have been trained to assist you with your equipment. They will need the model and serial numbers to give you up-to-date parts and proper service on a timely basis.

Should any assistance be required in understanding any section of this manual, contact your KUBOTA Dealer. Also contact your dealer for authorized service parts. Substitute repair parts will void the product warranty, and will not meet the standards required for safe operation.

This manual incorporates the latest B2652 mount kit information for correct tractor application.

APPLICATION

Kubota B2650 and B2660 Snowblowers have been designed for use on Tractors as shown in the Snowblower Specifications on page 6.

CAUTION: *MAKE SURE THE TRACTOR IS COUNTERWEIGHTED FOR SNOW-BLOWER USE AS RECOMMENDED BY YOUR KUBOTA DEALER. WEIGHTS PROVIDE THE NECESSARY BALANCE TO PREVENT LOSS OF CONTROL AND POSSIBLE TIP-OVER.*

NOTE: Special steering stops are included with this Snowblower. They are required ONLY on four wheel drive B2400 Tractors equipped with 7-12 R1 Ag tires.

SERIAL NUMBER INFORMATION

Locate the model/serial plate for the Tractor and Snowblower. Record this information, along with the name of the selling dealer and date of purchase below for future customer reference.

	TRACTOR	SNOWBLOWER
MODEL NUMBER		B2650
SERIAL NUMBER		B2650 Front ~~7[illegible]~~ 70300996 B2652 Frame 69501168
DEALER NAME		
PURCHASE DATE		

CAUTION: *REPLACE ANY SAFETY SIGNS THAT ARE DAMAGED, LOST, OR OTHERWISE HAVE BECOME ILLEGIBLE. REPLACE ALL SIGNS AFTER REPAINTING. IF A PART TO BE REPLACED HAS A SAFETY SIGN ON IT, OBTAIN A NEW SIGN FROM YOUR KUBOTA DEALER AND INSTALL IT IN THE SAME LOCATION ON THE NEW PART.*

TRACTOR PREPARATION

NOTE: Prior to mounting snowblower on the applicable tractor, all front and mid-mounted implements on the tractor will have to be removed. If the unit is equipped with a front loader, only the quich attach items, lift arms and bucket, are to be removed. Units with a mid-mount mower must have the mower and its front brackets removed from the tractor.

1. If the tractor is NOT equipped with a loader, and remote hydraulics are desired to raise the snowblower head, an optional Hydraulic Valve Kit, Wholegoods Number B2056, is required.

2. If the tractor is not equipped with a loader, and optional hydraulics are not desired, the tractor 3-point hydraulic lift system will be used to raise the snowblower.

3. Information for all three hydraulic lift applications are included in these instructions.

IMPORTANT: *The tractor STEERING STOPS included with this kit MUST be installed as follows, ONLY on* ***B2400 Four Wheel Drive Tractors equipped with 7-12 R1 Ag tires.***

STEERING STOP PLATE INSTALLATION

1. Remove the upper forward bolt and washer from the left axle and drive hub housing. Discard the bolt and washer.

2. Install a new M12-1.25 x 45 bolt and lock-washer as shown. Special torque on this bolt is 91-108 ft. lbs. (123.5-147.0 N•m).

3. Install the left steering stop to the protruding thread of the bolt and retain with a lockwasher and M12-1.25 nut. Torque on the nut is 62-75 ft. lbs. (84.0-101.8 N•m).

4. Repeat instructions 1 thru 3 on the right side of the four wheel drive axle.

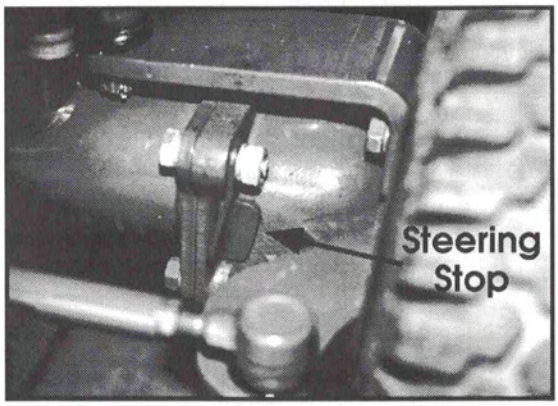

TRACTOR PREPARATION - Continued

NOTE: Continued tractor preparation is necessary if the mounting kit and snowblower will use the tractor 3-point hydraulics to raise the snowblower. If the optional hydraulic kit will be installed, or if the tractor loader hydraulics will be used, disregard these instructions and proceed to page 10.

3-POINT HYDRAULIC CONTROL VALVE RETURN SPRING INSTRUCTIONS

1. Flip the tractor seat forward, against the steering wheel.
2. Looking at the right side of the fender stay from the rear of the tractor, cut the wire tie that retains the wire harness to the fender stay. This will allow the harness to drop.
3. Lower the 3-point arms to gain clearance for drilling, from the rear of the tractor.
4. Center punch a mark, 5/16 inches above the lower ledge of the stay, in line with the wire tie hole. Drill a 5/16 inch hole (8 mm) thru the vertical edge of the fender stay as illustrated.

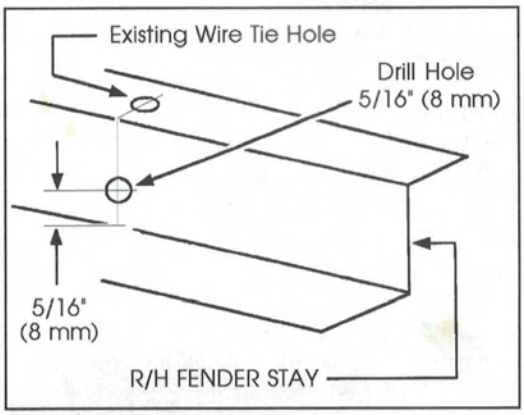

5. Remove the control valve stop from the rear of the control board and move it to the front, in front of the control lever.
6. Install the compression spring on its collar using a M8-1.25 x 65 bolt (see page 44 for assembly sequence). Mount the return spring assembly to the fender stay from the front, thru the newly drilled 5/16" hole. Fasten with a lockwasher and nut.

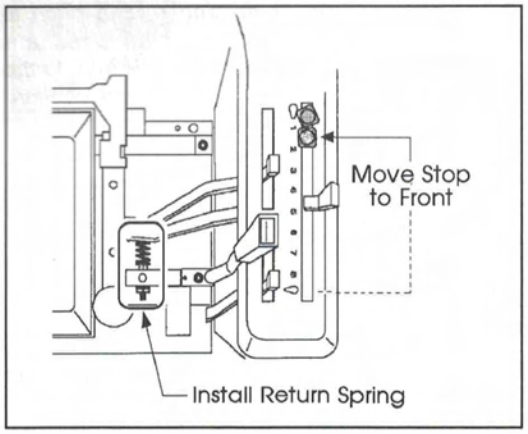

IMPORTANT: *Following complete snowblower set up, it may be necessary to adjust the return spring. See page 16 for adjustment procedure.*

SUB-FRAME INSTALLATION

IMPORTANT: *Sub-frame fasteners should not be torqued until instructions to do so are given. See the Torque Tightening Chart on page 22 for standard and special torque values.*

INSTALLING THE SUB-FRAME

Units using tractor 3-point hydraulics or the optional B2056 Valve Kit

NOTE: If the tractor is equipped with the B2056 valve stand, remove it and its spacers and lay it aside. The valve and hoses can remain in place on the stand.

1. Hold the mounting plates against each side of the tractor frame approximately as shown. Any mower brackets or fasteners that are in place behind these plates must be removed and stored for use when the mower is reinstalled.

2. Install the mounting plates, with the stiffener bar between them, as shown. It may be necessary to loosen and rotate the hose clamps on the driveshaft tube, on four wheel drive tractors, to allow stiffener bar clearance.

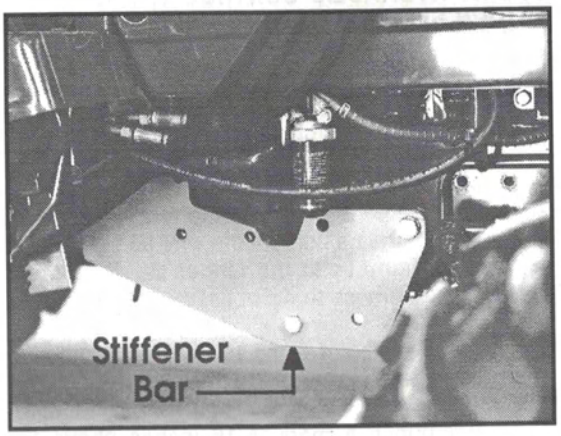

IMPORTANT: *Bolt length and thread pitch is critical as different SAE and metric sizes are required to install the mounting plates. Refer to the illustration on page 38 for correct size and location.*

3. Reinstall the valve stand to the right mount plate using the fasteners that were originally removed. The spacers that were removed are not used. The mount plate will take the place of these spacers.

4. All loose fasteners installed to this point can now be tightened according to the Torque Chart on page 22.

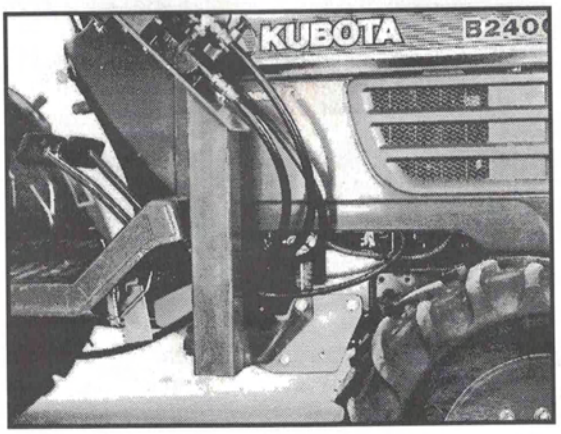

SUB-FRAME INSTALLATION - Continued

Units equipped with a Front Loader

1. Using the dimensions shown to the right, mark and drill 9/16" (15 mm) holes in both sides of the loader sub-frame.

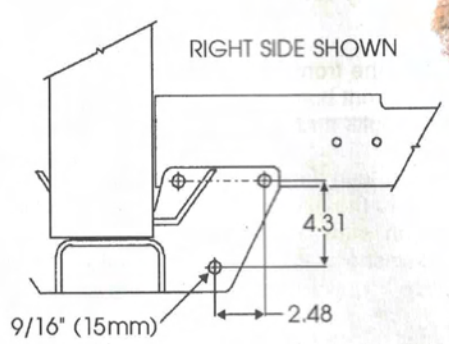

All Unit Combinations

NOTE: DO NOT tighten sub-frame fasteners until instructions are given following step #5.

1. Fasten the hanger bracket/extension shaft assembly to one of the tubes as shown. Retain with 3/8-16 x 2 bolts and 3/8 locknuts. This assembly will be the left side of the sub-frame.

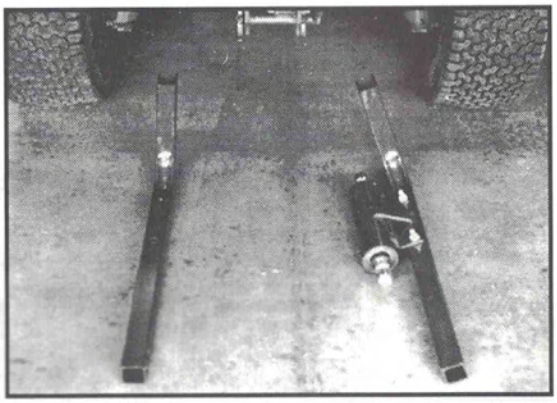

2. Install the rear of both tubes to the inside of the mounting plates or loader sub-frame. Loosely retain with 1/2-13 x 2-1/2 bolts and locknuts.

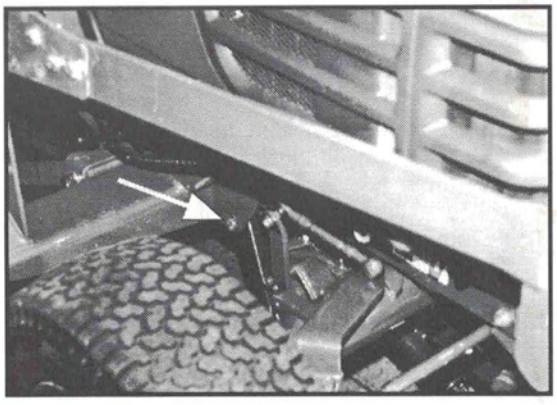

IMPORTANT: *Make sure the tube with the hanger bracket/extension shaft assembly is installed on the LEFT side.*

All Unit Combinations - Continued

3. Install the front mount weldment to the outside of the front bumper frame. Fasten with 1/2-13 x 1-1/2 bolts and locknuts.

4. Swing each tube upward at the front and fasten them to the inside of the front mount weldment. Retain with 1/2-13 x 2-1/2 bolts, flat and lockwashers, thru the front mount, by threading these bolts into the block spacers.

5. Install the lift frame weldment to the rear hole in the front mount weldment and retain with a 3/4 x 4.0 clevis pin on each side and lock in place with large hairpin clips.

NOTE: Sub-frame fasteners can now be torqued according to specifications found on page 22. Maximum torque on all 1/2 inch sub-frame bolts is 60 ft. lbs. (81.6 N•m).

6. Install the cylinder to the front mount and lift frame. Make sure the oil ports face forward. Fasten with a 1.0 x 2-1/4 clevis pin and 5/32 x 1-1/2 cotter pin at the bottom and a 1/2 x 2-5/8 clevis pin and 1/8 x 1.0 cotter pin at the top.

IMPORTANT: *The transport lock bar is used only on units using tractor 3-point hydraulics for lift. It should not be used with the other hydraulic applications.*

7. Install a 1/2-13 x 1-1/2 bolt thru one end of the transport lock bar and fully install one nut. Place the transport lock bar thru the left side of the frame rail as shown. Install another nut inside the frame rail until it is flush with the bottom of the bolt and tighten the outside nut. The transport lock bar must be free to pivot.

8. Install a 1/2 x 1.0 clevis pin and hairpin clip in the storage position.

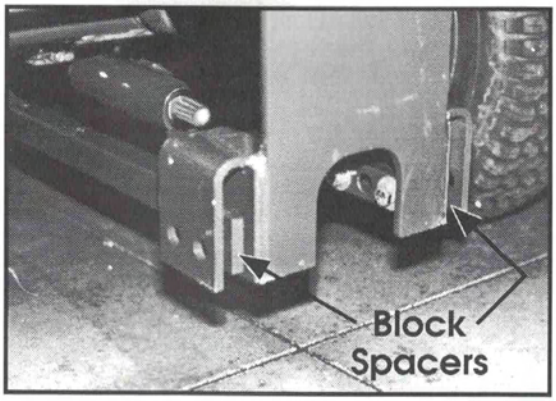

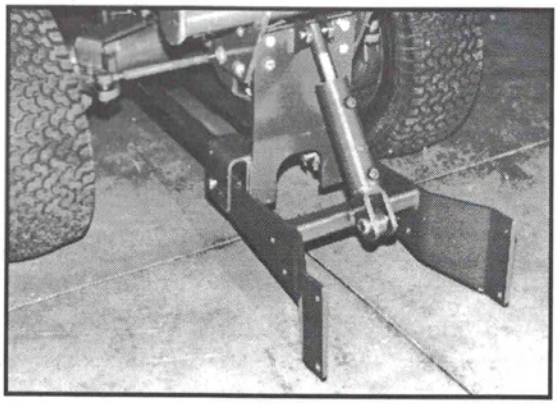

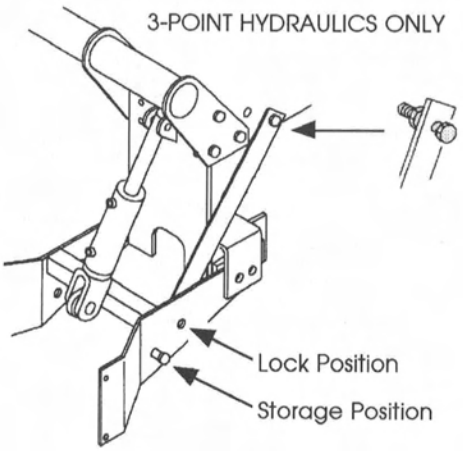

SUB-FRAME INSTALLATION - Continued

INSTALLING HANDLE SUPPORT

1. Install the handle support to the right engine side rail as shown.

NOTE: M10-1.25 x 35 bolts are provided so the handle support can be installed without the spacers, on gear drive tractors that will use 3-point hydraulics to raise the snowblower. HST and remote or loader hydraulic applications must use the spacers and bolts described in step 2.

2. Place 1/2 inch spacers from this kit between the side rail and handle support base and fasten with M10-1.25 X 45 bolts and lockwashers.

NOTE: On HST tractors, the "P" clamp must be removed and reversed on the tube. The "P" clamp is then installed between the handle support and spacer, behind the front bolt as illustrated.

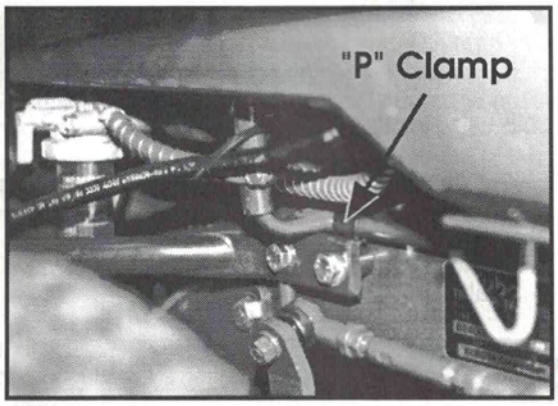

3. Install the anchor tube and grommet, over the handle support and loosely retain with a 3/8-16 x 3/8 set screw and 3/8-16 jam nut.

NOTE: The handle upright will require adjustment for ease of chute rotation after the snowblower, chute and crank handle have been installed.

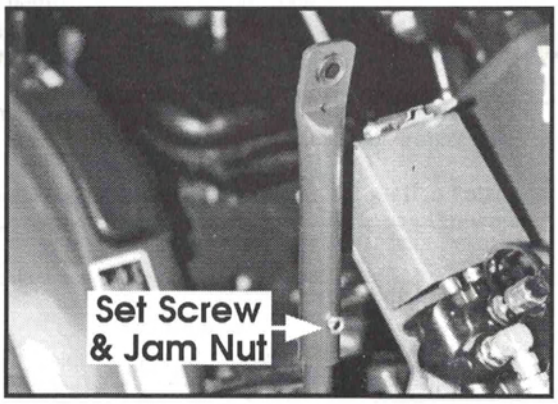

HYDRAULIC CONNECTIONS

NOTE: See page 40 & 41 in the Parts Illustrations for assistance in identifying items that are used in all hydraulic applications. Proceed to page 15 for instructions on units that will use optional remote, or loader hydraulics.

IMPORTANT: *On all hydraulic applications, disregard the fitting direction that is illustrated on page 40 and align fittings as follows.*

Units using tractor 3-point hydraulics

1. Pull the open/close control valve grip off and remove the under seat cover to expose the front of the 3-point top cover.
2. Remove the plug to the right of the control valve grip stem and install a 1/4 inch ISO adapter with teflon sealer.
3. Install one 1/4 x 66 hose with teflon sealer into this adapter. Make sure the plastic plug remains in the free end of this hose so dirt is not introduced during the routing of the hose.
4. Route the hose downward behind the right step platform, between the differential case and dipstick tube. If the tractor is an HST, the hose must be behind the cooling tube coming from the differential. Reinstall the under seat cover and control valve grip.
5. Route the free end of the hose forward, under the right step, ABOVE the brake pivot, so it comes out in front of the step between the frame and INSIDE the parking brake and throttle control rods.
6. Place a new "P" clamp on the hose and retain it to the bottom of the small hole in the right radiator mount plate. Fasten with a 5/16-18 x 3/4 bolt and locknut so the hose is forward. Install the quick disconnect nipple with teflon sealer to the free end of the hose.
7. Install a 1/4 x 1/8 adapter fitting with teflon sealer into the bottom port of the lift cylinder. Install the vent plug with teflon sealer into this adapter.
8. Install a 1/4 x 90° swivel fitting with teflon sealer into the top port of the cylinder. Tighten so it points upward.
9. Install a 1/4 x 28 hose into the fitting in the cylinder and install the quick disconnect coupler to the free end of the hose.
10. Connect the quick coupler halves to complete 3-point hydraulic installation.

NOTE: Remaining hydraulic items from this mounting kit that were not used can be discarded.

IMPORTANT: *Following assembly of the complete snowblower, this hydraulic circuit should be pressure checked to insure that all fittings and hoses are tight, and that the hose under the tractor is not interfering with tractor brake or throttle functions.*

SUB-FRAME INSTALLATION - Continued

HYDRAULIC CONNECTIONS - Continued

Units using the optional B2056 Valve Kit, or units using Loader Hydraulics

1. Install two 1/4 x 90° swivel fittings with teflon sealer into the cylinder ports. Tighten so they point to the right and slightly upward.

2. Install and tighten a 1/4 x 60 hose in the upper cylinder fitting and a 1/4 x 66 hose in the lower fitting. Install 45° fittings and quick disconnect couplers to the free ends of these hoses. Route the hoses along the right side of the tractor.

3. Connect the 60 inch hose coupler to the nipple in the "B" port of the control valve. Connect the 66 inch hose coupler to the nipple in the "A" port of the control valve.

4. Loosely install the hose bracket to the right side of the engine side rail with an M14-1.5 x 45 bolt, lockwasher and nut. Place a 5/16-18 nut all the way onto the hose hook. Install the hook thru the small hole in the right radiator mount plate and retain with another nut.

5. Hold the hoses together and retain with plastic ties, in front of the bracket and behind the hook. To allow for easy snowblower removal, DO NOT tie the hoses to the bracket or hook, or any other part of the tractor. Place the hoses in the hook and bracket, allowing the hose bundle angle to position the bracket. Tighten the bracket fastener.

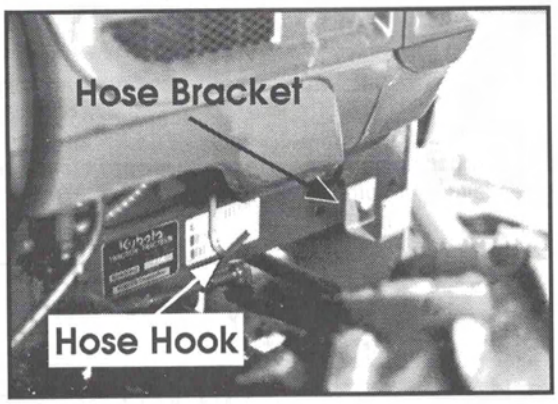

NOTE: Remaining hydraulic items that were not used can be discarded.

IMPORTANT: *Following assembly of the complete snowblower, the hydraulic circuit should be pressure checked to insure that all fittings and hoses are tight.*

SEASONAL SERVICE (Only for units using tractor 3-point hydraulics)

IMPORTANT: *To protect the hydraulic lift cylinder from moisture and possible corrosion, remove the vent from the lower port of the lift cylinder and squirt a small amount of new clean oil into the cylinder. This procedure should be accomplished at the start and end of each snow removal season, and more often if the winter season is long, or the unit is used excessively.*

HYDRAULIC ADJUSTMENTS N/A

NOTE: If the snowblower has been set up with the optional hydraulic lift kit, or is using front loader hydraulics, the following adjustment procedure is not necessary. If hydraulic pressure adjustments are necessary in these circuits, refer to hydraulic adjustment information in the applicable KUBOTA Workshop Manuals.

ADJUSTING 3-POINT HYDRAULIC CONTROL VALVE RETURN SPRING

1. Move the hyrdaulic control valve lever rearward to the constant pumping position. In this position the base of the lever should contact the return spring. It will be necessary to hold the lever against the spring to activate the snowblower lift cylinder.

2. Once the lift cylinder has traveled its full stroke, the control valve relief circuit should activate. Slowly release the lever. The return spring will move the lever into its neutral position, canceling the relief circuit and holding the snowblower in the raised position.

NOTE: If the return spring moves the lever too far forward, allowing the snowblower to lower, or does not fully deactivate the relief circuit, it will be necessary to fine tune the return spring adjustment as follows.

A. LEVER IS MOVED TOO FAR FORWARD

Remove the return spring assembly and lightly file one end of the collar, shown below as (A), removing material so the spring will be positioned further rearward, away from the control lever. Reinstall and check adjustment. When the lever is in neutral, the snowblower should remain in the transport position with no downward drift. Remove just enough material so the spring will return the lever to neutral.

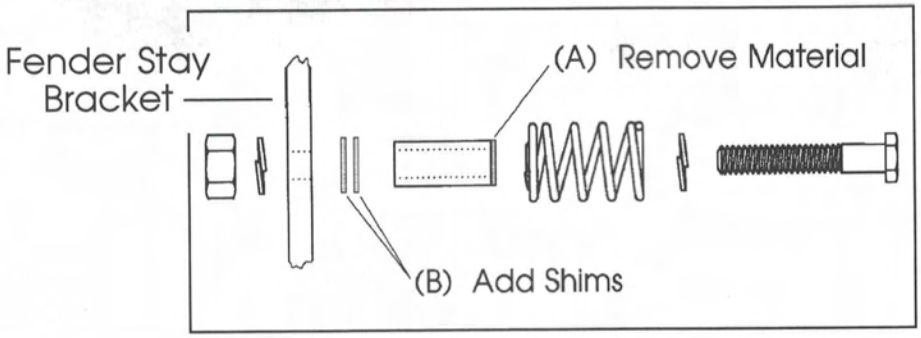

B. HYDRAULIC RELIEF REMAINS PARTIALLY ACTIVATED

Remove the return spring assembly and add shims (not provided), shown above as (B), between the collar and fender stay bracket. This will move the spring forward, moving the lever into neutral. Be careful as too much shim will allow the snowblower to drift downward, creating the problem above.

NOTE: Periodic adjustment of this spring may be necessary, as oil temperature and snowblower use may have an effect on neutral centering performance.

ADDITIONAL ASSEMBLY INFORMATION N/A

IMPORTANT NOTES:

Prior to installing the snowblower, conduct the pre-delivery inspection and insure that the required 3-point hitch ***"Free Travel"*** *and* ***"Relief Valve Setting Pressure"*** *specifications are correct.*

Refer to the Kubota B1700 - B2100 - B2400 Tractor Workshop Manual, under HYDRAULIC CYLINDER ASSEMBLY (Hydraulic Cylinder, Position Control Valve, Relief Valve, etc.) for these critical adjustments.

If this kit and the snowblower have been set up to operate from the tractor 3-point lift system, accomplish the hydraulic control valve return spring adjustments on page 16, prior to pre-delivery testing and customer delivery.

DRIVE SHIELD EXCHANGE

The B2650 & B2660 Snowblower may have two chain shields. Remove and discard the shield shown below. After the mounting kit and snowblower have been installed on the tractor, and after the driveline has been connected to the snowblower, install the new shield with the fasteners removed from the original shield.

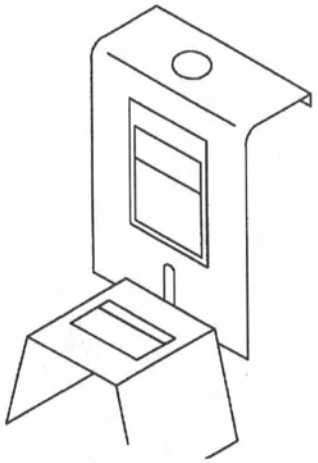

Discard this Shield

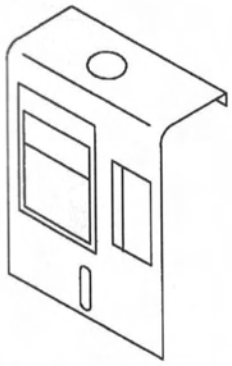

Replace with this Cover Plate

SNOWBLOWER INSTALLATION

FASTENING TO THE LIFT FRAME

IMPORTANT: *Make absolutely sure the tractor, lift frame and snowblower head are on level ground before proceeding.*

1. With the lift frame down, or in "float", align the snowblower in front of the lift frame. Remove the 1/4 locknut and flat washer thru the lower chain shield and remove and lay the chain shield aside.

2. Fasten the snowblower to the outside of the lift frame ears. Use 1/2-13 x 1 bolts, flat washers and locknuts in the bottom holes, and 3/8-16 x 1-1/4 bolts, flat washers and locknuts in the top holes.

   - Check to insure the snowblower head and mounting kit are level prior to torquing fastening hardware.

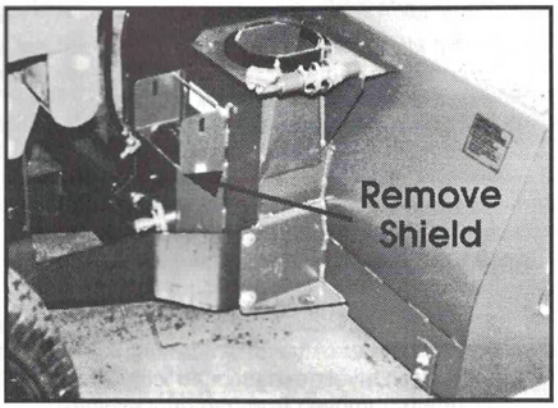

NOTE: All sub-frame and snowblower head fasteners installed to this point can now be tightened according to the specifications found on the Torque Tightening Chart on page 22.

INSTALLING THE CHUTE

1. Place the chute wear bushing over the outlet on the snowblower. This bushing is **directional** and must be rotated to fit.

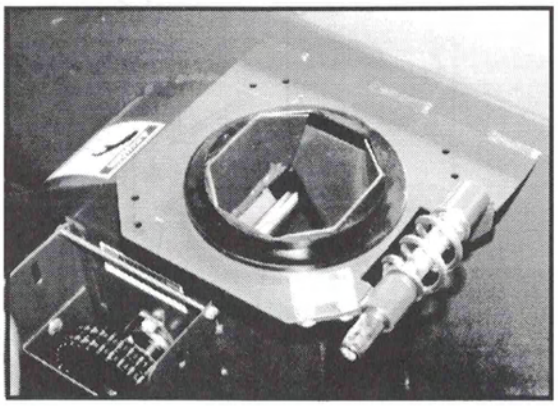

INSTALLING THE CHUTE - Continued

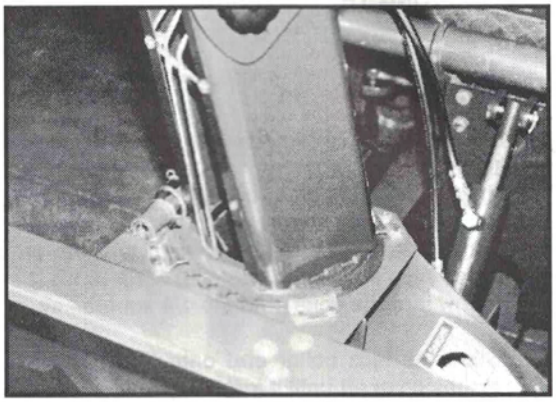

2. Slip the chute under the retainer plate on the outlet and bushing so it engages the worm drive and faces forward.

3. Install the three loose chute retainer plates and fasten with 1/4-20 x 1/2 bolts and locknuts. All chute retainer plate fasteners can now be tightened.

INSTALLING THE CHUTE HANDLE

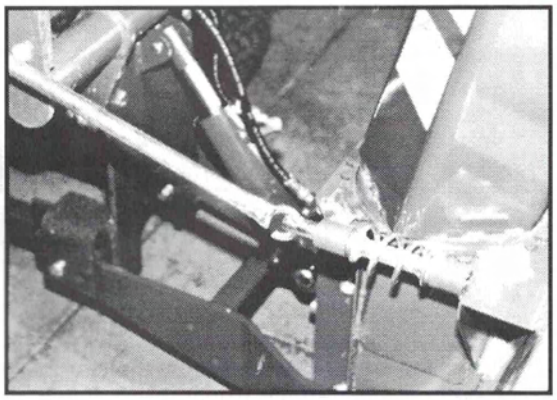

1. Install the tube half of the handle with the hook end into the hole in the end of the worm shaft.

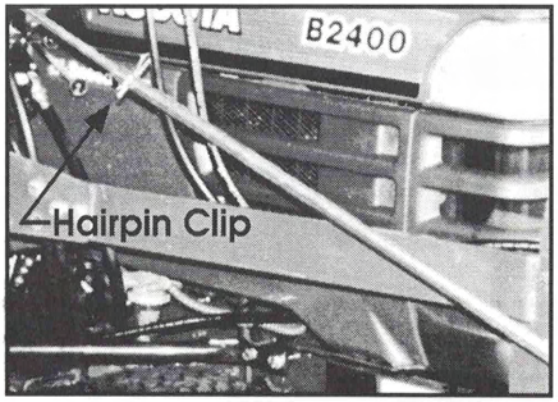

2. Slide the crank end of the handle, forward thru the grommet in the adjustable upright, into the tube end. The two piece handle is adjustable for full range movement when the snowblower is raised or lowered. Install the hairpin clip to hold the handle halves together.

CONNECTING THE DRIVESHAFTS

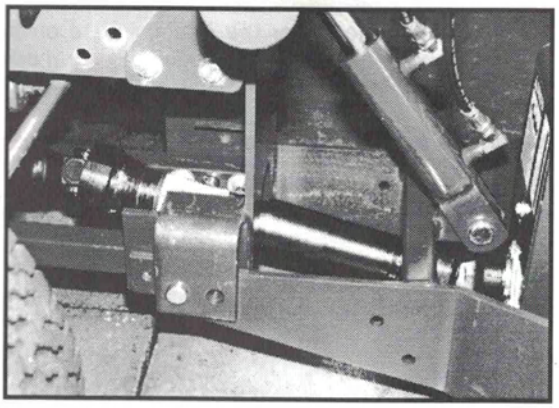

1. Place a 1/4 inch square key in the keyway on the snowblower shaft. Slide the shorter front driveshaft onto the snowblower shaft and align the holes in the shaft ends. Install and tighten a 5/16-18 x 2-1/2 bolt and locknut thru the cross hole. Also install and tighten a 5/16-18 x 1/2 set screw thru the yoke onto the 1/4 square key.
2. Slide the lock collar end onto the front of the extension shaft until it locks in place.
3. Reinstall the drive chain shield. See page 17.

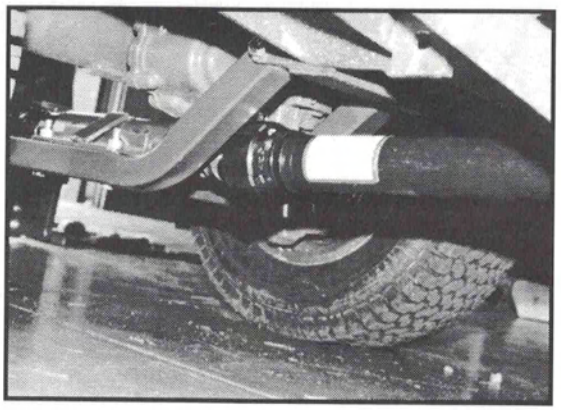

4. Install the longer driveshaft from the rear tractor PTO to the rear of the extension shaft until the safety collars lock in place.

IMPORTANT: *Make sure all driveshaft safety collars are securely locked to their spiined shafts.*

SKID SHOE ADJUSTMENT

1. Loosen the 5/16-18 nuts on each skid shoe and adjust the shoe to hold the snowblower cutting edge 1/8 to 1/4 of an inch above a level paved surface, or from 1/4 to 1/2 inch above an uneven or gravel surface.

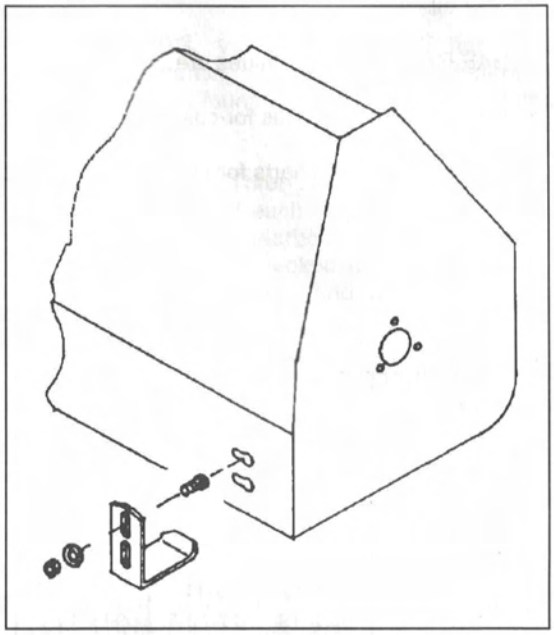

NOTE: Snowblower installation is now complete. Make sure all instructions in the Lubrication & Maintenance section are followed before operating the snowblower.

TORQUE TIGHTENING CHART

STANDARD TORQUE APPLICATION CHART

All torque values apply to new plated fasteners, or when fasteners have been cleaned and coated with new oil.

SAE Grade 5 torque values are shown for both coarse (UNC) and fine (UNF) threads.

Separate torque values for coarse or fine metric threads are shown on the split chart below.

Use the following charts for all fastener torque applications, except as noted below.

SAE GRADE 5

Bolt Size	ft. lbs.	N•m
1/4-20	9-11	12.2-14.9
5/16-18	17-20.5	23.1-27.8
3/8-16	35-42	47.5-57.0
7/16-14	54-84	73.2-86.8
1/2-13	80-96	108.5-130.2
9/16-12	110-132	149.2-179.0
5/8-11	150-180	203.4-244.1
3/4-10	270-324	366.1-439.3

METRIC GRADE 8.8

Bolt Size	ft. lbs.	N•m
Coarse		
M8-1.25	20-26	27.1-35.2
M10-1.5	38-46	51.5-62.3
M12-1.75	57-66	77.2-98.4
Fine		
M8-1.0	22-31	29.8-42.0
M10-1.25	40-52	54.2-70.5
M12-1.25	62-75	84.0-101.6

SPECIAL TORQUE APPLICATIONS

B2400 TRACTOR FRONT AXLE HOUSING (Steering Stops)
M12-1.25 x 45 bolt ..... 91-108 ft. lbs. (123.5-147.0 N•m)

SUB-FRAME FASTENERS
All various length 1/2-13 Bolts ..... 60 ft. lbs. (81.6 N•m)

LUBRICATION & MAINTENANCE

LUBRICATION

1. GREASE. Using KUBOTA gun grease, Part Number 70000-10401 (Cartridge), or any high quality #2 multi-purpose grease, lubricate each auger shaft tube and both driveshaft universal joints (4) every 8 hours of operation. Pull the driveshafts apart and grease the tube and shaft every 16 hours of operation.

2. HYDRAULIC OIL. Before daily operation, check the hydraulic oil. If the level is low, add oil as described in the applicable tractor operator's manual. Use only KUBOTA recommended hydraulic oil.

3. DRIVE CHAIN. Remove the chain shield and lubricate with chain oil every 8 hours of operation, and after EVERY use.

4. CHUTE ROTATOR. Lubricate the worm drive and chute gear with chain oil every 8 hours of operation, and after EVERY use to make sure it does not freeze during or after snow removal operation.

WARNING: *MAKE SURE ALL SHIELDS AND GUARDS ARE SECURELY IN PLACE, ESPECIALLY THOSE ON AND AROUND THE SNOWBLOWER DRIVESHAFT AND DRIVE CHAINS, FOLLOWING ALL CLEANING, SERVICE, OR REPAIR WORK.*

5. GEARBOX OIL. The snowblower gearbox oil level should be checked on a weekly basis. Use KUBOTA oil, Part Number 70000-10500 (1 quart bottle), any "pour" consistancy EP Grease, or any high quality SAE 80-90W Gear Oil. Remove the large vent plug on the top of the gearbox and fill until oil comes out of the check plug hole on the front of the gearbox.

DAILY MAINTENANCE

1. FASTENERS. Visually check all hardware before operation. Tighten loose fasteners to torque values found on the Torque Tightening Chart.

2. SHEAR BOLTS. Three shear bolts; two 5/16" at the outside end of each auger; one 1/4" in the joint between the gearbox and chain sprocket shafts, should be checked to make sure they are securely in place and in safe working condition.

3. AT SHUT DOWN. Run the snowblower for a minute or two after blowing snow to prevent ice formation and possible freeze up of the auger and blower fan.

SNOWBLOWER ADJUSTMENTS

WARNING: ***ALL*** *SNOWBLOWER REPAIRS, SERVICE, OR ADJUSTMENT,* ***MUST*** *BE PERFORMED WITH THE PTO DISENGAGED, AND THE ENGINE SHUT OFF.*

1. SKID SHOES. Adjust the both skid shoes equally up or down and to clear obstacles that may be encountered during operation.

WARNING: *READJUST THE SNOWBLOWER HOUSING SKID SHOES TO CLEAR GRAVEL, CRUSHED ROCK, SIDEWALK SEAMS, ETC.,* ***BEFORE EACH*** *OPERATION. EXERCISE EXTREME CAUTION WHEN OPERATING IN THESE CONDITIONS AS GRAVEL AND ROCK CAN BE THROWN, CAUSING BYSTANDER INJURY OR PROPERTY DAMAGE.*

2. DRIVE CHAIN. To adjust chain tension, remove the chain shield from over the chain reduction housing and driveshaft. Slightly loosen the 5/16 inch nuts on all four carriage bolts thru the reduction housing. The chain is adjusted by pushing down on the reduction housing until the the chain has 1/8 to 3/16 of an inch deflection. Hold the housing in place and retighten the carriage bolt nuts. Reinstall the chain shield.

3. CHUTE DEFLECTOR. Set the angle of the deflector according to the distance the snow must be thrown. The deflector should also be adjusted for low discharge when operating in confined areas.

   - To change the deflector angle, loosen the two deflector knobs, adjust the deflector to the appropriate angle and retighten the knobs securely.

CAUTION: *DO NOT MODIFY OR ALTER THE SNOWBLOWER, OR PERMIT ANYONE ELSE TO MODIFY OR ALTER THE SNOWBLOWER OR ANY OF ITS COMPONENTS OR OPERATING FUNCTIONS. IF YOU HAVE ANY QUESTIONS ABOUT MODIFICATIONS, CONTACT YOUR KUBOTA DEALER.*

WARNING: *BE EXTREMELY ALERT WHEN OPERATING THE SNOWBLOWER IN CONFINED AREAS. DIRECT THE DISCHARGE CHUTE ANGLE AND DIRECTION AWAY FROM GLASS WINDOWS, PARKED AUTOMOBILES, TRAFFIC WAYS, AND AWAY FROM BYSTANDERS AND PETS.*

CAUTION: *CHECK SHEAR BOLTS AND OTHER CRITICAL FASTENERS AT FREQUENT INTERVALS TO INSURE THE SNOWBLOWER IS IN SAFE OPERATING CONDITION.*

OPERATING INSTRUCTIONS

OPERATING CONTROLS

DANGER: *NEVER WEAR LOOSE OR EXTREMELY BULKY CLOTHING AROUND THE SNOWBLOWER. THIS TYPE OF CLOTHING MAY CATCH ON MOVING PARTS CAUSING SERIOUS PERSONAL INJURY OR DEATH. ALWAYS WEAR BOOTS THAT WILL IMPROVE FOOTING ON ICY SURFACES.*

Observe and follow all SAFETY instructions to prevent personal injury or damage to the snowblower, before operation is attempted.

1. CHUTE ROTATION

   MANUAL CHUTE CONTROL. Turning the handle in a clockwise direction will rotate the chute to the left, and turning in a counter clockwise direction will rotate the chute to the right.

2. LIFTING & LOWERING

   The snowblower is raised by moving the tractor 3-point control lever, or the remote hydraulic control lever rearward.

   Lower the snowblower by pushing the control lever forward into the float position. In the float position, the snowblower is free to move up and down as it follows the contour of the ground.

IMPORTANT: *On units equipped with remote or loader hydraulics, DO NOT use down pressure when lowering the snowblower. Always push the lever into the float position allowing gravity to lower the snowblower. Float will allow full steering control while permitting the snowblower to follow uneven ground contours, thereby eliminating unnecessary wear on the augers, cutting edge and skid shoes.*

3. SNOWBLOWER DRIVE

CAUTION: *MAKE SURE THE PTO IS IN THE* ***NEUTRAL*** *POSITION* ***BEFORE*** *STARTING THE ENGINE.*

The snowblower is driven by means of a driveshaft from the tractors mid-PTO, to the snowblower gearbox.

DANGER: *INSURE THAT ALL BY-STANDERS, ESPECIALLY* ***SMALL CHILDREN AND PETS,*** *ARE* ***WELL CLEAR*** *OF THE SNOWBLOWER BEFORE ENGAGING THE PTO AND LOWERING THE UNIT.* ***NEVER*** *ALLOW ANYONE TO BE IN FRONT OF THE SNOWBLOWER DURING OPERATION. CONTACT WITH MOVING PARTS MAY CAUSE SERIOUS INJURY OR DEATH.*

PREPARING FOR SNOW REMOVAL

WARNING: ***NEVER ALLOW ANY CHILDREN*** *TO OPERATE THE SNOW-BLOWER. ONLY TRAINED ADULTS SHOULD OPERATE OR SERVICE THIS EQUIPMENT. KNOW HOW TO STOP THE UNIT AND DISENGAGE CONTROLS QUICKLY. KNOW AND UNDERSTAND ALL SNOWBLOWER SAFETY PRECAUTIONS, INCLUDING THOSE IN THE TRACTOR MANUAL BEFORE SET-UP, SERVICE OR OPERATION.*

***CAUTION: BEFORE** BEGINNING **EACH** OPERATION, MAKE SURE THE AUGER AND FAN ARE CLEARED OF ANY ICE THAT MAY HAVE FORMED WHILE THE SNOWBLOWER WAS NOT IN USE.*

WARNING:** DO NOT PERMIT ANYONE TO RIDE ON THE SNOWBLOWER UNIT WHILE IN OPERATION OR TRANSPORT. **THERE IS NO SAFE PLACE FOR PASSENGERS ON THIS EQUIPMENT.** OPERATE THE SNOWBLOWER FROM THE OPERATOR'S SEAT **ONLY.

***CAUTION:** THOROUGHLY INSPECT THE AREA WHERE THE SNOWBLOWER IS TO BE USED AND REMOVE DOORMATS, SLEDS, BOARDS, AND OTHER FOREIGN OBJECTS. DURING OPERATION, PAY CAREFUL ATTENTION FOR OBJECTS THAT MAY ENTER THE BLOWER AND BE THROWN. INSPECT THE SNOWBLOWER AFTER STRIKING ANY OBJECT TO INSURE THAT ALL SNOWBLOWER PARTS ARE NOT DAMAGED.*

REMOVING SNOW

***CAUTION: ALWAYS** WEAR SUITABLE HEARING PROTECTION SUCH AS EARPLUGS OR EARMUFFS, **AND** ADEQUATE SAFETY GLASSES OR SAFETY GOGGLES WHEN OPERATING THE SNOWBLOWER.*

1. After the engine has been started and warmed up, set the throttle at low to medium idle before engaging the PTO.
2. Always use full engine speed when blowing snow. Low engine RPM will cause frequent discharge chute plugging. Adjust travel speed for encountered conditions rather than slowing the engine speed.
3. DO NOT use the snowblower as a dozer blade to push snow. Let the snowblower gradually work its way thru deep drifts. If ground speed is too fast in these conditions, the snowblower will become overloaded and the chute will plug.

***DANGER:** WITH THE ENGINE **SHUT OFF**, USE A WOODEN BROOM STICK OR SIMILIAR PIECE OF WOOD (APPROX. 36 INCHES IN LENGTH) TO CLEAR OR UNPLUG THE DISCHARGE OPENING. **NEVER** PLACE HANDS INTO THE DISCHARGE OPENING. VERY SERIOUS INJURY, INCLUDING AMPUTATION, MAY RESULT.*

4. For best results when removing deep snow, raise the snowblower slightly during the clearing operation. When the snow has been cut down in depth, lower the snowblower to the ground and rework the area.

***WARNING:** BE EXTREMELY CAREFUL WHEN WORKING ON SLIPPERY OR ICY SURFACES, AND ON UNEVEN OR SLOPING WALKS OR DRIVES. **DO NOT** CLEAR SNOW ON STEEP SLOPES. DO NOT CLEAR SNOW ACROSS THE FACE OF SLOPES. EXERCISE EXTREME CARE WHEN TURNING ON SLOPES.*

5. When operating along an open driveway or sidewalk, with plenty of room on both sides, start in the center and blow snow in both directions. Traveling back and forth in this manner, it is not necessary to readjust the discharge chute or deflector while removing snow.

WARNING: *DURING OPERATION,* ***DO NOT*** *PUT HANDS OR FEET NEAR THE AUGER OR BLOWER FAN.* ***KEEP CLEAR*** *OF THE DISCHARGE OPENING AT ALL TIMES.*

6. If snow can only be thrown to one side of the driveway or sidewalk, start on the opposite side from where the snow will be thrown. At the end of the first pass, and at each succeeding pass, change ground direction and rotate the discharge chute 180° to throw removed snow into the containment area.

WARNING: *TO AVOID INJURY,* ***DO NOT*** *ADJUST OR UNPLUG, OR SERVICE THE SNOWBLOWER, WITH THE PTO ENGAGED OR WITH THE ENGINE RUNNING.*

TRANSPORTING THE SNOWBLOWER (Tractors using 3-point Hydrauilcs)

1. With the tractor PTO disengaged, start the engine and raise the snowblower to the full up transport position. Connect the transport lock to the upper hole in the right side of the lift bracket. Pin in place with a 1/2 x 1 clevis pin and hairpin clip.

2. When the unit is to be operated, store the clevis pin and hairpin clip in the lower hole in the lift bracket so it is not lost.

CAUTION: *ALWAYS RUN THE SNOWBLOWER FOR A FEW MINUTES AFTER SNOW REMOVAL TO PREVENT FREEZE-UP OF THE AUGER AND BLOWER FAN.*

CAUTION: *NEVER DRIVE THE TRACTOR AT TRANSPORT SPEEDS WITHOUT FIRST DISENGAGING THE PTO AND RAISING THE SNOWBLOWER TO ITS FULL TRANSPORT HEIGHT.*

CAUTION: *MAKE SURE THE SNOWBLOWING UNIT IS EQUIPPED WITH A SLOW MOVING VEHICLE (SMV) SIGN, AND BE ALERT FOR OTHER TRAFFIC WHEN OPERATING NEAR, OR CROSSING PUBLIC ROADS AND HIGHWAYS. BE EXTRA ALERT WHEN BACKING THE SNOWBLOWER.*

WARNING: *OPERATE ONLY DURING DAYLIGHT HOURS, OR WHEN THE AREA IS WELL LIT WITH BRIGHT ARTIFICIAL LIGHT.*

CAUTION: *PARK THE UNIT ON LEVEL GROUND, DISENGAGE THE PTO, LOWER THE SNOWBLOWER TO FULL GROUND CONTACT, WAIT FOR ALL ROTATING COMPONENTS TO STOP, SET THE PARKING BRAKE, SHUT OFF THE ENGINE AND REMOVE THE KEY,* ***BEFORE*** *LEAVING THE OPERATOR'S SEAT, OR* ***BEFORE*** *LEAVING THE UNIT UNATTENDED.*

PARTS ILLUSTRATIONS

PLEASE USE THIS SECTION FOR THE FOLLOWING INFORMATION

When needing replacement parts, contact your KUBOTA Dealer. They will need the model and serial numbers of the Tractor and Snowblower to give you the most up-to-date parts for your equipment. Refer the dealer to the parts illustration title and the item number of the parts required.

Use only genuine KUBOTA service parts on KUBOTA equipment.

Refer to the parts illustrations to assist with assembly and disassembly of the Snowblower.

TABLE OF CONTENTS

Housing, Auger & Fan Components 30

Drive Components 32

Discharge Chute Components 34

Gearbox Components 36

Sub-Frame Components 38

Hydraulic Lift Components 40

Front Driveshaft Components 42

Mid-Driveshaft Components 42

Miscellaneous Components 44

KUBOTA Tractor reserves the right to change, modify, or eliminate from time to time, for technical or other reasons, certain or all data, specifications, or equipment of the product, or the products themselves, without any liability or obligation.

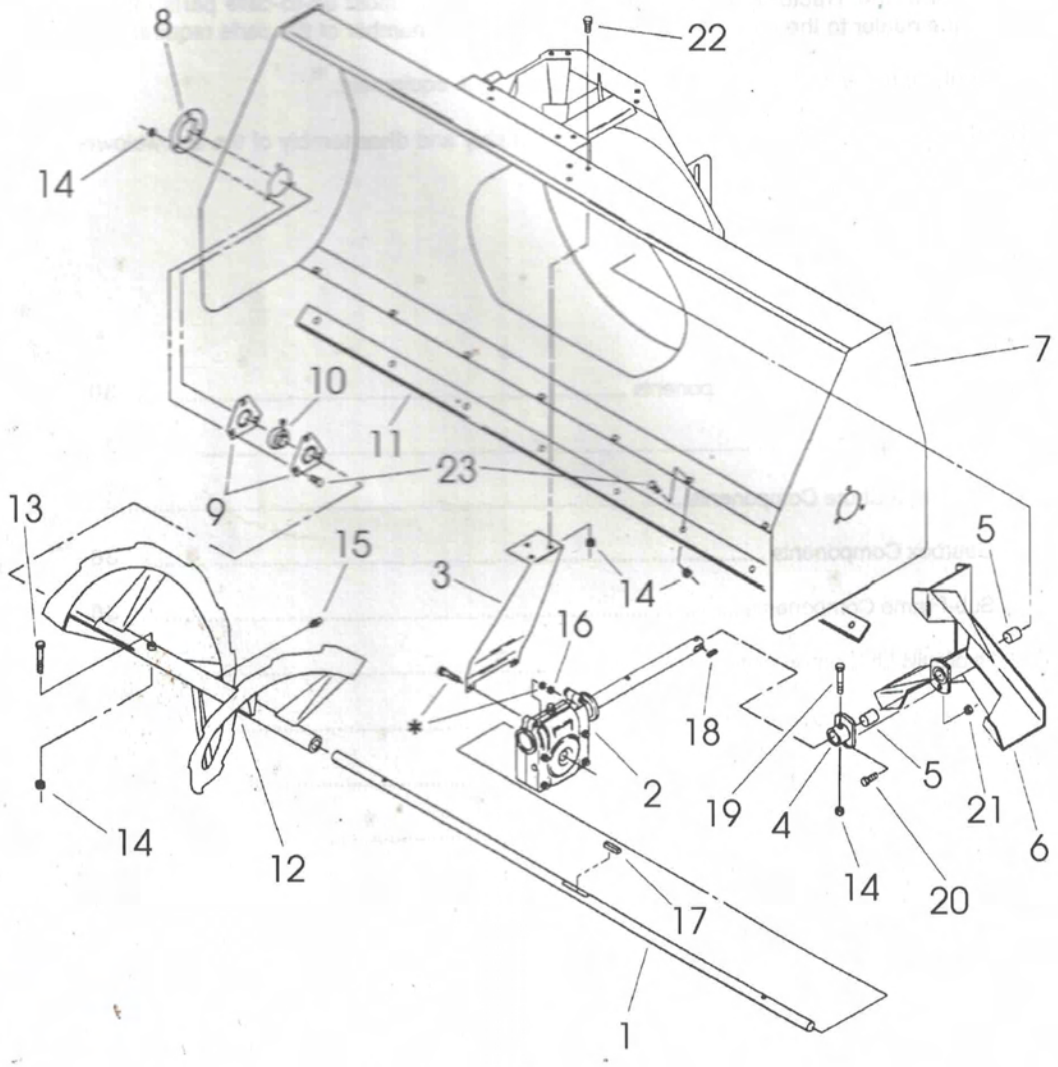
8
22
14
7
10
11
23
9
13
15
3
14
5
16
18
2
19
4
5
21
6
14
12
14
20
17
1

PARTS ILLUSTRATIONS - Housing, Auger & Fan Components

REF	PART NUMBER	DESCRIPTION	QTY
1	70050-94265	SHAFT, Auger - B2650	1
	70050-94264	SHAFT, Auger - B2660	1
2	70050-94670	GEARBOX ASSY.	1
3	70050-94269	BRACKET, Gearbox Mount	1
4	70050-94267	SHEAR HUB, Fan Adapter	1
5	70050-94141	BUSHING	2
6	70050-94266	FAN	1
7	70050-94280	HOUSING, B2650 - inc. Safety Signs √√	1
	70050-94279	HOUSING, B2660 - inc. Safety Signs √√	1
8	70050-94138	CAP, Shaft Bearing	2
9	70050-94160	RETAINER, Bearing	4
10	70050-94162	BEARING, Auger Shaft	2
11	70050-94675	CUTTING EDGE, B2650, Abrasion Resistant	1
	70050-94671	CUTTING EDGE, B2660, Abrasion Resistant	1
12	70050-94262	AUGER, RH -B2650	1
	70050-94260	AUGER, RH - B2660	1
	70050-94263	AUGER, LH - B2650	1
	70050-94261	AUGER, LH - B2660	1
13	70050-94176	SHEAR BOLT, Special	2
14	75599-31932	LOCKNUT, 5/16-18	18
15	70070-00181	NIPPLE, Grease - 1/4-28	2
16	02054-50080	NUT, M8-1.25	2
17	70050-94193	KEY, 1/4 Square x 1-3/4	1
18	70070-00186	KEY, 1/4 Square x 1-1/4	1
19	75599-03240	BOLT, 5/16-18 x 2 **"Grade 8"**	1
20	75599-01125	SHEAR BOLT, 1/4-20 x 1-1/4	1
21	75599-31931	LOCKNUT, 1/4-20	1
22	75599-01220	BOLT, 5/16-18 x 1	3
23	70050-94189	CARRIAGE BOLT, 5/16-18 x 3/4	15

√√ See page 4 for Safety Sign locations and page 5 for Part Numbers.

* Gearbox Fasteners

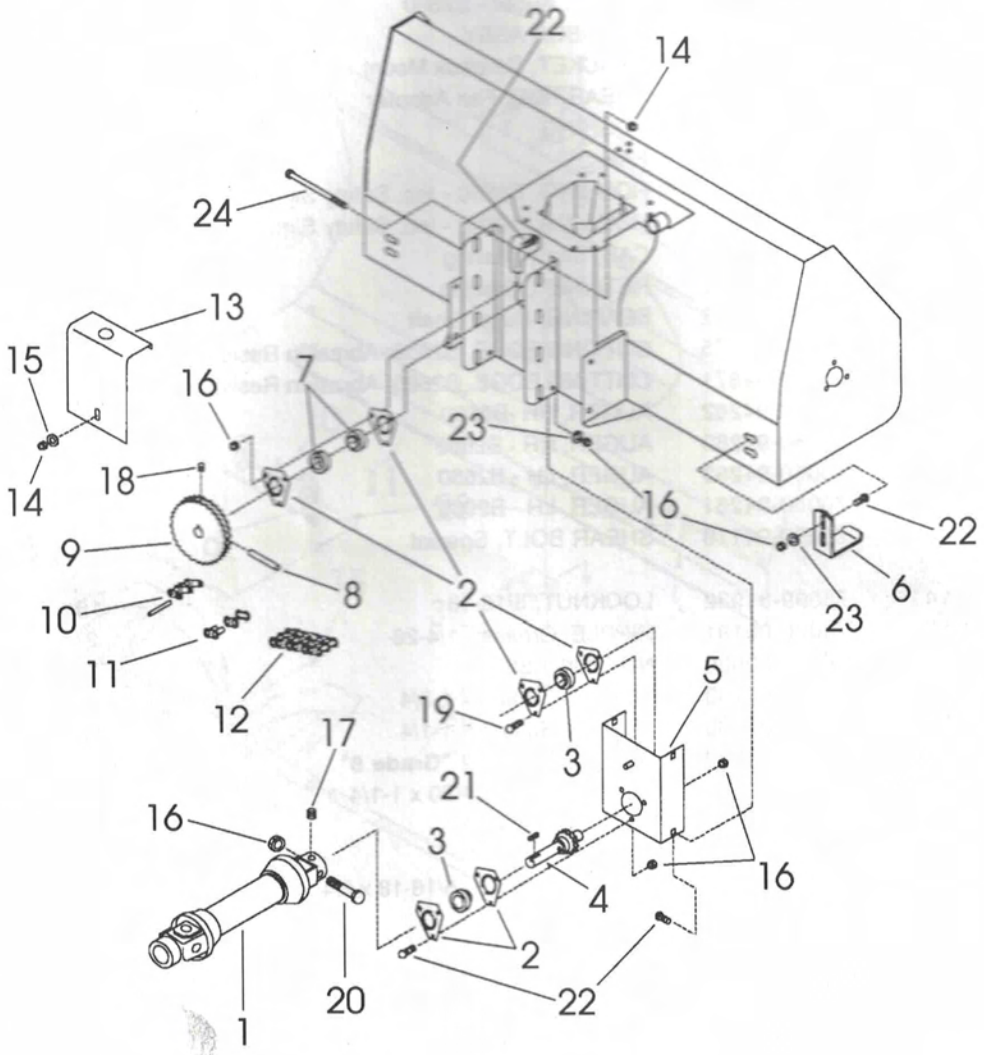
22
14
24
13
15
16
7
23
14
18
16
22
9
8
2
6
10
23
11
5
12
19
3
17
21
16
3
16
4
2
20
22
1

PARTS ILLUSTRATIONS - Drive Components

REF	PART NUMBER	DESCRIPTION	QTY
1	70050-94187	DRIVESHAFT, Front w/Signs √√	1
2	70050-94160	RETAINER, Bearing	6
3	70050-94162	BEARING, Chain Shaft	2
4	70050-94274	SHAFT, Chain Reduction	1
5	70050-94275	HOUSING, Reduction	1
6	70050-94674	SKID SHOE, Abrasion Resistant	2
7	70050-94161	BEARING, Gearbox Shaft	1
8	70050-94191	ROLL PIN, 1/4 x 2	1
9	70050-94277	DOUBLE SPROCKET, 35 tooth	1
10	70050-94556	HALF LINK	1
11	70050-94283	CONNECTING LINK	1
12	70050-94276	CHAIN, #40 Series - Special	1
13	70050-94272	SHIELD, Chain Reduction w/Signs √√	1
14	75599-31931	LOCKNUT, 1/4-20	2
15	75599-32111	FLAT WASHER, 1/4	1
16	75599-31932	LOCKNUT, 5/16-18	18
17	70050-94194	SET SCREW, 3/8-16 x 3/8	1
18	70070-00180	SET SCREW, 1/4-20 x 1/2 **	1
19	70050-94188	CARRIAGE BOLT, 5/16-18 x 5/8	3
20	75599-01250	BOLT, 5/16-18 x 2-1/2	1
21	70080-00284	KEY, 1/4 Square x 1	1
22	70050-94189	CARRIAGE BOLT, 5/16-18 x 3/4	14
23	75599-32112	FLAT WASHER, 5/16	8
24	70050-94177	BOLT, 1/4-20 x 7-1/2	1

√√ See page 4 for Safety Sign locations and page 5 for Part Numbers.

** Use Kubota P/N 70000-16549 High Strength Thread Lock when installing set screw #18.

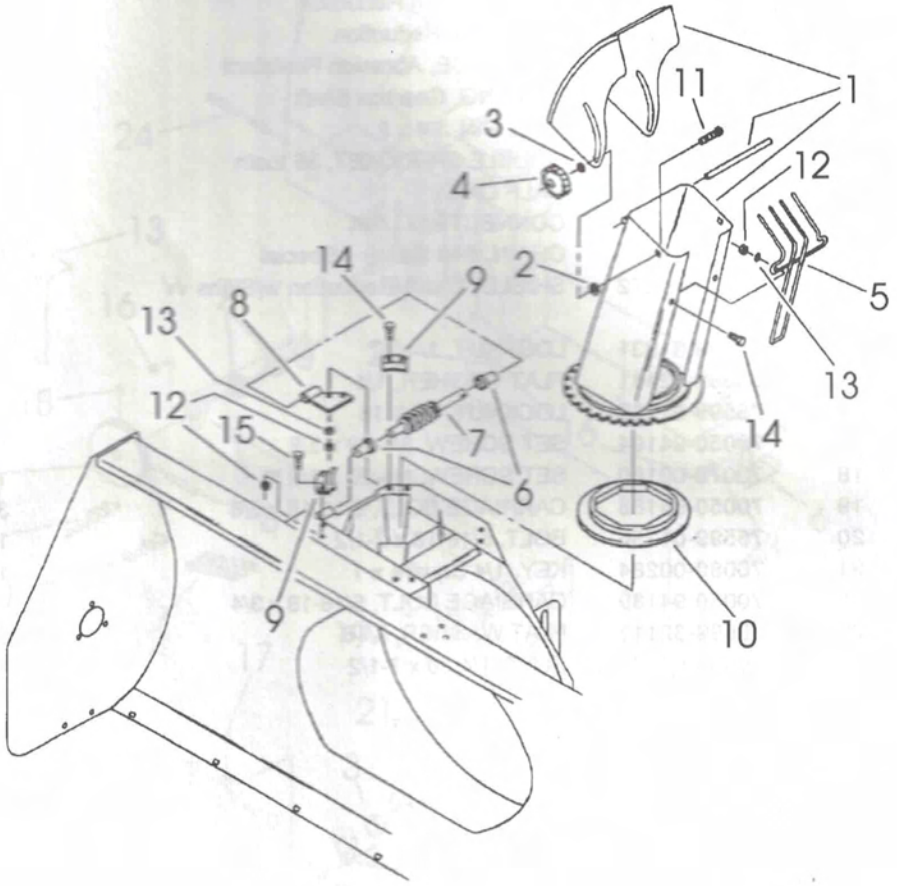
1
11
3
4
12
2
5
14
9
8
13
13
12
15
7
14
6
9
10

PARTS ILLUSTRATIONS - Discharge Chute Components

REF	PART NUMBER	DESCRIPTION	QTY	
1	70050-94281	DEFLECTOR, CHUTE & ROTATOR GEAR ASSEMBLY - inc. Safety Signs √√	1	
2	70050-94169	WASHER, Special - Large Dia. Nylon	2	
3	70050-94168	WASHER, Special - Small Dia. Nylon	2	
4	70050-94167	KNOB, Deflector Adjustment	2	
5	70050-94159	GRILL, Chute Opening	1	
6	70050-94175	BUSHING, Worm Shaft - Fiber	2	
7	70050-94153	SHAFT, Worm Drive	1	25.00
8	70050-94282	BRACKET, Shaft Bushing	1	28.00
9	70050-94152	PLATE, Chute Retainer	4	
10	70050-94164	BUSHING, Chute Base - Fiber	1	
11	70050-94190	CARRIAGE BOLT, 5/16-18 x 1	2	
12	75599-31931	LOCKNUT, 1/4-20	10	
13	75599-32111	FLAT WASHER, 1/4	3	
14	75599-01115	BOLT, 1/4-20 x 3/4	4	
15	75599-01110	BOLT, 1/4-20 x 1/2	6	

1-888-458-2682

MONROE TRACTOR

334-3867

√√ See page 4 for Safety Sign locations and page 5 for Part Numbers.

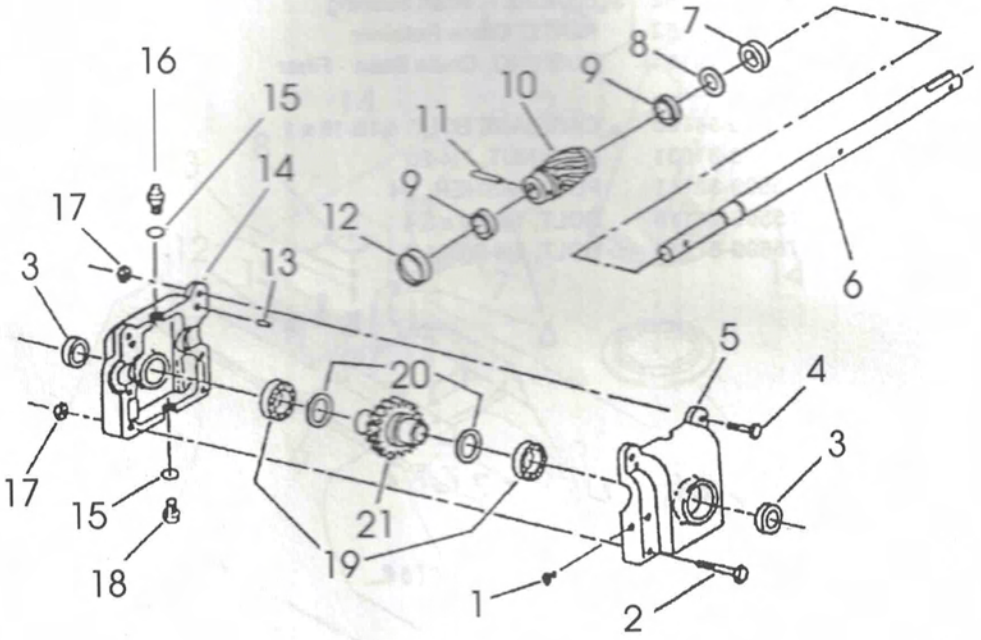
16
15
14
17
3
13
12
9
11
10
9
8
7
6
5
4
3
20
21
19
1
2
17
15
18

PARTS ILLUSTRATIONS - Gearbox Components

REF	PART NUMBER	DESCRIPTION	QTY
+	70050-94670	GEARBOX ASSEMBLY	1
1	70080-01297	PLUG, 1/4 NPT	1
2	01153-50865	BOLT, M8-1.25 x 65	4
3	70050-94202	OIL SEAL, M40 x 56 x 6/6.5	2
4	01153-50840	BOLT, M8-1.25 x 40	2
5	70050-94210	BOX HALF, with oil check hole	1
6	70050-94669	SHAFT, Input	1
7	70050-94208	OIL SEAL, M25 x 40 x 7	1
8	70050-94207	SHIM	2
9	70050-94211	BEARING, 30204	2
10	70050-94285	GEAR, Worm	1
11	70050-94223	PIN, M8 x 35	1
12	70050-94209	CAP, Input	1
13	70050-94224	PIN, M6 x 12	2
14	70050-94213	BOX HALF, plain	1
15	70050-94206	O-RING	2
16	70050-94215	BREATHER, 3/8 NPT	1
17	02054-50080	NUT, M8-1.25	6
18	70050-94214	PLUG	1
19	70050-94204	BEARING, 6008	2
20	70050-94203	SHIM	2
21	70050-94284	GEAR	1

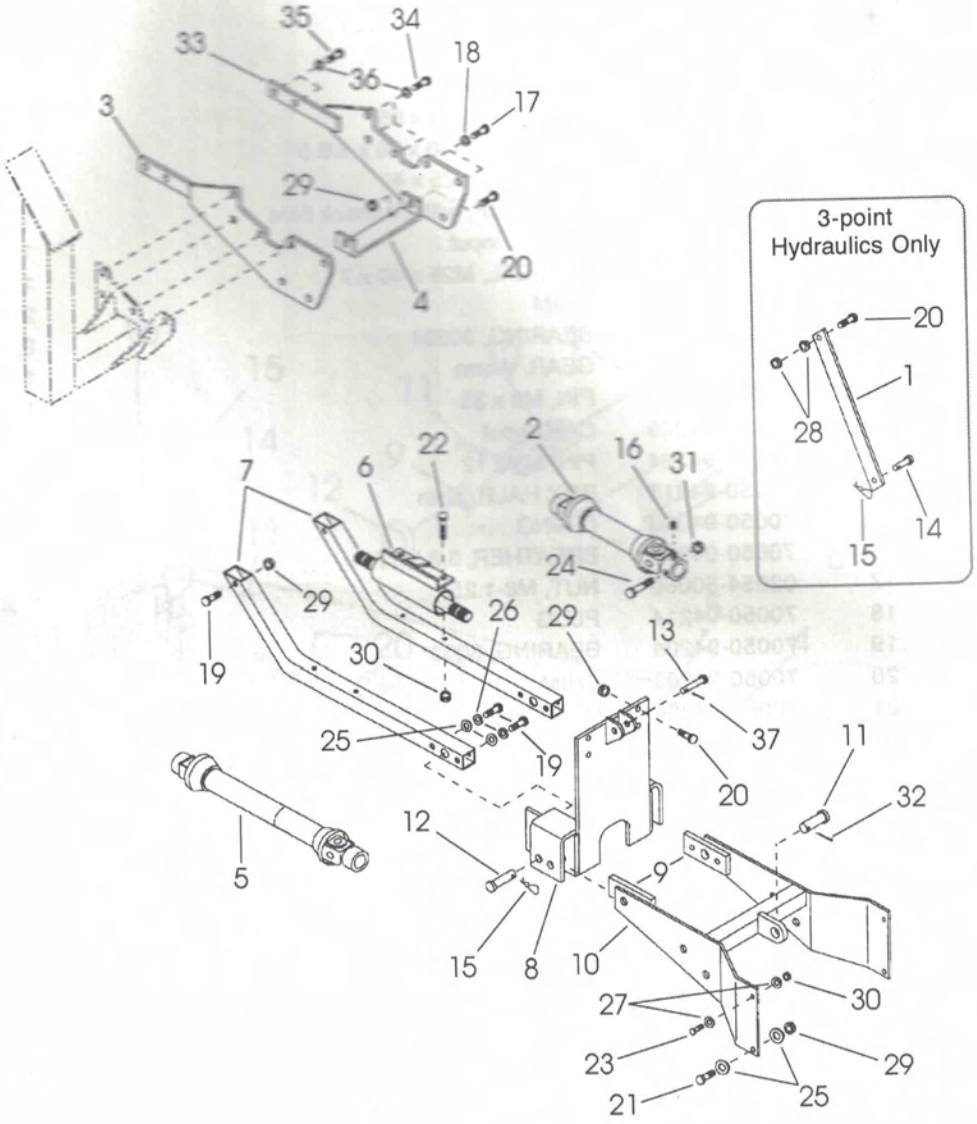
35
34
33
18
36
17
3
29
20
4
3-point
Hydraulics Only
20
1
28
14
15
22
2
16
31
7
6
24
29
26
29
13
19
30
37
25
19
20
11
32
12
5
9
15
8
10
27
30
23
29
21
25

PARTS ILLUSTRATIONS - Sub-Frame Components

REF	PART NUMBER	DESCRIPTION	QTY
1	70050-94507	BAR, Transport Lock	1
2	70050-94187	DRIVESHAFT, Front	1
3	70050-94542	PLATE, Mounting, RH	1
4	70050-94509	STIFFENER BAR	1
5	70050-94286	DRIVESHAFT, Mid	1
6	70050-94298	HOUSING, Extension Shaft	1
N/I	70050-94297	SHAFT, Extension	1
N/I	70050-94299	BEARING	2
N/I	70050-93196	SNAP RING, Internal	2
7	70050-94510	TUBE	2
8	70050-94511	PLATE, Front Mount	1
9	70050-94512	BLOCK, Spacer	2
10	70050-94513	LIFT FRAME	1
11	70050-93232	CLEVIS PIN, 1.0 x 2-1/4	1
12	75599-51880	CLEVIS PIN, 3/4 x 4.0	2
13	75599-51552	CLEVIS PIN, 1/2 x 2-5/8	1
14	75599-51520	CLEVIS PIN, 1/2 x 1.0	1
15	70050-02036	HAIRPIN CLIP, 1/8 x 2-9/16	3
16	70050-94194	SET SCREW, 3/8-16 x 3/8	1
17	01073-51435	BOLT, M14-1.5 x 35	4
18	04512-60140	LOCKWASHER, M14	4
19	75599-01550	BOLT, 1/2-13 x 2-1/2	6
20	75599-01530	BOLT, 1/2-13 x 1-1/2	8
21	75599-01525	BOLT, 1/2-13 x 1-1/4	2
22	75599-01340	BOLT, 3/8-16 x 2	2
23	75599-01325	BOLT, 3/8-16 x 1-1/4	2
24	75599-01250	BOLT, 5/16-18 x 2-1/2	1
25	75599-32115	FLAT WASHER, 1/2	8
26	75599-33015	LOCKWASHER, 1/2	4
27	75599-32113	FLAT WASHER, 3/8	4
28	75599-31015	NUT, 1/2-13	2
29	75599-31935	LOCKNUT, 1/2-13	8
30	75599-31933	LOCKNUT, 3/8-16	4
31	75599-31932	LOCKNUT, 5/16-18	1
32	75599-52330	COTTER PIN, 5/32 x 1-1/2	1
33	70050-94541	PLATE, Mounting, LH	1
34	01053-51235	BOLT, M12-1.75 x 35	6
35	10173-51225	BOLT, M12-1.25 x 25	4
36	04512-60120	LOCKWASHER, M12	10
37	75599-52220	COTTER PIN, 1/8 x 1	1

(A) Units Using Tractor 3-Point Hydraulics

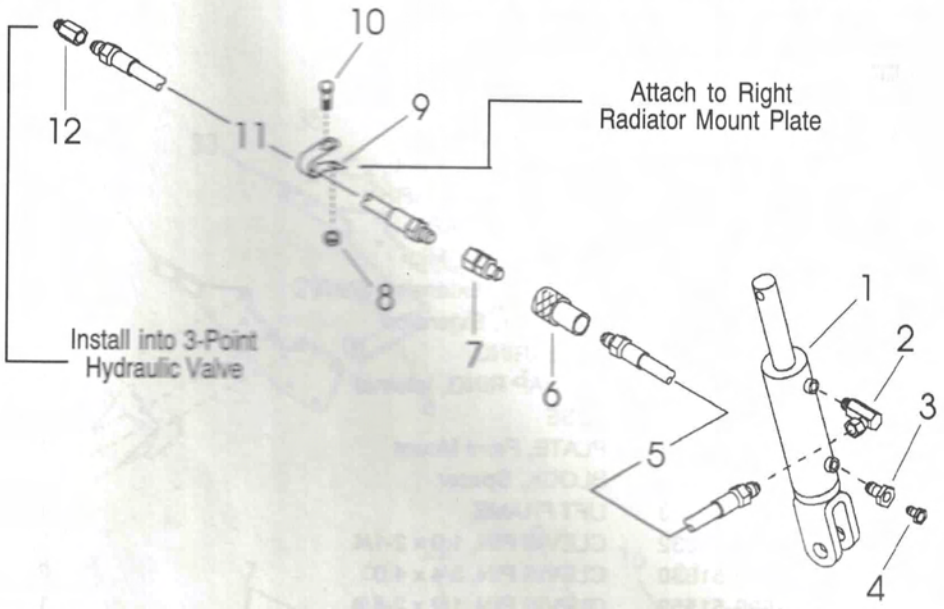

(B) Units Using Optional B2056 Hydraulics
and Units Using Loader Hydraulics

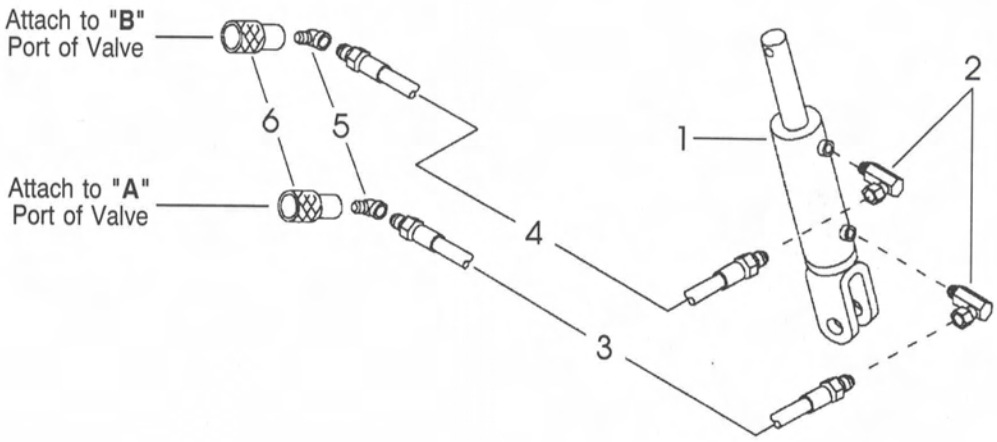

PARTS ILLUSTRATIONS - Hydraulic Lift Components

REF	PART NUMBER	DESCRIPTION	QTY
A1	70050-94445	CYLINDER	1
A2	70050-02233	ELBOW, 1/4 Swivel	1
A3	70050-94514	FITTING, 1/4 MP x 1/8 FP	1
A4	70080-01300	PLUG, Vent	1
A5	70050-94515	HOSE, 1/4 x 28	1
A6	75532-66323	COUPLER, Quick Disconnect	1
A7	75532-66222	NIPPLE, Quick Disconnect	1
A8	75599-31932	LOCKNUT, 5/16 x 18	1
A9	65722-29570	"P" CLAMP - 1/2	1
A10	75599-01215	BOLT, 5/16-18 x 3/4	1
A11	70050-02234	HOSE, 1/4 x 66	1
A12	70090-00414	ADAPTER, 1/4 ISO x 1/4 NPT	1

REF	PART NUMBER	DESCRIPTION	QTY
B1	70050-94445	CYLINDER	1
B2	70050-02233	ELBOW, 1/4 Swivel	2
B3	70050-02234	HOSE, 1/4 x 66	1
B4	70050-02284	HOSE, 1/4 x 60	1
B5	70050-02282	ELBOW, 45°	2
B6	75532-66323	COUPLER, Quick Disconnect	2

(A) Front Driveshaft

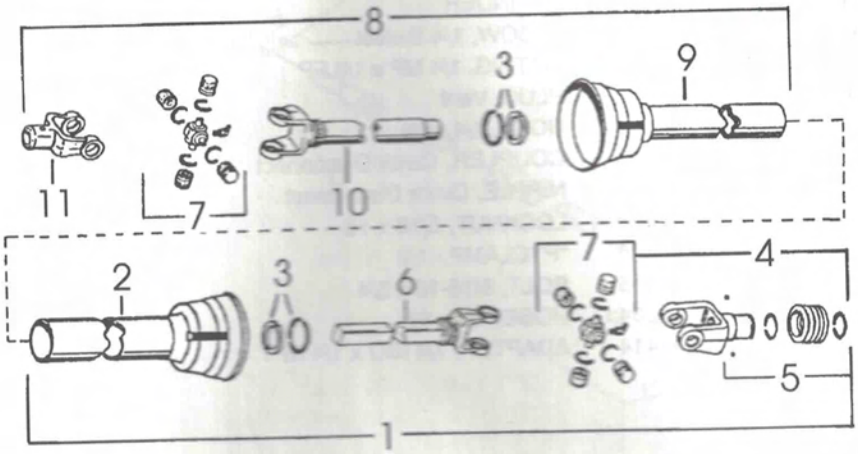

(B) Mid-Driveshaft

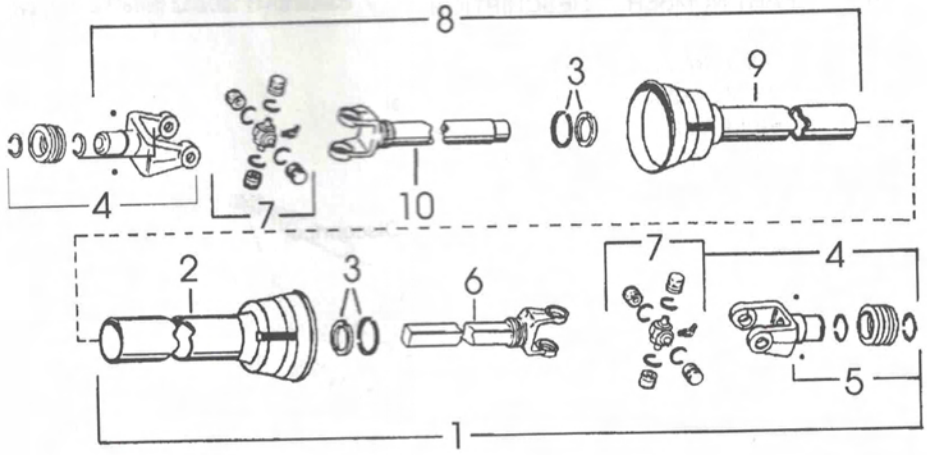

PARTS ILLUSTRATIONS - Driveshaft Components

(A) Front Driveshaft

REF	PART NUMBER	DESCRIPTION	QTY
A+	70050-94187	DRIVESHAFT ASSEMBLY, Front √√	1
A1	70050-94217	SHAFT HALF ASSY, Male	1
A2	70050-94218	SHIELD, Outer w/Sign √√	1
A3	70050-94060	BEARING & RETAINER	2
A4	70050-93921	YOKE ASSY, Quick Disconnect	1
A5	70050-93926	REPAIR KIT, Quick Disconnect	1
A6	70050-94219	YOKE & SHAFT, Male	1
A7	70050-93250	REPAIR KIT, Universal Joint	2
A8	70050-94220	SHAFT HALF ASSY, Female w/Sign √√	1
A9	70050-94221	SHIELD, Inner	1
A10	70050-94222	YOKE & SHAFT, Female	1
A11	70050-93924	YOKE ASSY, 1inch Dia. Shaft	1

(B) Mid-Driveshaft

REF	PART NUMBER	DESCRIPTION	QTY
B+	70050-94286	DRIVESHAFT ASSEMBLY, Mid √√	1
B1	70050-94287	SHAFT HALF ASSY, Male	1
B2	70050-94288	SHIELD, Outer w/Sign √√	1
B3	70050-94060	BEARING & RETAINER	2
B4	70050-93921	YOKE ASSY, Quick Disconnect	2
B5	70050-93926	REPAIR KIT, Quick Disconnect	2
B6	70050-94289	YOKE & SHAFT, Male	1
B7	70050-93250	REPAIR KIT, Universal Joint	2
B8	70050-94290	SHAFT HALF ASSY, Female w/Sign √√	1
B9	70050-94291	SHIELD, Inner	1
B10	70050-94292	YOKE & SHAFT, Female	1

√√ See page 4 for Safety Sign locations and page 5 for Part Numbers.

Indented descriptions indicate item is included with previous part.

(A) Specialty Use Items

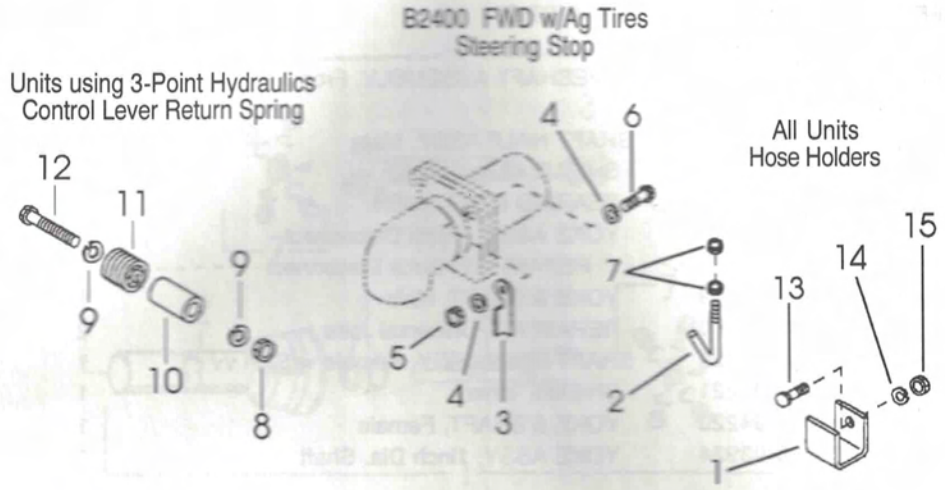

(B) Chute Rotator Handle and Handle Stand - All Units

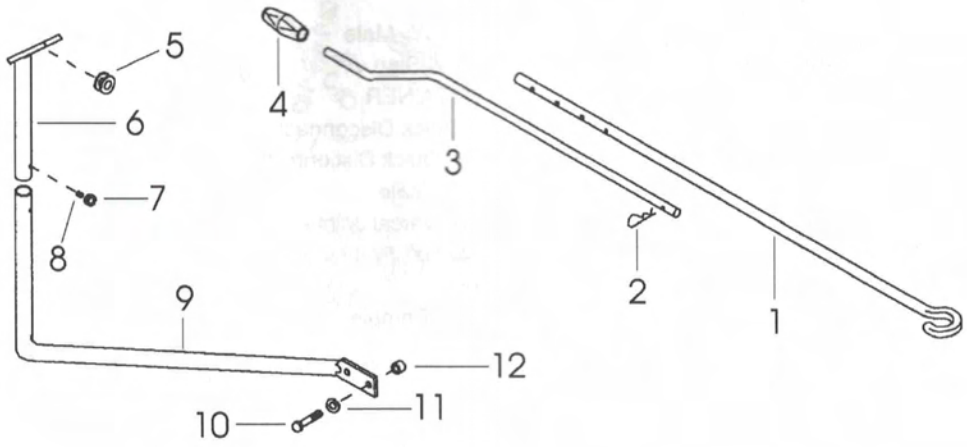

PARTS ILLUSTRATIONS - Miscellaneous Components

(A) Specialty Use Items

REF	PART NUMBER	DESCRIPTION	QTY
A1	70050-94544	BRACKET, Hose	1
A2	70050-94543	HOOK, Hose	1
A3	70050-94517	STOP, Steering RH	1
	70050-94518	STOP, Steering LH	1
A4	04512-60120	LOCKWASHER, M12	4
A5	02176-60120	NUT, M12-1.25	2
A6	01173-51245	BOLT, M12-1.25 x 45	2
A7	75599-31012	NUT, 5/16-18	2
A8	02114-50080	NUT, M8-1.25	1
A9	04512-60080	LOCKWASHER, M8	2
A10	70050-94519	COLLAR, Spring Return	1
A11	K1102-56142	SPRING, Compression	1
A12	01053-50865	BOLT, M8-1.25 x 65	1
A13	01073-51445	BOLT, M14-1.5 x 45	1
A14	04512-60140	LOCKWASHER, M14	1
A15	02176-60140	NUT, M14-1.5	1

(B) Chute Rotator Handle and Handle Stand - All Units

REF	PART NUMBER	DESCRIPTION	QTY
B1	70050-94442	ROTATION TUBE, Upper - 50"	1
B2	70050-02036	HAIRPIN CLIP, 1/8 x 2-9/16	1
B3	70050-94156	HANDLE	1
B4	70050-94165	GRIP	1
B5	70050-94166	RUBBER GROMMET	1
B6	70050-94315	ANCHOR TUBE	1
B7	75599-31033	JAM NUT, 3/8-16	1
B8	70050-94194	SET SCREW, 3/8-16 x 3/8	1
B9	70050-94520	HANDLE SUPPORT	1
B10	01175-61035	BOLT, M10-1.25 x 35	2
	01175-61045	BOLT, M10-1.25 x 45 (HST Tractors)	2
B11	04512-60100	LOCKWASHER, M10	2
B12	70050-94521	SPACER (HST Tractors)	2

NUMERICAL INDEX

PART NUMBER	PAGE	REF	CODE
70000-70413	Op. & Pts. Man.		251551
70050-01589	5	N/I	221290
70050-02148	5	1	145651
70050-02233	41	A2	250559
70050-02233	41	B2	250559
70050-02234	41	A11	250560
70050-02234	41	B3	250560
70050-02282	41	B5	444830
70050-02284	41	B4	250306
70050-93196	39	6	967017
70050-93250	43	A7	121868
70050-93250	43	B7	121868
70050-93896	5	10	160459
70050-93921	43	A4	161386
70050-93921	43	B4	161386
70050-93924	43	A11	160126
70050-93926	43	A5	160131
70050-93926	43	B5	160131
70050-93958	5	3	948250
70050-94057	5	4	150299
70050-94060	43	A3	161435
70050-94060	43	B3	161435
70050-94138	31	8	251013
70050-94141	31	5	251017
70050-94152	35	9	251100
70050-94153	35	7	251115
70050-94156	45	B3	251028
70050-94159	35	5	251135
70050-94160	31	9	251061
70050-94160	33	2	251061
70050-94161	33	7	251183
70050-94162	31	10	251060
70050-94162	33	3	251060
70050-94164	35	10	251078
70050-94165	45	B4	251029
70050-94166	45	B5	251073
70050-94167	35	4	251114
70050-94168	35	3	251113
70050-94169	35	2	251079
70050-94175	35	6	251009
70050-94176	31	13	251136
70050-94178	5	5	251376
70050-94179	5	6	251375
70050-94180	5	7	251374
70050-94181	5	8	251380
70050-94187	33	1	251409
70050-94187	39	2	251409
70050-94187	43	A+	251409
70050-94191	33	8	150335
70050-94202	37	3	251381
70050-94203	37	20	251382
70050-94204	37	19	251383
70050-94206	37	15	251397
70050-94207	37	8	251386
70050-94208	37	7	251387
70050-94209	37	12	251388
70050-94210	37	5	251389
70050-94211	37	9	251390
70050-94213	37	14	251392
70050-94214	37	18	251393
70050-94215	37	16	251394
70050-94217	43	A1	251303
70050-94218	43	A2	251304
70050-94219	43	A6	251305

NUMERICAL INDEX - Continued

PART NUMBER	PAGE	REF	CODE	PART NUMBER	PAGE	REF	CODE
70050-94220	43	A8	251309	70050-94297	39	6	251366
70050-94221	43	A9	251373	70050-94298	39	6	251419
70050-94222	43	A10	251396	70050-94299	39	6	251421
70050-94223	37	11	251385				
70050-94224	37	13	967148	70050-94315	45	B6	251688
70050-94257	5	N/I	251248				
70050-94258	5	N/I	251249	70050-94442	45	B1	251369
70050-94259	5	9	251505	70050-94445	41	A1	250642
70050-94260	31	12	251515	70050-94445	41	B1	250642
70050-94261	31	12	251510				
70050-94262	31	12	251225	70050-94507	39	1	251785
70050-94263	31	12	251220	70050-94509	39	4	251777
70050-94264	31	1	251513	70050-94510	39	7	251772
70050-94265	31	1	251216	70050-94511	39	8	251765
70050-94266	31	6	251311	70050-94512	39	9	251769
70050-94267	31	4	251185	70050-94513	39	10	251762
70050-94269	31	3	251219	70050-94514	41	A3	250644
70050-94272	33	12	251245	70050-94515	41	A5	457450
70050-94274	33	4	251227	70050-94517	45	A3	251766
70050-94275	33	5	251240	70050-94518	45	A3	251781
70050-94276	33	12	251214	70050-94519	45	A10	251783
70050-94277	33	9	251213	70050-94520	45	B9	251775
70050-94279	31	7	251500	70050-94521	45	B12	160747
70050-94280	31	7	251300	70050-94541	39	33	290013
70050-94281	35	1	251315	70050-94542	39	3	290011
70050-94282	35	8	251314	70050-94543	45	A2	290008
70050-94283	33	11	251239	70050-94544	45	A1	290009
70050-94284	37	21	251250	70050-94556	33	10	251528
70050-94285	37	10	251251				
70050-94286	39	5	251353	70050-94669	37	6	251266
70050-94286	43	B+	251353	70050-94670	31	2	251265
70050-94287	43	B1	251252	70050-94670	37	+	251265
70050-94288	43	B2	251253	70050-94674	33	6	251544
70050-94289	43	B6	251254	70050-94675	31	11	251545
70050-94290	43	B8	251255	70050-94676	31	11	251546
70050-94291	43	B9	251256				
70050-94292	43	B10	251257	70080-01300	41	A4	141220

PART NUMBER	PAGE	REF	CODE
70080-01438	5	2	457114
70090-00414	41	A12	250265
75532-66222	41	A7	251780
75532-66323	41	B6	251779
75532-66323	41	A6	251779
K1102-56142	45	A11	251784

Kubota®

KUBOTA TRACTOR CORPORATION
Post Office Box 2992
Torrance, California 90509-2992

8/96
© All Rights Reserved
Printed in U.S.A.

251551