U.S.A. : **KUBOTA TRACTOR CORPORATION**
3401 Del Amo Blvd., Torrance, CA 90503, U.S.A.
Telephone : (310)370-3370
Western Division : 1175 S. Guild Avc., Lodi, CA 95240
Telephone : (209)334-9910
Central Division : 14855 FAA Blvd., Fort Worth, TX 76155
Telephone : (817)571-0900
Northern Division : 6300 at One Kubota Way, Groveport, OH 43125
Telephone : (614)835-1100
Southeast Division : 1025 Northbrook Parkway, Suwanee, GA 30024
Telephone : (770)995-8855

Canada : **KUBOTA CANADA LTD.**
5900 14th Avenue, Markham, Ontario, L3S 4K4, Canada
Telephone : (905)294-7477

France : **KUBOTA EUROPE S.A.S**
19-25, Rue Jules Vercruysse, Z.I. BP88, 95101 Argenteuil Cedex, France
Telephone : (33)1-3426-3434

Italy : **KUBOTA EUROPE S.A.S Italy Branch**
Via Grandi, 29 20068 Peschiera Borrome (MI) Italy
Telephone : (39)02-51650377

Germany : **KUBOTA (DEUTSCHLAND) GmbH**
Senefelder Str. 3-5 63110 Rodgau /Nieder-Roden, Germany
Telephone : (49)6106-873-0

U.K. : **KUBOTA (U.K.) LTD.**
Dormer Road, Thame, Oxfordshire, OX9 3UN, U.K.
Telephone : (44)1844-214500

Spain : **KUBOTA ESPAÑA S.A.**
Avenida Recomba No.5, Poligno Industrial la Laguna, Leganes, 28914 (Madrid) Spain
Telephone : (34)91-508-6442

Australia : **KUBOTA TRACTOR AUSTRALIA PTY LTD.**
25-29 Permas Way, Truganina, VIC 3029, Australia
Telephone : (61)-3-9394-4400

Malaysia : **SIME KUBOTA SDN. BHD.**
No.3 Jalan Sepadu 25/123 Taman Perindustrian Axis,
Seksyen 25, 40400 Shah Alam, Selangor Darul Ehsan Malasia
Telephone : (60)3-736-1388

Philippines : **KUBOTA PHILIPPINES, INC.**
155 Panay Avenue, South Triangle Homes, 1103 Quezon City, Philippines
Telephone : (63)2-9201071

Taiwan : **SHIN TAIWAN AGRICULTURAL MACHINERY CO., LTD.**
16, Fengping 2nd Rd, Taliao Shiang Kaohsiung 83107, Taiwan R.O.C.
Telephone : (886)7-702-2333

Indonesia : **P.T. KUBOTA INDONESIA**
JALAN. Setyabudi 279, Semarang, Indonesia
Telephone : (62)-24-7472849

Thailand : **SIAM KUBOTA CORPORATION CO., LTD.**
101/19-24 Moo 20, Navanakorn Industrial Estate, Tambon Khlongnueng, Amphur Khlongluang,
Pathumthani 12120, THAILAND
Telephone : (66)2-909-0300

Korea : **KUBOTA KOREA CO., LTD.**
106-24 Mongsan-Ri, Mankyung-Up, Kimje-City, Chonrapuk-Do, KOREA
Telephone : (82)-63-544-5822

India : **KUBOTA AGRICULTURAL MACHINERY INDIA PVT. LTD.**
Regus, Level 2 Altius, Olympia Tech Park, No.1 SIDCO Industrial Estate, Guindy, Chennai 600032, TN, India
Telephone : (91)-44-4299-4237

Vietnam : **KUBOTA VIETNAM CO., LTD.**
Lot B-3A2-CN, My Phuoc 3 Industrial Park, Ben Cat District, Binh Duong Province, Vietnam
Telephone : (84)-650-3577-507

KUBOTA Corporation

English (U.S.A.)
Code No. K7311-7122-3

R T V 5 0 0

OPERATOR'S MANUAL

KUBOTA
UTILITY VEHICLE
RTV500

1AYAAAYAP0030

READ AND SAVE THIS MANUAL

PRINTED IN U.S.A.

ABBREVIATION LIST

Abbreviations	Definitions
2WD	Two Wheel Drive
4WD	Four Wheel Drive
API	American Petroleum Institute
ASABE	American Society of Agricultural and Biological Engineers, USA
ASTM	American Society for Testing and Materials, USA
DIN	Deutsches Institut für Normung, GERMANY
fpm	Feet Per Minute
HST	Hydrostatic Transmission
Km/h	Kilometers Per Hour
MPH	Miles Per Hour
m/s	Meters Per Second
PTO	Power Take Off
RH/LH	Right-hand and left-hand sides are determined by facing in the direction of forward travel
ROPS	Roll-Over Protective Structures
rpm	Revolutions Per Minute
r/s	Revolutions Per Second
SAE	Society of Automotive Engineers, USA
VHT	Variable Hydro Transmission

California Proposition 65

⚠ WARNING ⚠

The engine exhaust from this product contains chemicals known to the State of California to cause cancer, birth defects or other reproductive harm.

IMPORTANT

The engine in this machine is equipped by the manufacture with a standard spark arrester.
It is a violation of California Public Resource Code Section 4442 to use or operate this engine on or near any forest-covered, brush-covered land, or grass- covered land unless the exhaust system is equipped with a working spark arrester meeting state laws. Other states or federal areas may have similar laws.

KUBOTA Corporation is ···

Since its inception in 1890, KUBOTA Corporation has grown to rank as one of the major firms in Japan.

To achieve this status, the company has through the years diversified the range of its products and services to a remarkable extent, until today, 19 plants and 16,000 employees produce over 1,000 different items, large and small.

All these products and all the services which accompany them, however, are unified by one central commitment. KUBOTA makes products which, taken on a national scale, are basic necessities. Products which are indispensable, products intended to help individuals and nations fulfill the potential inherent in their environment. For KUBOTA is the Basic Necessities Giant.

This potential includes water supply, food from the soil and from the sea, industrial development, architecture and construction, transportation.

Thousands of people depend on KUBOTA's know-how, technology, experience and customer service. You too can depend on KUBOTA.

UNIVERSAL SYMBOLS

As a guide to the operation of your vehicle, various universal symbols have been utilized on the instruments and controls. The symbols are shown below with an indication of their meaning.

- Safety Alert Symbol
- Engine Coolant-Temperature
- Brake & Parking Brake
- Battery Charging Condition
- Engine Oil-Pressure
- Turn Signal
- Engine-Stop
- Engine-Run
- Engine-Diagnostic
- Starter Control
- Differential Lock
- Master Lighting Switch
- Headlight
- Audible Warning Device
- Four-Wheel Drive-On
- Four-Wheel Drive-Off
- Lock
- Unlock

FOREWORD

You are now the proud owner of a KUBOTA Vehicle. This vehicle is a product of KUBOTA quality engineering and manufacturing. It is made of excellent materials and under a rigid quality control system. It will give you long, satisfactory service. To obtain the best use of your vehicle, please read this manual carefully. It will help you become familiar with the operation of the vehicle and contains many helpful hints about vehicle maintenance. This manual contains instructions for minor maintenance, but information about major repairs is outlined in the KUBOTA Work Shop Manual and should be performed only by a KUBOTA Dealer Technician. It is KUBOTA's policy to utilize as quickly as possible every advance in our research. The immediate use of new techniques in the manufacture of products may cause some small parts of this manual to become outdated. KUBOTA distributors and dealers will have the most up-to-date information. Please do not hesitate to consult with them.

⚠ SAFETY FIRST

This symbol, the industry's "Safety Alert Symbol", is used throughout this manual and on labels on the machine itself to warn of the possibility of personal injury. Read these instructions carefully. It is essential that you read the instructions and safety regulations before you attempt to assemble or use this unit.

⚠ **DANGER :**	Indicates an imminently hazardous situation which, if not avoided, will result in death or serious injury.
⚠ **WARNING :**	Indicates a potentially hazardous situation which, if not avoided, could result in death or serious injury.
⚠ **CAUTION :**	Indicates a potentially hazardous situation which, if not avoided, may result in minor or moderate injury.
IMPORTANT :	Indicates that equipment or property damage could result if instructions are not followed.
NOTE :	Gives helpful information.

CONTENTS

SAFE OPERATION

Careful operation is your best insurance against an accident.
Read and understand this Operator's Manual carefully before operating the vehicle.
All operators, no matter how much experience they may have, should read this and other related manuals before operating the vehicle or any implement attached to it. It is the owner's obligation to instruct all operators in safe operation.

1. BEFORE OPERATING THE VEHICLE

1. Know your equipment and its limitations. Read this entire manual before attempting to start and operate the vehicle.
2. Pay special attention to the Danger, Warning and Caution labels on the vehicle.
3. Do not remove Roll-Over Protective Structures (ROPS) for any application and fasten seat belts at all times. This combination will reduce the risk of serious injury or death, should the vehicle be upset.
   If the ROPS is loosened or removed for any reason, make sure that all parts are reinstalled correctly before operating the vehicle.
   Never modify or repair a ROPS because welding, bending, drilling, grinding, or cutting may weaken the structure.
   A damaged ROPS structure must be replaced, not repaired or revised.
   If any structural member of the ROPS is damaged, replace the entire structure at your local KUBOTA Dealer.

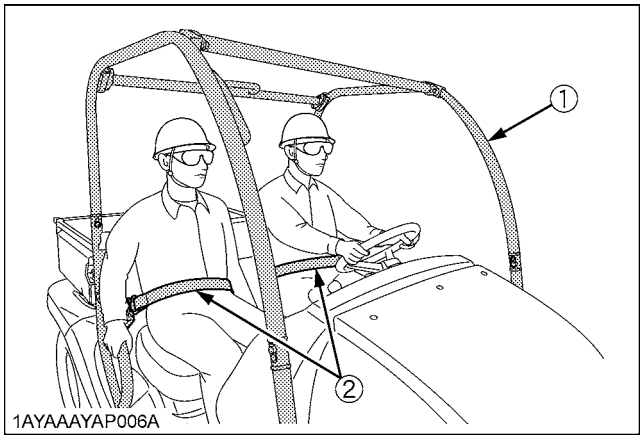

(1) ROPS
(2) Seat belt

4. Always use the seat belts. Check the seat belts regularly and replace if frayed or damaged.
5. Do not operate the vehicle or any implement attached to it while under the influence of alcohol, medication, controlled substances or while fatigued.
6. Carefully check the vicinity before operating the vehicle or any implement attached to it. Check for overhead clearance which may interfere with the CAB or ROPS. Do not allow any bystanders around or near the vehicle during operation.
7. Never allow anyone without a valid driver's license to operate this vehicle.
8. Before allowing other people to use your vehicle, explain how to operate and have them read this manual before operation.
9. Never wear loose, torn, or bulky clothing around the vehicle. It may catch on moving parts or controls, leading to the risk of an accident. Use additional safety items, e.g. helmet, safety boots or shoes, eye and hearing protection, gloves, etc., as appropriate or required.
10. This vehicle is for off road use only.
    KUBOTA does not recommend operating on public roads.
11. In addition to the driver, only one passenger should ride in the vehicle.
    Minimum age for passenger is 5 years old.
12. Keep all shields in place and stay away from all moving parts.
13. Check brakes, speed control pedal, and other mechanical parts for improper adjustment and wear.
    Replace worn or damaged parts promptly. Check the tightness of all nuts and bolts regularly. (For further details, see "MAINTENANCE" section.)
14. Keep your vehicle clean. Dirt, grease, and trash build up may contribute to fires and lead to personal injury.
15. Use only implements meeting the specifications listed under "VEHICLE LIMITATIONS" in this manual or implements approved by KUBOTA.
16. The maximum cargo capacity of this vehicle is 200kg. Reduce cargo capacity to match operating conditions. Do not carry anything which raises the center-of-gravity and sticks outside the cargo bed.
17. Do not modify the vehicle. Unauthorized modification may affect the function of the vehicle, which may result in personal injury.

2. OPERATING THE VEHICLE

◆ Starting

1. Always sit in the operator's seat when starting engine or operating levers or controls.
2. Before starting the engine, make sure that all levers are in their neutral positions, that the parking brake is engaged.
3. Do not start engine by shorting across starter terminals or bypassing the safety start switch. The vehicle may start in gear and move if normal starting circuitry is bypassed.
4. Be sure that the operator (and passenger) seat belts are fastened.
5. Do not operate or idle engine in a non-ventilated area. Carbon monoxide gas is colorless, odorless, and deadly.

◆ Operating

1. Do not wear headphones while operating.
2. Pull only from the trailer hitch (if equipped). Never hitch to axle housing or any other point except trailer hitch; such arrangements will increase the risk of serious personal injury or death due to a vehicle upset.

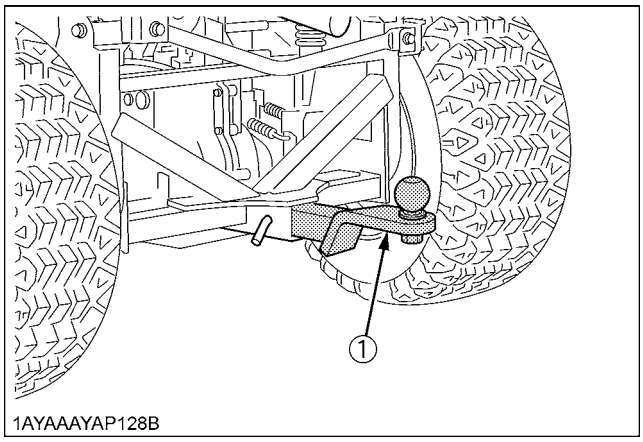

1AYAAAYAP128B

(1) Trailer hitch (if equipped)

3. Keep all shields and guards in place. Replace any that are missing or damaged.
4. Avoid sudden starts. To avoid upsets, slow down when turning, on uneven ground, and before stopping.
5. The vehicle cannot turn with the differential locked and attempting to do so could be dangerous.
6. Do not operate near ditches, holes, embankments, or other ground surface features which may collapse under the vehicle's weight. The risk of vehicle upset is even higher when the ground is loose or wet.
7. Watch where you are going at all times. Watch for and avoid obstacles. Be alert at row ends, near trees, and other obstructions.
8. When working in groups, always let the others know what you are going to do before you do it.
9. Never try to get on or off a moving vehicle.

◆ Safety for children

Tragedy can occur if the operator is not alert to the presence of children. Children generally are attracted to vehicles and the work they do.

1. Never assume that children will remain where you last saw them.
2. Keep children out of the work area and under the watchful eye of another responsible adult.
3. Be alert and shut your vehicle down if children enter the work area.
4. Never carry children in the cargo bed. There is no safe place for them to ride. No person under the age of 5 may ride as a passenger in this vehicle. A passenger under 5 years of age requires special restraints which are not available with this vehicle.
5. Never allow children to operate the vehicle even under adult supervision.
6. Never allow children to play on the vehicle or on the implement.
7. Use extra caution when backing up. Look behind and down to make sure area is clear before moving.
8. Whenever possible, park your vehicle on a firm, flat and level surface. If this is not possible, park it across the slope. Set the parking brake(s), lower the implements to the ground, remove the key from the ignition and chock the wheels.

◆ Operating on slopes

Slopes are a major factor related to loss-of-control and tip-over accidents, which can result in severe injury or death. All slopes require extra caution.

1. Travel straight up or down hill.
2. Reduce load when operating on hilly or over rough terrain.
3. Keep front wheels straight at crest of hill or going over bumps.
4. Do not stop or start suddenly when going uphill or downhill. Be especially cautious when changing direction on slopes.
5. If vehicle stops or loses power going up a hill, lock parking brake to hold vehicle on slope. Maintain direction of travel and release brake slowly. Back straight downhill while maintaining control. Do not turn vehicle sideways. Vehicle is more stable in a straight forward or rearward position.
6. When riding on soft terrain, turn front wheels slightly uphill to keep vehicle on a straight line across the hill.
7. If the vehicle begins to tip, turn front wheels downhill to gain control before proceeding.
   (1) To avoid upsets, always back up steep slopes. If you cannot back up the slope or if you feel uneasy on it, do not operate on it. Stay off slopes too steep for safe operation.

(2) Driving forward out of a ditch, mired condition or up a steep slope increases the risk of a vehicle to be upset backward. Always back out of these situations. Extra caution is required with four-wheel drive mode because the increased traction can give the operator false confidence in the vehicle's ability to climb slopes.
(3) Keep all movement on slopes slow and gradual. Do not make sudden changes in speed or direction.

◆ **Operation in inclement conditions**

1. Only operate during daylight or with good artificial light.
2. Operate vehicle in an open, unobstructed area.
3. Use helmet and/or protective gear for certain operating conditions.
4. Reduce speed according to trail, terrain and visibility conditions.
5. Never drive exceeding the limit of visibility. Slow down near crest of hill until getting a clear view of the other side.
6. Stay alert for holes, rocks and other hidden hazards in the terrain.
7. Never cross any body of water where depth may be unknown to the operator (Deep water is considered anything above the bottom edge of the axle cap). Choose a course within the waterway where both banks have a gradual incline. Cross at a point known to be safe.

◆ **Driving the vehicle at high speeds**

1. Check the front wheel engagement. The braking characteristics are different between two and four wheel drive. Be aware of the difference and use carefully.
2. Always slow the vehicle down before turning. Turning at high speed may tip the vehicle over.
3. Turn the headlights on.
4. Drive at speeds that allow you to maintain control at all times.
5. Do not apply the differential lock while traveling at high speeds. The vehicle may run out of control.
6. Avoid sudden motions of the steering wheel as they can lead to a dangerous loss of stability. The risk is especially great when the vehicle is traveling at high speeds.

◆ **Other miscellaneous**

1. Clean platform if dirty and remove any debris from around foot controls.
2. Always keep both hands on the steering wheel.
3. Always keep arms and legs inside the operating compartment.
4. Never operate the vehicle while standing.
5. Do not tow a cart with any riders on it.
6. Never attempt wheelies, jumps or other stunts.

3. HAULING LOADS IN THE CARGO BED

1. No riders in cargo bed or anywhere else.
2. Do not overload vehicle. Securely anchor all loads.
3. Be sure load is evenly distributed.
4. Reduce cargo capacity when operating on rough or hilly terrain.
5. Balance loads evenly and secure them. Braking could shift the load and affect vehicle stability.
6. Never operate vehicle with the cargo bed raised.
7. Operate cargo bed dump with vehicle stationary and parking brake locked. Do not dump while moving.
8. Operate the cargo bed dump on level ground only.
9. Do not place hands or body under the cargo bed when lowering bed.

4. PARKING THE VEHICLE

1. Lower all implements to the ground, place all control levers in their neutral positions, set the parking brake, stop the engine, and remove the key.
2. Make sure that the vehicle has come to a complete stop before dismounting.
3. Avoid parking on steep slopes, if possible park on flat ground, if not, park across a slope, always with attachment on the ground.

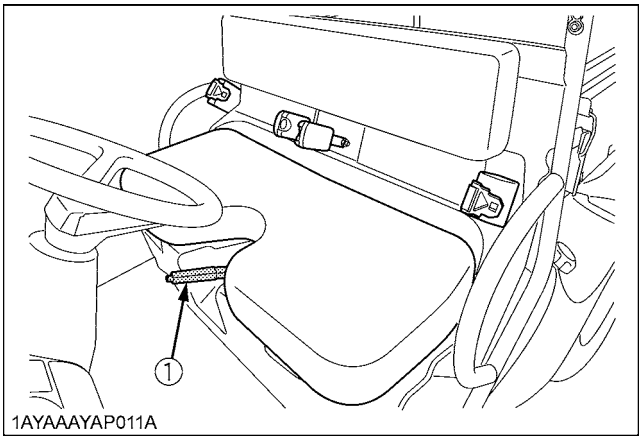

(1) Parking brake lever

5. TRANSPORTING

1. Disengage power to attachment(s) when transporting or not in use.
2. Do not tow this vehicle. Use a suitable truck or trailer when transporting on public roads.
3. Use extra care when loading or unloading the vehicle into a trailer or truck.

6. SERVICING THE VEHICLE

Before servicing the vehicle, park it on a firm, flat and level surface, set the parking brake, lower all implements to the ground, place the range gear shift lever in neutral, stop the engine and remove the key.

1. Allow the vehicle time to cool off before working on or near the engine, muffler, radiator, etc.
2. Always stop the engine before refueling. Avoid spills and overfilling.
3. Do not smoke when working around battery or when refueling. Keep all sparks and flames away from battery and fuel tank. The battery presents an explosive hazard, because it gives off hydrogen and oxygen especially when recharging.
4. Before "jump starting" a dead battery, read and follow all of the instructions. (See "JUMP STARTING" in "OPERATING THE ENGINE" section.)
5. Keep first aid kit and fire extinguisher handy at all times.
6. Disconnect the battery's ground cable before working on or near electric components.
7. To avoid the possibility of battery explosion, do not use or charge the refillable type battery if the fluid level is below the LOWER (lower limit level) mark. Check the fluid level regularly and add distilled water as required so that the fluid level is between the UPPER and LOWER marks.
8. To avoid sparks from an accidental short circuit, always disconnect the battery's ground cable (-) first and reconnect it last.

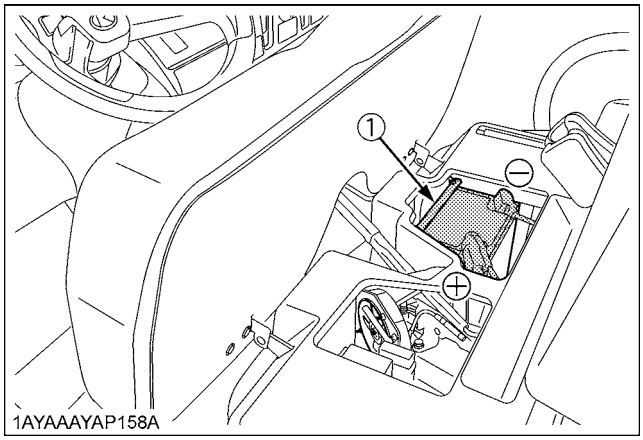

(1) Battery

9. Do not remove radiator cap while coolant is hot. When cool, slowly rotate cap to the first stop and allow sufficient time for excess pressure to escape before removing the cap completely. If the vehicle has a coolant recovery tank, add coolant or water to the tank, not the radiator. (See "Checking Coolant Level" in "DAILY CHECK" in "PERIODIC SERVICE" section.)
10. Do not attempt to mount a tire on a rim. This should be done by a qualified person with the proper equipment.
11. Always maintain the correct tire pressure. Do not inflate tires above the recommended pressure shown in the operator's manual.

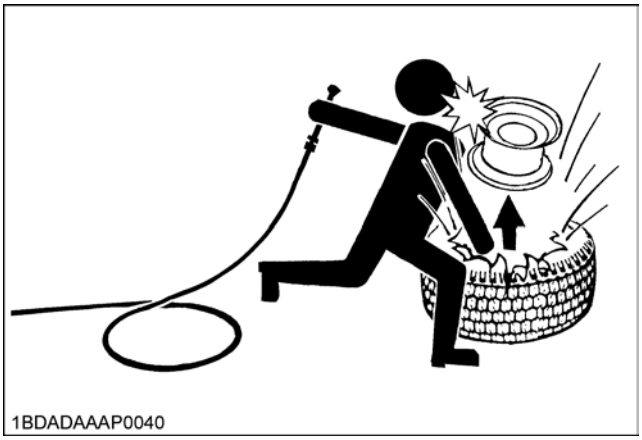

12. Securely support the vehicle when changing wheels.
13. Make sure that wheel bolts have been tightened to the specified torque.
14. Do not work under any hydraulically supported devices. They can settle, suddenly leak down, or be accidentally lowered. If it is necessary to work under the vehicle or any vehicle elements for servicing or adjustment, securely support them with stands or suitable blocking beforehand.
15. Escaping hydraulic fluid under pressure has sufficient force to penetrate skin causing serious personal injury. Before disconnecting hydraulic lines, be sure to release all residual pressure. Before applying pressure to the hydraulic system, make sure that all connections are tight and that all lines, pipes, and hoses are free of damage.
    "High pressure fluid - Injection into body" hazard warning.

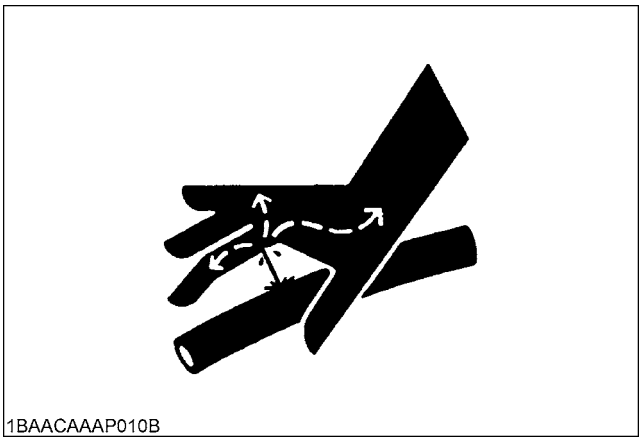

16. Fluid escaping from pinholes may be invisible. Do not use hands to search for suspected leaks; use a piece of cardboard or wood. Use of safety goggles or other eye protection is also highly recommended. If injured by escaping fluid, see a medical doctor at once. This fluid will produce gangrene or severe allergic reaction.

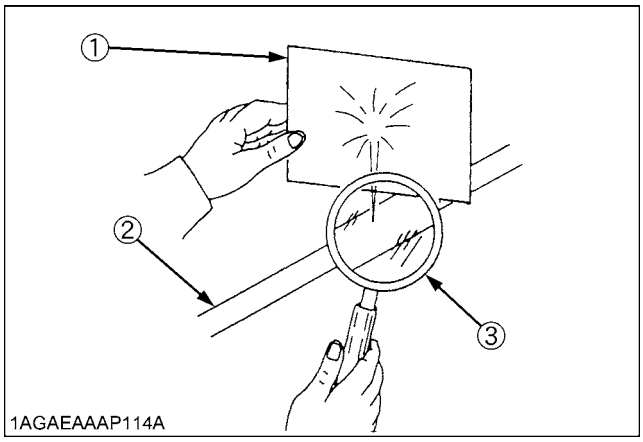

(1) Cardboard
(2) Hydraulic line
(3) Magnifying glass

7. DANGER, WARNING AND CAUTION LABELS

(1) Part No. K7311-6565-1

1AYAAAYAP0920

(2) Part No. K7311-6522-1

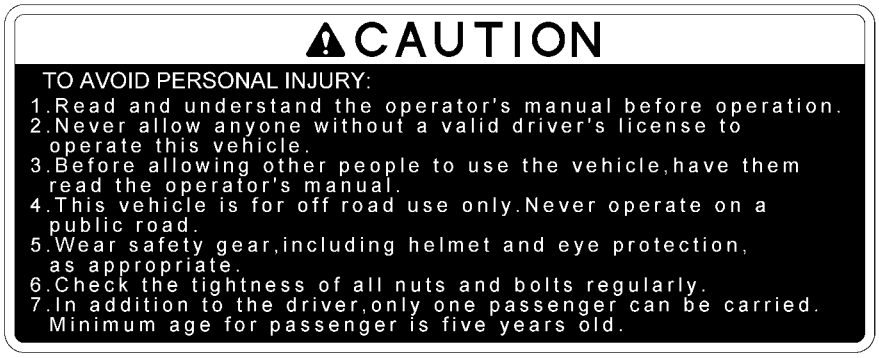

1AYAAAYAP0930

(3) Part No. K7311-6530-1

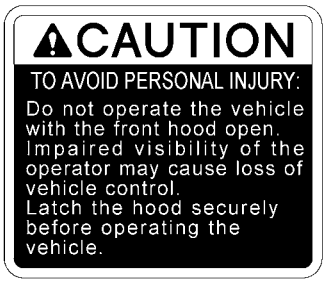

1AYAAAYAP0940

(4) Part No. K7311-6524-1

1AYAAAYAP0950

(5) Part No. K7311-6533-3

1AYAAAYAP0960

1AYAAAYAP0860

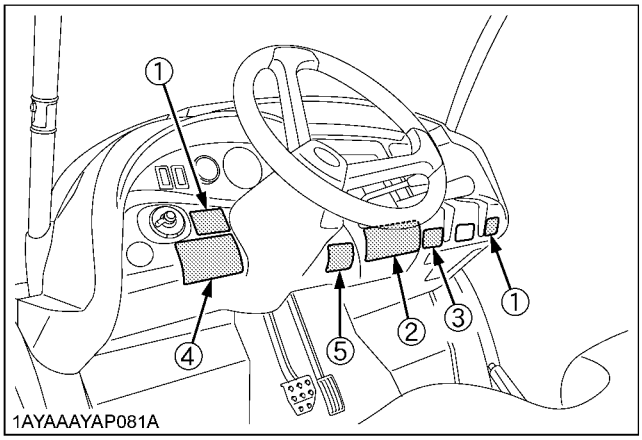

1AYAAAYAP081A

(1) Part No. K7311-6525-2

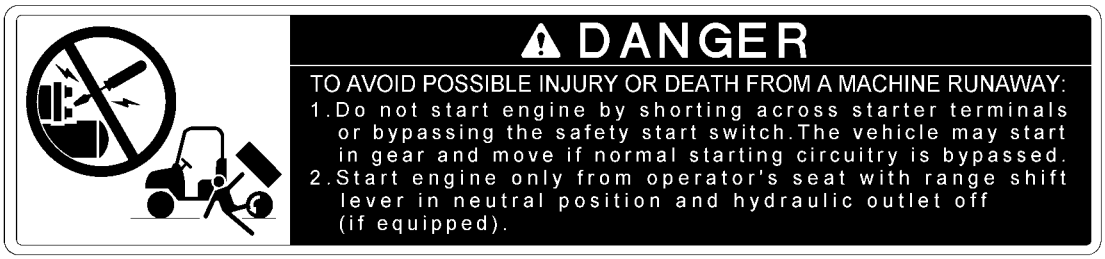

1AYAAAYAP0970

(2) Part No. K7561-6541-2

1AYAAAYAP0980

(3) Part No. K7311-6526-2

1AYAAAYAP0990

(4) Part No. K7311-6537-1

Gasoline fuel only No fire

1AYAAAYAP1000

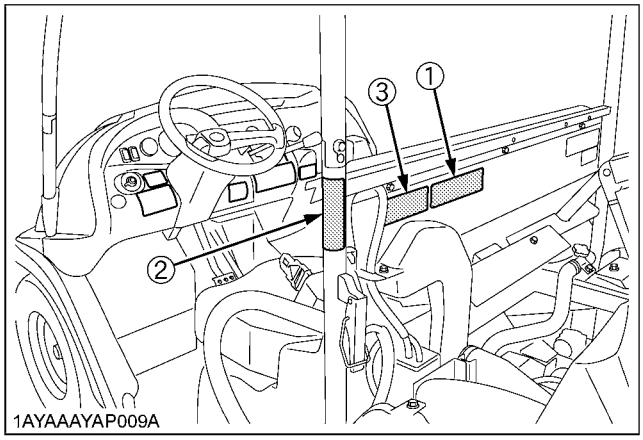

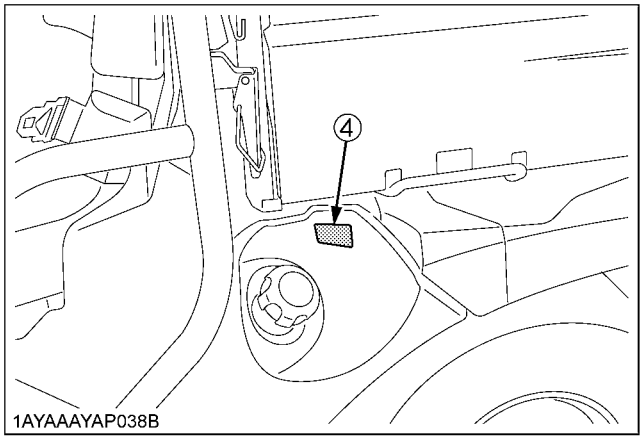

1AYAAAYAP0870

(1) Part No. K7311-6542-2

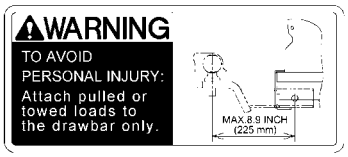

1AYAAAYAP1010

(2) Part No. K7311-6549-2

1AYAAAYAP132A

(3) Part No. K1221-6118-1

1BDABDMAP013A

(8) Part No. K7311-6559-1

1AYAAAYAP156A

(4) Part No. K7311-6560-1
Do not get your hands close to fan.

1AYAAAYAP1160

(5) Part No. K7311-6557-1

1AYAAAYAP1150

(6) Part No. K7311-6558-2

1AYAAAYAP1460

(7) Part No. K2651-6568-1

1AYAACAAP1000

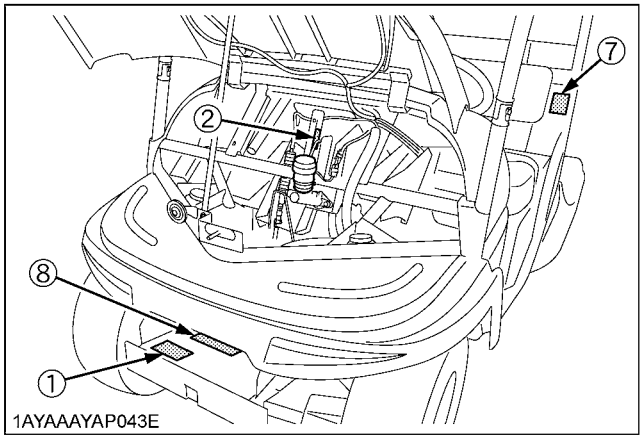

1AYAAAYAP043E

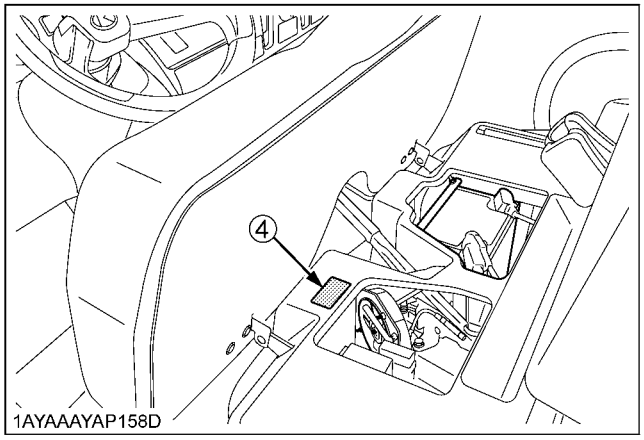

1AYAAAYAP158D

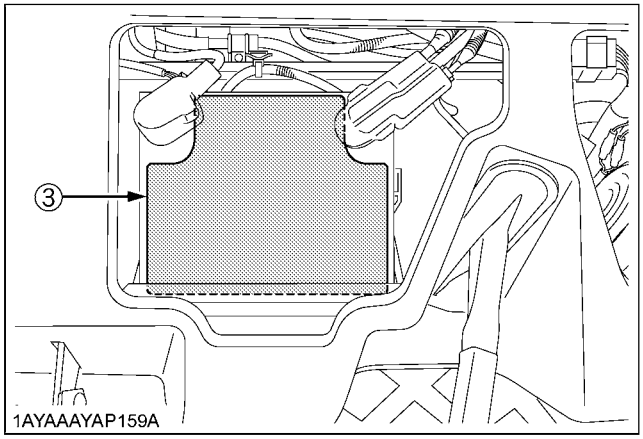

1AYAAAYAP159A

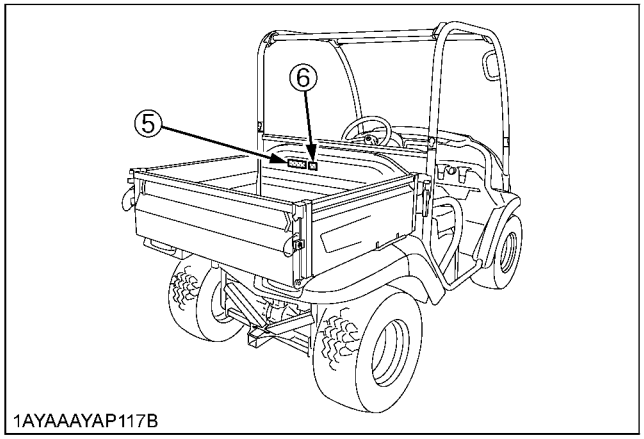

1AYAAAYAP117B

1AYAAAYAP162A

(1) Part No. K7311-6546-1

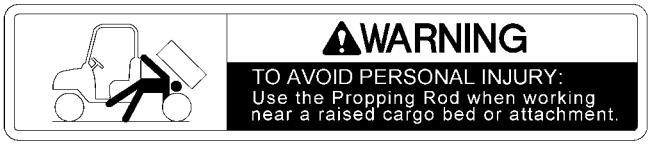

1AYAAAYAP1020

(2) Part No. K7311-6547-2
Do not touch hot surface like muffler, etc.

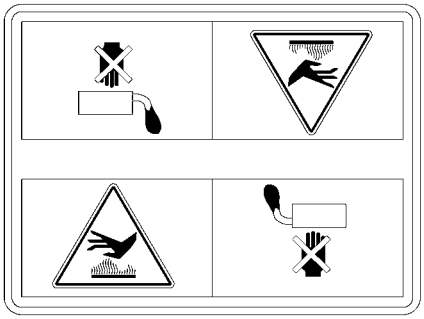

1AYAAAYAP1030

(3) Part No. K7311-6544-2

1AYAAAYAP1040

(4) Part No. K7311-6554-2

1AYAAAYAP152A

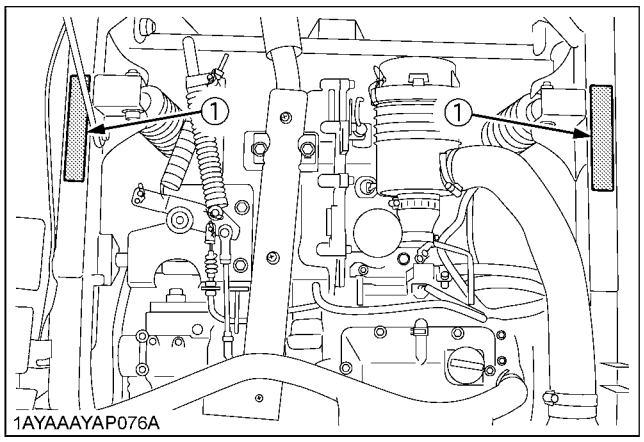

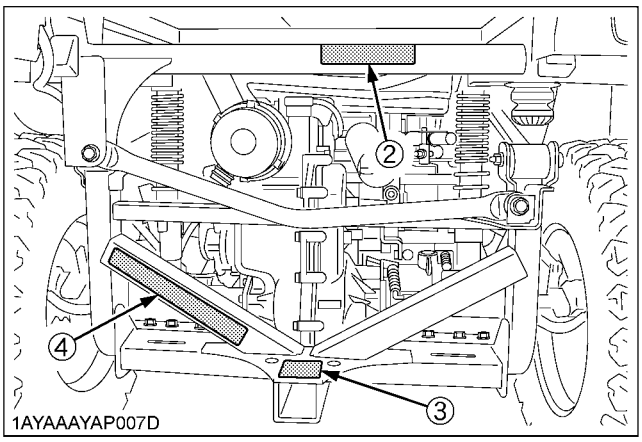

1AYAAAYAP153A

8. CARE OF DANGER, WARNING AND CAUTION LABELS

1. Keep danger, warning and caution labels clean and free from obstructing material.
2. Clean danger, warning and caution labels with soap and water, dry with a soft cloth.
3. Replace damaged or missing danger, warning and caution labels with new labels from your local KUBOTA Dealer.
4. If a component with danger, warning and caution label(s) affixed is replaced with new part, make sure new label(s) is(are) attached in the same location(s) as the replaced component.
5. Mount new danger, warning and caution labels by applying on a clean dry surface and pressing any bubbles to outside edge.

SERVICING OF VEHICLE

Your dealer is interested in your new vehicle and has the desire to help you get the most value from it. After reading this manual thoroughly, you will find that you can do some of the regular maintenance by yourself.
However, when in need of parts or major service, be sure to see your KUBOTA Dealer.
For service, contact the KUBOTA Dealership from which you purchased your vehicle or your local KUBOTA Dealer.
When in need of parts, be prepared to give your dealer vehicle, engine, transmission and ROPS serial numbers.
Locate the serial numbers now and record them in the space provided.

	Type	Serial No.
Vehicle		
Engine		
Transmission		
ROPS		
Product Identification Number		
Date of Purchase		
Name of Dealer (To be filled in by purchaser)		

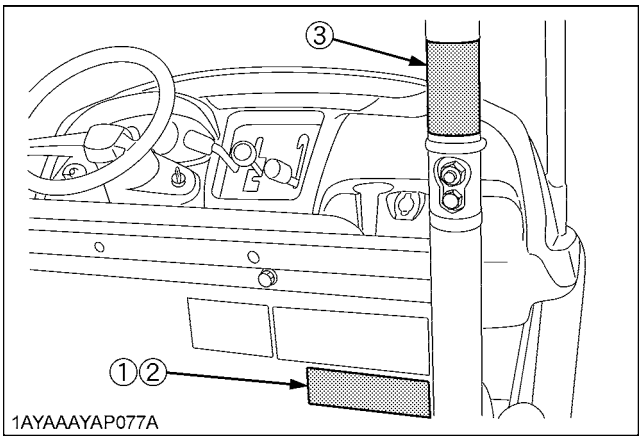

(1) Vehicle serial number
(2) Vehicle identification number
(3) ROPS serial number

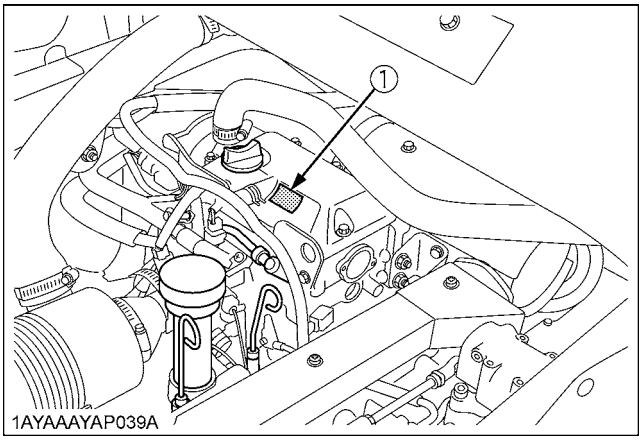

(1) Engine serial number

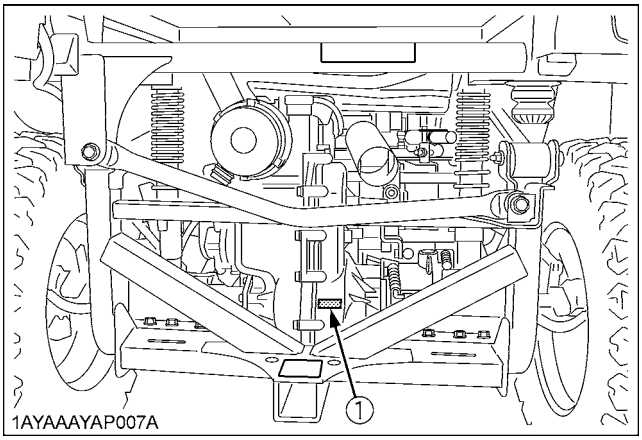

(1) Transmission assy serial number

SPECIFICATIONS

SPECIFICATION TABLE

Model				RTV500
Engine	Make			KUBOTA GZ460F-E3-UV
	Type			2 cylinders, 4-cycle, Gasoline, OHV
	Displacement		L (cu. in.)	0.456 (27.8)
	Horsepower		kW (HP) / rpm	11.8 (15.8) / 3600
Fuel Capacity			L (U.S.gals)	20 (5.3)
Transmission				Continuously variable hydro transmission (VHT)
Wheels, Drive system				4, Rear 2WD or 4WD
Differential lock				Standard; hand operated with mechanical holder
Gear selection				Hi-Lo range forward, neutral, reverse
Brakes	Front / Rear			Dry disk brake
	Parking brake			Rear wheel, hand lever
Steering				Rack & Pinion
Suspension	Front			Independent, MacPherson strut-type
	Rear			Semi-independent, Multi-link
Dimensions	Length		mm (in.)	2690 (105.9)
	Width		mm (in.)	1390 (54.7)
	Height, overall		mm (in.)	1829 (72)
	Front tread centers		mm (in.)	1016 (40)
	Rear tread centers		mm (in.)	1041 (41)
	Wheelbase		mm (in.)	1800 (70.9)
	Ground clearance	front axle	mm (in.)	205 (8.1)
		rear axle		175 (6.9)
	Turning diameter		m (ft)	7 (22.9)
Max. rolling weight (Towing Capacity)			kg (lbs.)	Rear: 500 (1102) / Front: 250 (551)
Payload capacity			kg (lbs.)	430 (949)
Weight			kg (lbs.)	615 (1358) with ATV Tires / 620 (1369) with HDWS Tires

Model			RTV500	
Cargo bed	Width	mm (in.)	1032 (40.6)	
	Length	mm (in.)	856 (33.7)	
	Depth	mm (in.)	290 (11.4)	
	Volume	m^3 (cu.ft.)	0.25 (9)	
	Bed height (unloaded)	mm (in.)	810 (31.9)	
	Max. cargo bed load	kg (lbs.)	200 (441)	
Sound level, operator ear		dB (A)	83	
Tires	Front		24x9-12 HDWS, 6PLY	24x9-12 ATV, 6PLY
	Rear		24x11-12 HDWS, 6PLY	24x11-12 ATV, 6PLY
Front deluxe guard			Opt.	
Body color			Orange / Camo	
Speedometer			Opt.	
Rear net			Opt.	

NOTE :
- The company reserves the right to change the specifications without notice.
- The values in "Ground clearance" and "Weight" are those of the machine equipped with the tires in the table above.

TRAVELING SPEEDS

Model	RTV500
Range gear shift lever	km/h (mph)
Low	16 (10)
High	40 (25)
Reverse	23 (14.3)

VEHICLE LIMITATIONS

The KUBOTA Vehicle has been thoroughly tested for proper performance with implements sold or approved by KUBOTA. Use with implements which are not sold or approved by KUBOTA and which exceed the maximum specifications listed below, or which are otherwise unfit for use with the KUBOTA Vehicle may result in malfunctions or failures of the vehicle, damage to other property and injury to the operator or others. [Any malfunctions or failures of the vehicle resulting from use with improper implements are not covered by the warranty]

Max. Cargo loading weight (W1)	Rear trailer hitch	Front trailer hitch
Max. Cargo load should not exceed "200 kg (441 lbs.)" or "CL". CL = 453 kg (1000 lbs.) - (operator + passenger + opt. + acc. + cabin) weight CL: Cargo Load opt.: option acc.: accessory	Max. rolling weight (W2) 500 kg (1102 lbs.)	Max. rolling weight (W4) 250 kg (551 lbs.)
	Max. tongue weight (W3) 50 kg (110 lbs.)	Max. tongue weight (W5) 50 kg (110 lbs.)

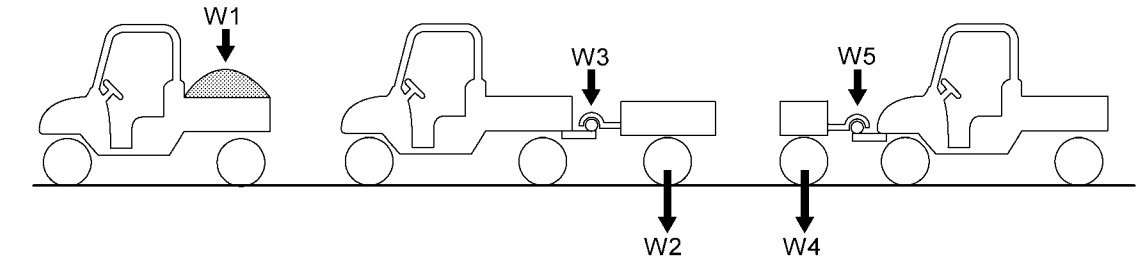

1AYAAAAAP092A

Rolling weight: Trailer weight + Cargo Load

- Above mentioned specifications are based on level ground condition.

INSTRUMENT PANEL AND CONTROLS

LOCATION OF PARTS

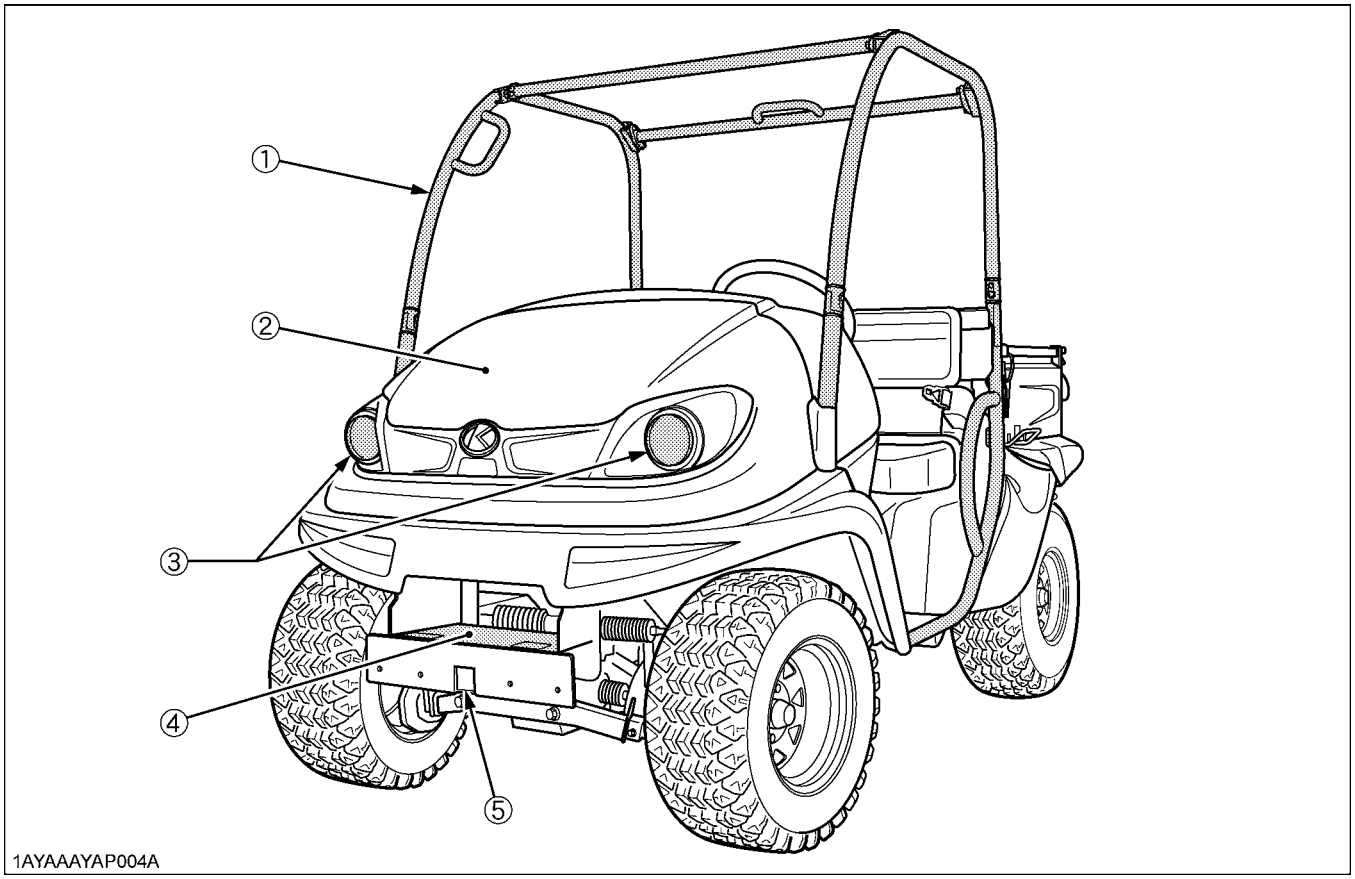

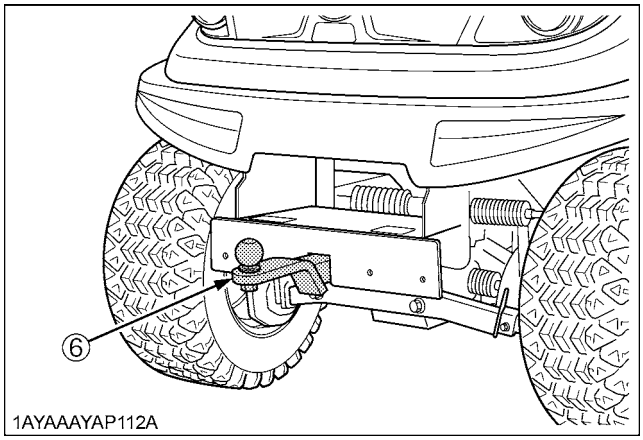

ILLUSTRATED CONTENTS

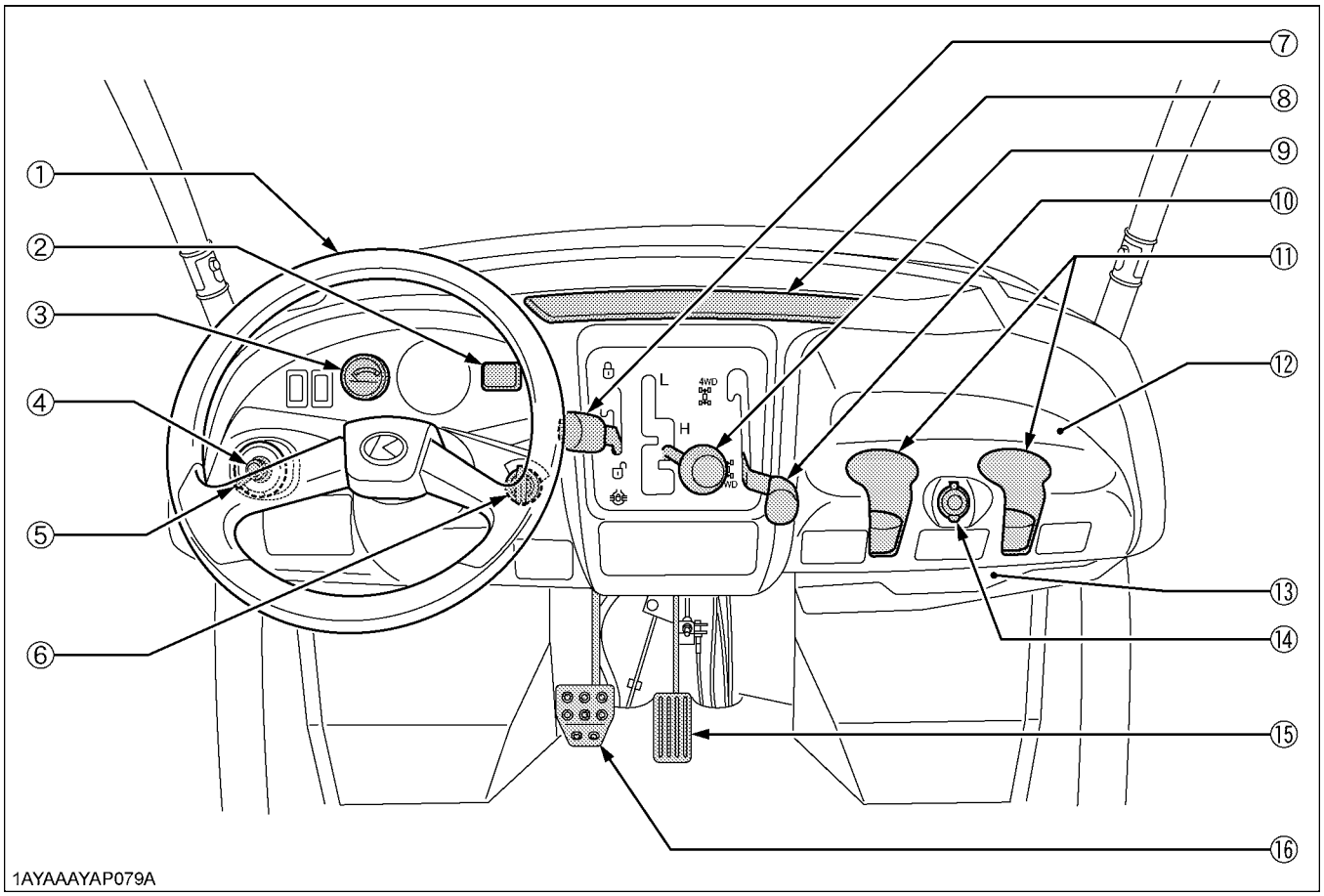

ILLUSTRATED CONTENTS

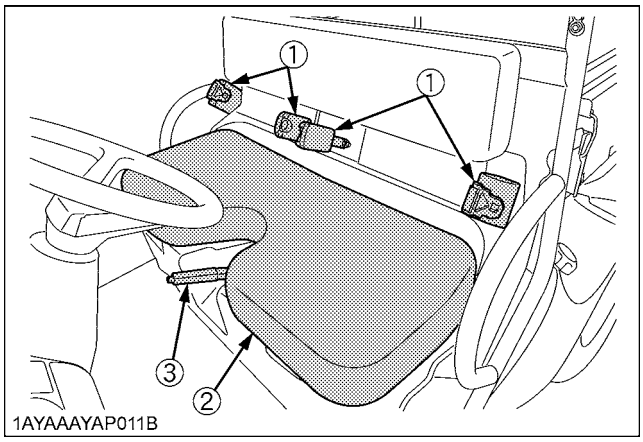

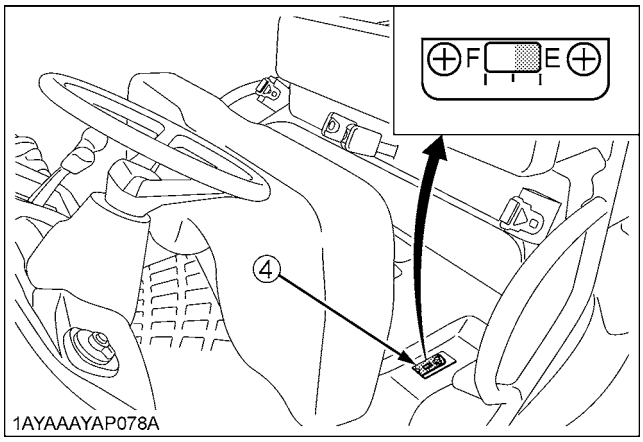

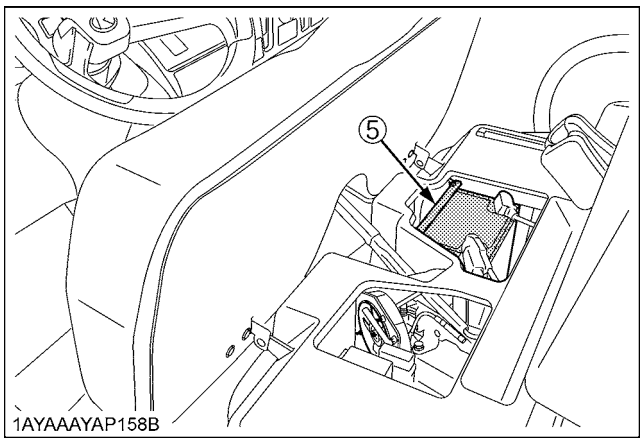

ILLUSTRATED CONTENTS

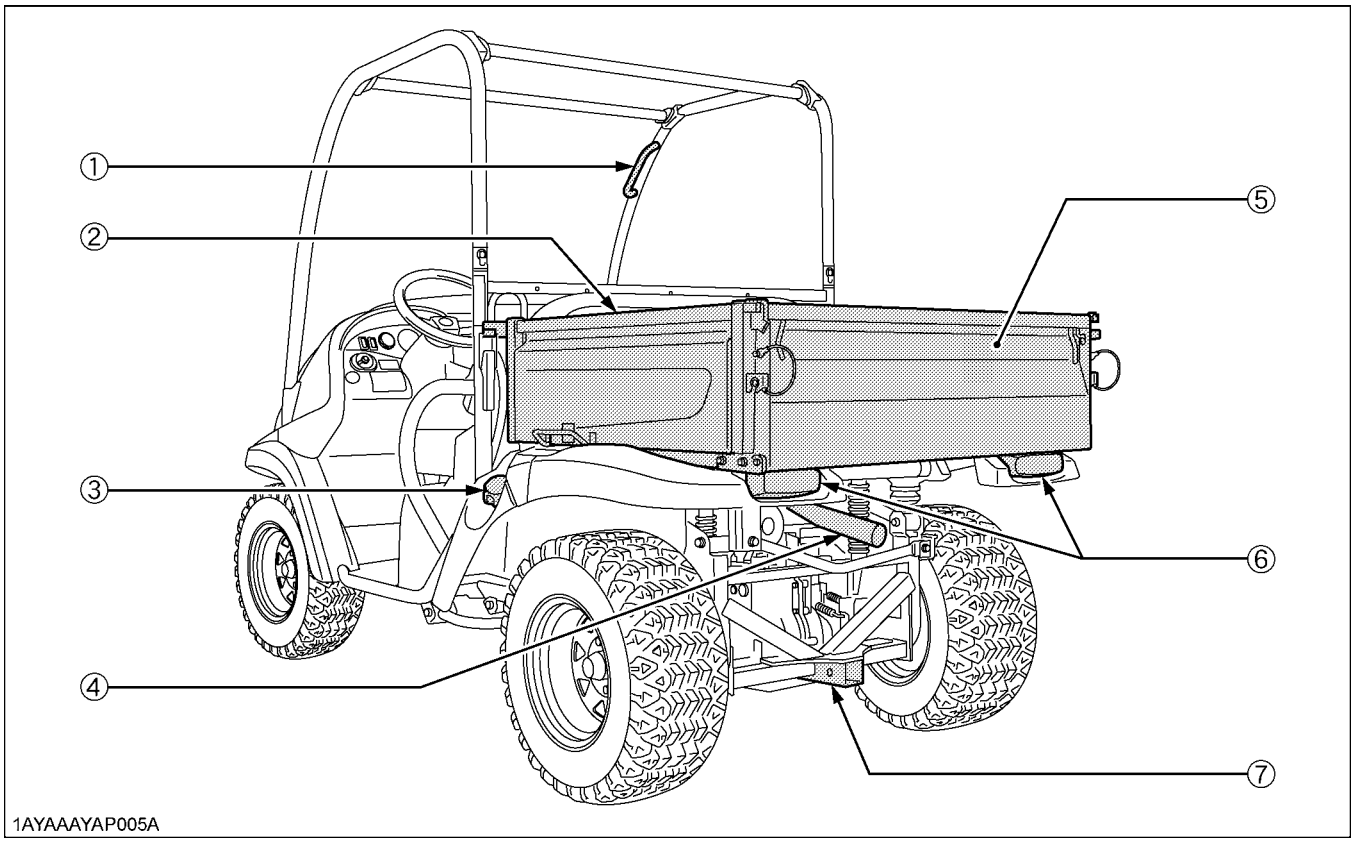

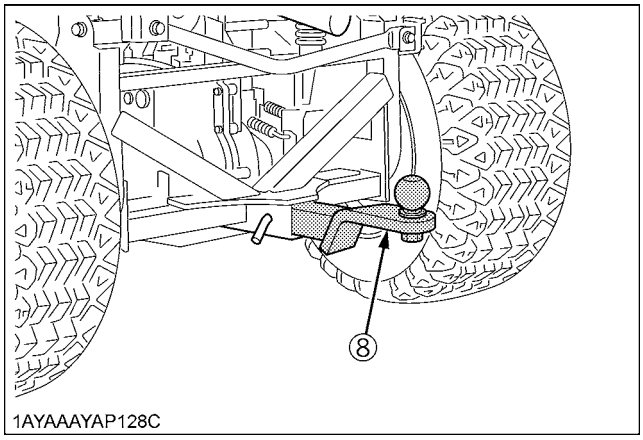

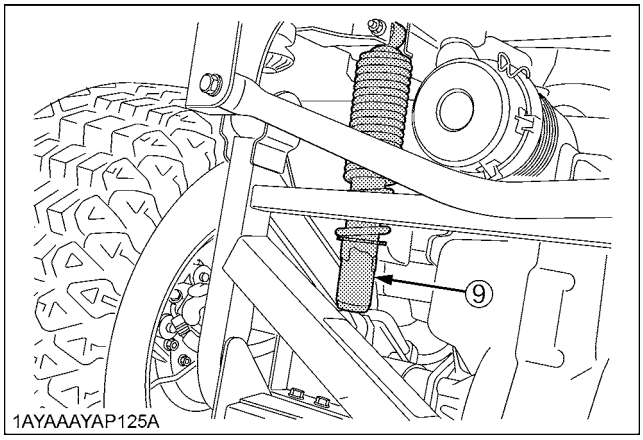

ILLUSTRATED CONTENTS

ILLUSTRATED CONTENTS

PRE-OPERATION CHECK

DAILY CHECK

To prevent trouble from occurring, it is important to know the condition of the vehicle well. Check it before starting.

CAUTION

To avoid personal injury:

- **Be sure to check and service the vehicle on a level surface with the engine shut off and the parking brake "ON" and implement lowered to the ground if equipped.**

Check item

- Walk around inspection
- Check engine oil level
- Check transmission fluid level
- Check brake fluid level
- Check engine cooling fan
  [For those of the engine serial number 8U0086 or later, check the fan operation.]
- Check coolant level
- Clean radiator screen
  (When used in a dusty place)
- Check brake
- Check parking brake
- Check indicators, gauges and meters
- Check lights
- Check seat belt and ROPS
- Check front and drive joint boots
- Check tire inflation pressure
- Refuel
  (See "DAILY CHECK" in "PERIODIC SERVICE" section.)
- Care of danger, warning and caution labels
  (See "DANGER, WARNING AND CAUTION LABELS" in "SAFE OPERATION" section.)

OPERATING THE ENGINE

CAUTION

To avoid personal injury:

- **Read "SAFE OPERATION" in the front of this manual.**
- **Read the danger, warning and caution labels located on the vehicle.**
- **To avoid the danger of exhaust fume poisoning, do not operate the engine in a closed building without proper ventilation.**
- **Never start engine while standing on ground. Start engine only at the operator's seat.**
- **Make it a rule to set the range gear shift lever to the "NEUTRAL" position.**

IMPORTANT :

- Do not use starting fluid to aid engine starting.
- To protect the battery and the starter, make sure that the starter is not continuously turned for more than 10 seconds.
  If the engine dose not start, allow 60-second cool down period between start attempts.

STARTING THE ENGINE

1. Make sure the parking brake is applied.

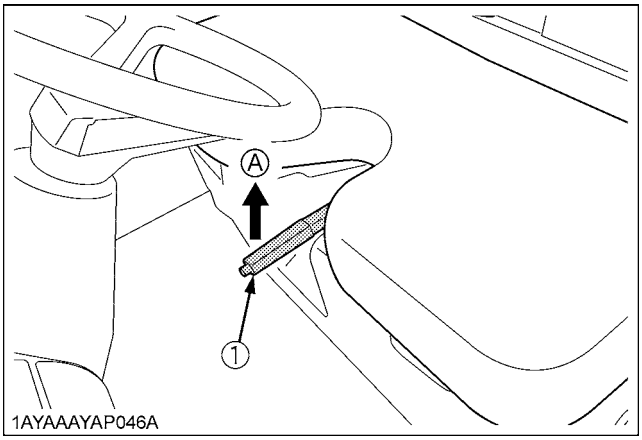

(1) Parking brake lever *(A) Pull to "PARK"*

NOTE :

- The brake indicator light comes on while parking brake is applied and goes off when it is released.

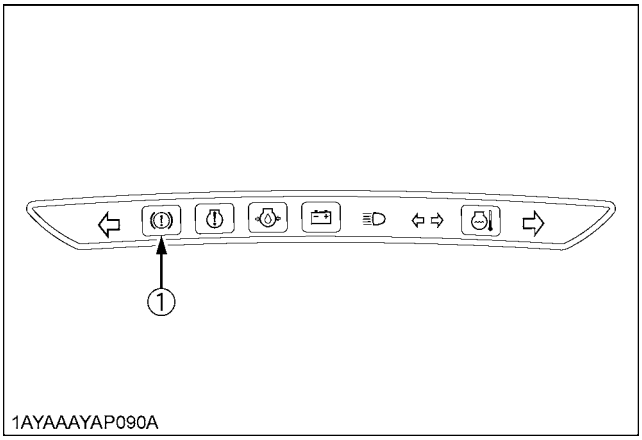

(1) Brake indicator light

2. Set the range gear shift lever to the "NEUTRAL" position.

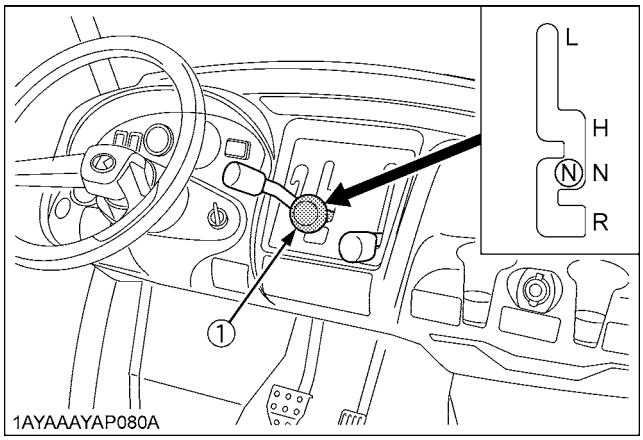

(1) Range gear shift lever

(L) LOW Range
(H) HIGH Range
(N) "NEUTRAL" POSITION
(R) "REVERSE"

3. Insert the key into the key switch and turn it "ON".

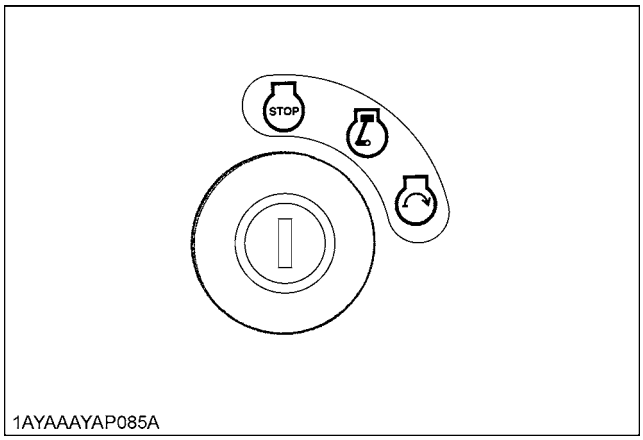

( ) "OFF" (Engine-Stop)
( ) "ON" (Engine-Run)
( ) "START" (Engine-Start)

◆ **Check Easy Checker(TM) Lamps:**

1. When the key is turned "ON", lamps(2)(3)(4) should come on. If trouble should occur at any location while the engine is running, the warning lamp corresponding to that location comes on.
2. The brake indicator light(1) comes on.
   (1) While brake is applied and goes off when it is released.
   (2) When the brake fluid is below the "MIN" mark. (Add the brake fluid to the "MAX" mark.)
   (See "Checking Brake Fluid Level" in "DAILY CHECK" in "PERIODIC SERVICE" section.)

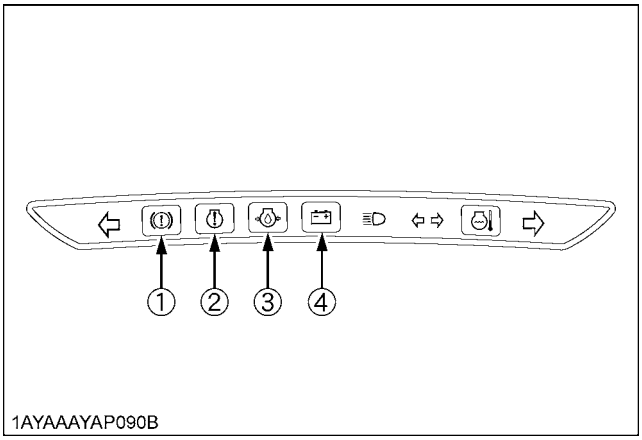

(1) Brake indicator light
(2) Engine diagnostic light
(3) Engine oil pressure light
(4) Electrical charge light

IMPORTANT :

- Daily checks with the Easy Checker(TM) only, are not sufficient. Never fail to conduct daily checks carefully by referring to "DAILY CHECK" in "PERIODIC SERVICE" section.

NOTE :

- For further details of Easy Checker(TM), see "Easy Checker(TM)" in "CHECK DURING DRIVING" in "OPERATING THE VEHICLE" section.

4. Turn the key to the "START" position and release when the engine starts.

IMPORTANT :

- As safety function, the engine will not start unless the range gear shift lever is in the "NEUTRAL" position.

■Cold Weather Starting

When the ambient temperature is below 0℃(32℉), the engine is very cold. If the engine fails to start after 10 seconds, turn off the key for 30 seconds. Then repeat steps 3 and 4. To protect the battery and the starter, make sure that the starter is not continuously turned for more than 10 seconds.

STOPPING THE ENGINE

1. After slowing the engine to idle, turn the key to "OFF".
2. Remove the key.

WARMING UP

CAUTION

To avoid personal injury:

- **Be sure to set the parking brake during warm-up.**
- **Be sure to set the range shift lever to the "NEUTRAL" position.**

For 5 minutes after engine start-up, allow the engine to warm up without applying any load. This is to allow oil to reach every engine part. If load should be applied to the engine without this warm-up period, trouble such as seizure, breakage or premature wear may develop.

■Warm-Up Transmission Oil in the Low Temperature Range

Hydraulic oil serves as transmission fluid. In cold weather, the oil may be cold with increased viscosity. This can cause delayed oil circulation or abnormally low hydraulic pressure for some time after engine start-up. This in turn can result in trouble in the hydraulic system.
To prevent the above, observe the following instructions:
Warm up the engine at about 50% of rated rpm according to the table below:

Ambient temperature	Warm-up time requirement
Above 0℃ (32℉)	Approx. 5 minutes
-10 to 0℃ (14 to 32℉)	5 to 10 minutes
-20 to -10℃ (-4 to 14℉)	10 to 15 minutes
Below -20℃ (-4℉)	More than 15 minutes

IMPORTANT :

- Do not operate the vehicle under full load condition until it is sufficiently warmed up.

JUMP STARTING

CAUTION

To avoid personal injury:

- **Battery gases can explode. Keep cigarettes, sparks, and flames away from battery.**
- **If vehicle battery is frozen, do not jump start engine.**
- **Do not connect other end of negative jumper cable to negative terminal of vehicle battery.**
- **The parts such as the muffler may be hot. Be careful not to get burned in connecting jumper cables.**

When jump starting engine, follow the instructions below to safely start the engine.

1. Bring helper vehicle with a battery of the same voltage as disabled vehicle within easy cable reach. "THE VEHICLES MUST NOT TOUCH".
2. Engage the parking brake of both vehicles and put the shift lever in neutral. Shut the engine off.
3. Put on safety goggles and rubber gloves.
4. Ensure the vent caps are securely in place. (if equipped)
5. Cover vent holes with damp rags. Do not allow the rag to touch the battery terminals.
6. Attach the red clamp to the positive (red, (+) or pos.) terminal of the dead battery and clamp the other end of the same cable to the positive (red, (+) or pos.) terminal of the helper battery.
7. Clamp the other cable to the negative (black, (-) or neg.) terminal of the helper battery.
8. Clamp the other end to the engine block or frame of the disabled vehicle as far from the dead battery as possible.
9. Start the helper vehicle and let its engine run for a few moments. Start the disabled vehicle.
10. Disconnect the jumper cables in the exact reverse order of attachment. (Steps 8, 7 and 6).
11. Remove and discard the damp rags.

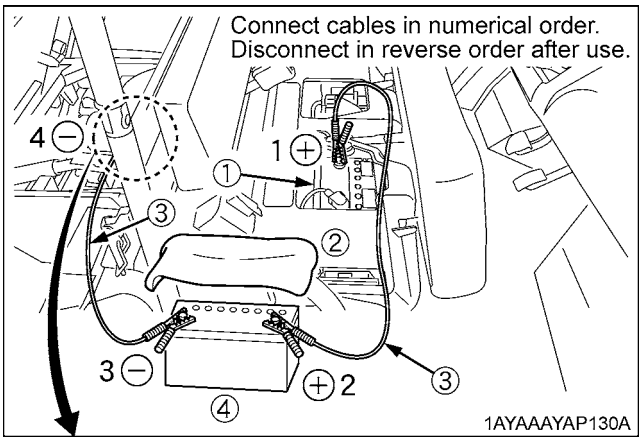

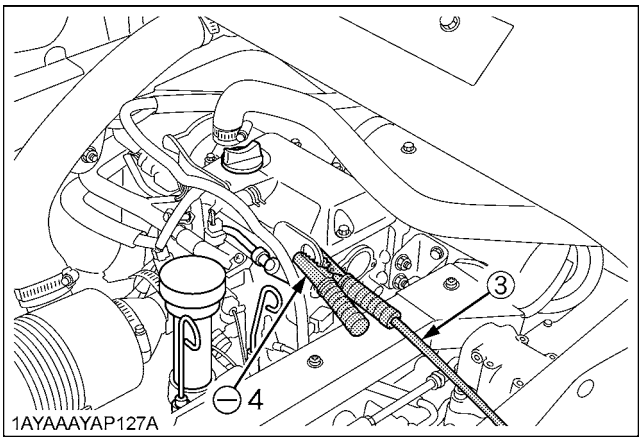

(1) Dead battery
(2) Lay a damp rag over the vent caps
(3) Jumper cables
(4) Helper battery

IMPORTANT :

- This vehicle has a 12 volt negative (-) ground starting system.
- Use only same voltage for jump starting.
- Use of a higher voltage source could result in severe damage to vehicle's electrical system.
  Use only matching voltage source when "Jump starting" a low or dead battery.

OPERATING THE VEHICLE

OPERATING NEW VEHICLE

How a new vehicle is handled and maintained determines the life of the vehicle.

A new vehicle just off the factory production line has been, of course, tested, but the various parts are not accustomed to each other, so care should be taken to operate the vehicle for the first 50 hours at a slower speed and avoid excessive work or operation until the various parts become "broken-in." The manner in which the vehicle is handled during the "breaking-in" period greatly affects the life of your vehicle. Therefore, to obtain the maximum performance and the longest life of the vehicle, it is very important to properly break-in your vehicle. In handling a new vehicle, the following precautions should be observed.

■Do not Operate the Vehicle at Full Speed for the First 50 Hours

- Do not start quickly nor apply the brakes suddenly.
- In winter, operate the vehicle after fully warming up the engine.
- Do not run the engine at speeds faster than necessary.
- On rough roads, slow down to suitable speeds.
  Do not operate the vehicle at fast speed. The above precautions are not limited only to new vehicles, but to all vehicles. But it should be especially observed in the case of new vehicles.

■Changing Lubricating Oil for New Vehicles

The lubricating oil is especially important in the case of a new vehicle. The various parts are not "broken-in" and are not accustomed to each other. Small pieces of metal grit may develop during the operation of the vehicle; and this may wear out or damage the parts. Therefore, care should be taken to change the lubricating oil a little earlier than would ordinarily be required. For further details of change interval hours, see "MAINTENANCE" section.

STARTING

1. Fasten the seat belt.

■Seat Belt

WARNING

To avoid personal injury:

- **Seat belts reduce injury. Always wear your seat belts. The lap-style seat belts may not provide adequate protection for small children. Special care is recommended when carrying a child passenger.**

CAUTION

To avoid personal injury:

- **Always use the seat belts when operating and riding in the vehicle.**

Adjust the seat belts for proper fit and connect the buckle. This seat belt is an auto-locking retractable type.

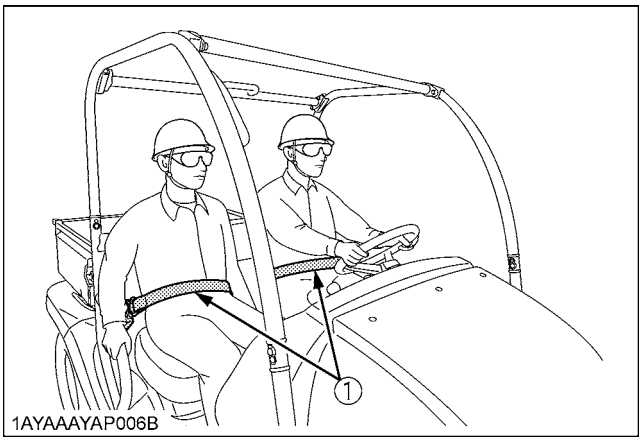

(1) Seat belt

2. Selecting light switch position.

■Head Light Switch

The head light switch is operative when the key switch is in the "ON" position.
Turn on the key switch and turn the head light switch to the "ON" position.
Turn the head light switch to the "OFF" position to turn off the head light.

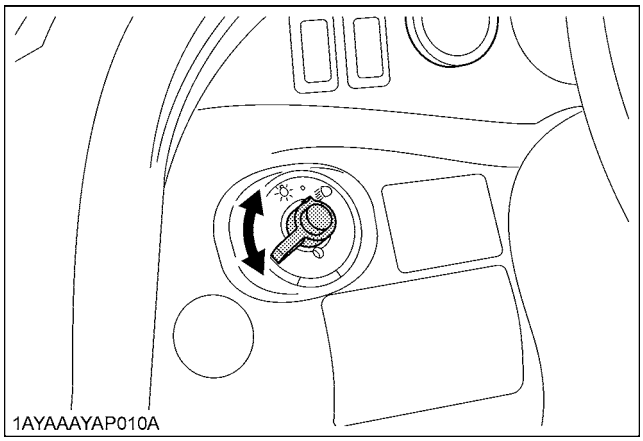

(1) Head light switch

Head lights "ON"
Head lights "OFF"

NOTE :

- Turning the head light switch to the "ON" position causes the following lamps to light simultaneously.
  (1) Tail lights (lamps at the rear portions of the vehicle)
  (2) Lamp built in the coolant temperature gauge

■Horn Button

The horn switch is operative when the key switch is in either the "ON" or "OFF" position.
The horn will sound when the horn button is pressed.

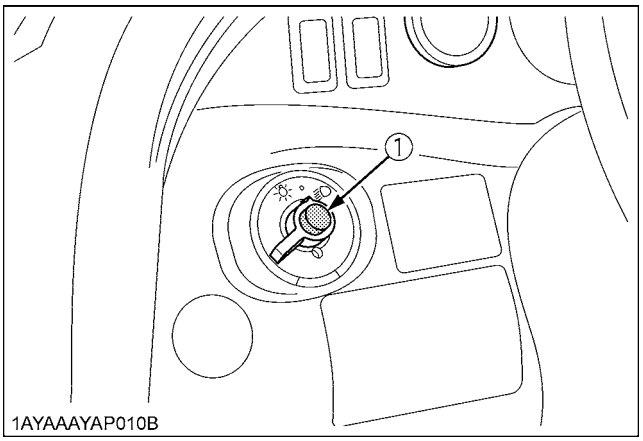

(1) Horn button

3. Checking the brake pedal.

■Brake Pedal

CAUTION

To avoid personal injury:

- **If the operator suddenly brakes, an accident may occur due to loss of control or the shifting forward of heavy loads.**
- **When driving on icy, wet or loose surface, make sure the vehicle is correctly ballasted to avoid skidding and loss of steering control. Operate at reduced speed.**

The brake pedal is the left pedal on the foot board. Depress the pedal to slow or stop the vehicle.

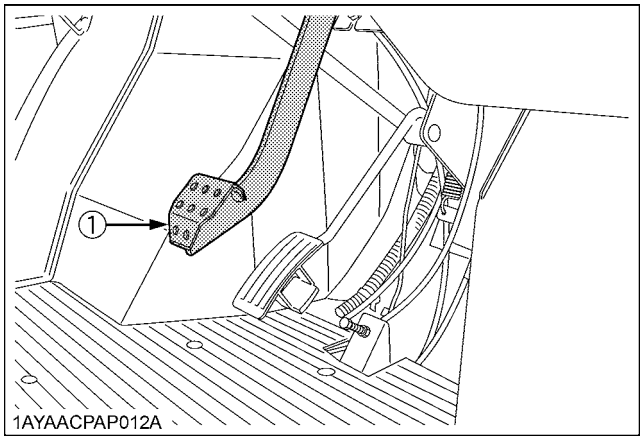

(1) Brake pedal

4. Selecting the travel speed.

■Range Gear Shift Lever

CAUTION

To avoid personal injury:

- **Avoid changing range gear shift lever when ascending or descending a slope.**
- **Before ascending or descending a slope, shift to the "L" range to control the vehicle speed.**
- **If you shift gears while ascending or descending a slope, be prepared to use the brake to maintain control.**
- **Operate in reverse at slow speeds to maintain control.**

1. The range gear shift lever can only be shifted when vehicle is completely stopped and the speed control pedal is in the "NEUTRAL" position.
2. To avoid transmission and shift linkage damage, completely stop the vehicle using the brake pedal before shifting gears.
3. Select proper gear and engine speed depending on the type of job.
4. Before dismounting vehicle, shift the range gear shift lever to the "NEUTRAL" position and apply parking brake.

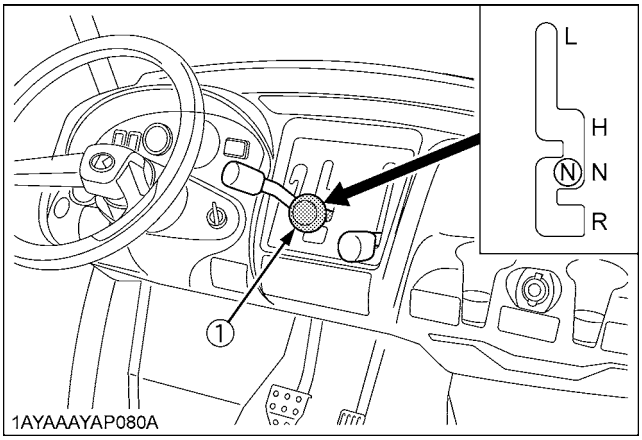

(1) Range gear shift lever

(L) LOW Range
(H) HIGH Range
(N) "NEUTRAL" POSITION
(R) "REVERSE"

NOTE :
- Do not force the range gear shift lever. If it is difficult to shift the lever into "L", or "H" on slopes, be sure to apply the parking brake before starting the procedure.
  (1) Slightly depress the speed control pedal to rotate the gears inside of transmission.
  (2) Release the speed control pedal to the "NEUTRAL" position.
- An accident may occur with erratic shifting operation.
- Improper range gear shift lever position will cause the vehicle to momentarily coast on slopes.

■4WD Lever

CAUTION

To avoid personal injury:
- **Do not engage the front wheel drive when traveling at road speed.**
- **When driving on icy, wet or loose surfaces, make sure the vehicle is correctly ballasted to avoid skidding and loss of steering control. Operate at reduced speed and engage front wheel drive.**
- **An accident may occur if the vehicle is suddenly braked, such as by heavy towed loads shifting forward causing loss of control.**
- **The braking characteristics are different between two and four wheel drive. Be aware of the difference and use carefully.**

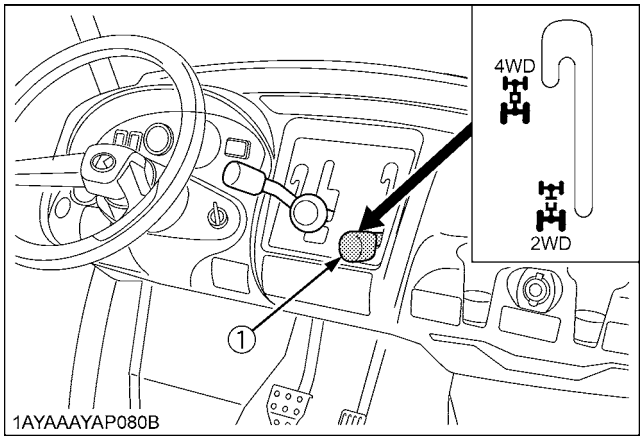

(1) 4WD lever *"4WD"* *"2WD"*

IMPORTANT :
- Use the lever to engage the front wheels with the vehicle stopped. Shift the lever to "4WD" to engage the front wheel drive.
- Tires will wear quickly if front wheel drive is engaged on paved roads.
- If the 4WD lever is difficult to shift to "2WD", stop the vehicle, turn the steering wheel in both directions and then move the lever.

◆ **Front wheel drive is effective for the following jobs:**
1. When greater pulling force is needed, such as working in a wet field, when pulling a trailer, or when working with a front-end blade.
2. When working in sandy soil.

5. Unlock the parking brake and start slowly.

■Parking Brake Lever

To release the parking brake, depress the brake pedal, push release button and push down parking brake lever. Make sure that indicator in the Easy Checker(TM) goes off.

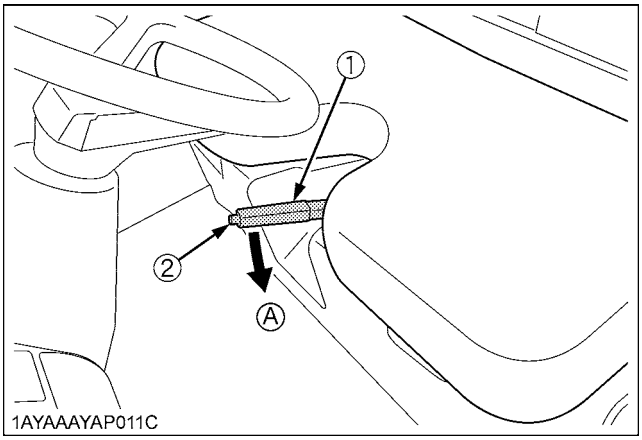

(1) Parking brake lever *(A) "RELEASE"*
(2) Release button

■Speed Control Pedal

Use the speed control pedal when traveling. Push down on it for higher speed.

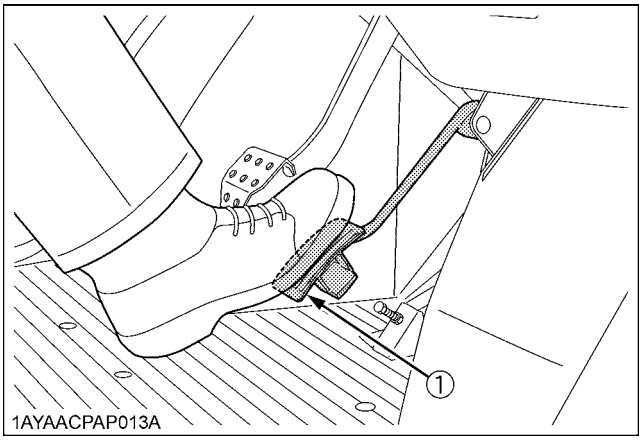

(1) Speed control pedal

STOPPING

■Stopping

1. Release the speed control pedal.
2. Step on the brake pedal.
3. After the vehicle has stopped, put the range gear shift lever in neutral, and apply the parking brake.

CHECK DURING DRIVING

■Immediately Stop the Engine if:

- The engine suddenly slows down or accelerates,
- Unusual noises are suddenly heard,
- Exhaust fumes suddenly become very dark,

While driving, check the following items to see that all the parts are functioning normally.

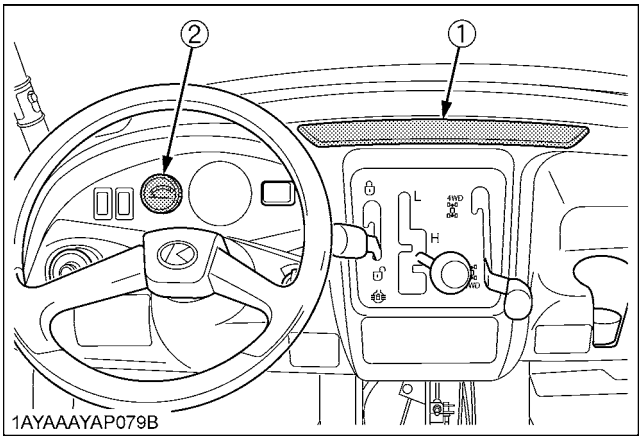

(1) Easy Checker(TM)
(2) Coolant temperature gauge

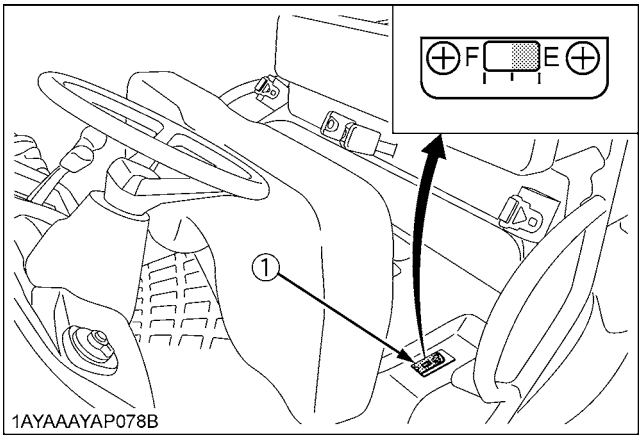

(1) Fuel gauge

■Easy Checker(TM)

If the warning lamps in the Easy Checker(TM) come on during operation, immediately stop the engine, and find the cause as shown below.
Never operate the vehicle with an Easy Checker(TM) lamp on.

(⚠) Brake indication light
The warning lamp in the Easy Checker(TM) comes on if the parking brake is applied.
If the lamp is on during operation, release the parking brake lever immediately.
If the brake fluid goes below the prescribed level, the warning lamp in the Easy Checker(TM) will come on.
If this should happen during operation, check to see that there is no oil leak in the brake system, and then add oil.
(See "Checking Brake Fluid Level" in "DAILY CHECK" in "PERIODIC SERVICE" section.)

Engine diagnostic light
If sensors malfunction, the Easy Checker(TM) will come on. If the light is active, stop the vehicle and shut off the engine. If the light is active after restart, consult your local KUBOTA Dealer.

Engine oil pressure light
If the oil pressure in the engine goes below the prescribed level, the warning lamp in the Easy Checker(TM) will come on.
If this should happen during operation, and it does not go off when the engine is accelerated, check the level of engine oil.
(See "Checking Engine Oil Level" in "DAILY CHECK" in "PERIODIC SERVICE" section.)

Electrical charge light
If the alternator is not charging the battery, the Easy Checker(TM) will come on.
If this should happen during operation, check the electrical charging system or consult your local KUBOTA Dealer.

■Fuel Gauge

The fuel gauge indicates the fuel level.
Be careful not to empty the fuel tank. Otherwise air may enter the fuel system.

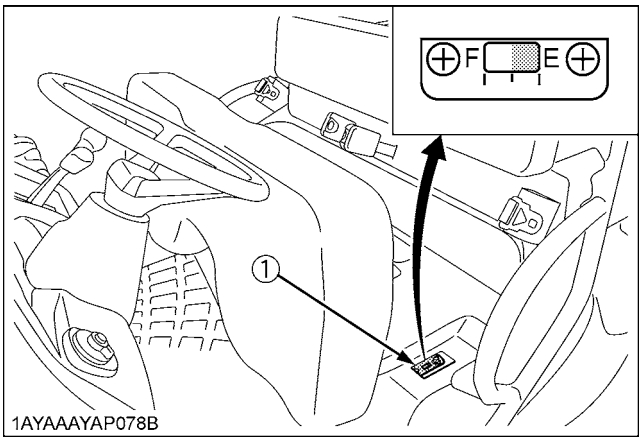

(1) Fuel gauge
(F) "FULL"
(E) "EMPTY"

IMPORTANT :
- Do not refuel over "F". Fill the tank only to the bottom of the filler neck in the fuel tank.

■Coolant Temperature Gauge

CAUTION

To avoid personal injury:

- **Do not remove radiator cap until coolant temperature is well below its boiling point. Then loosen cap slightly to the stop to relieve any pressure before removing cap completely.**

1. With the key switch "ON" the temperature gauge indicates the temperature of the coolant. White Zone for "COLD" and Red zone for "HOT".
2. If the indicator reaches the Red zone, engine coolant is overheated. Check the vehicle by referring to "TROUBLESHOOTING" section.

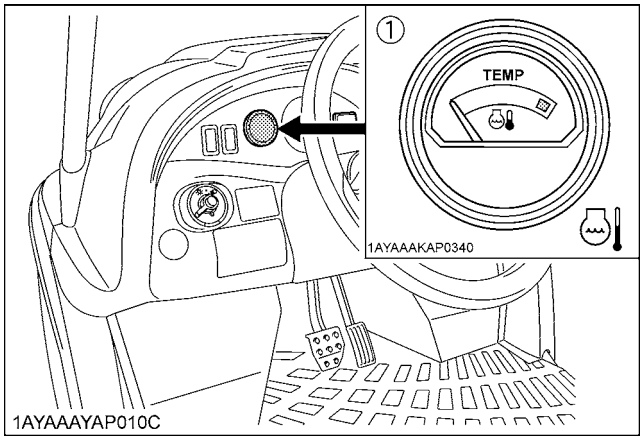

(1) Coolant temperature gauge

■Hourmeter

The hourmeter indicates in 5 digits the hours the vehicle has been used; the last digit indicates 1/10 of an hour.

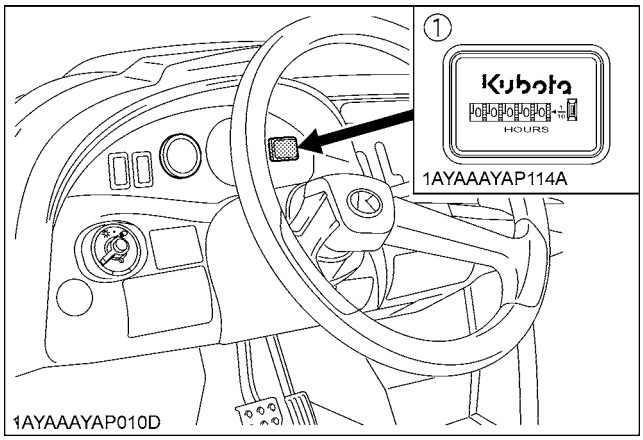

(1) Hourmeter

PARKING

■Parking Brake Lever

CAUTION

To avoid personal injury:
BEFORE DISMOUNTING VEHICLE

- **ALWAYS APPLY THE PARKING BRAKE AND LOWER ALL IMPLEMENTS TO THE GROUND. Leaving transmission in gear with the engine stopped will not prevent from rolling.**
- **STOP THE ENGINE AND REMOVE THE KEY.**

1. Stop the vehicle on a level surface.
2. To apply the parking brake, depress the brake pedal and pull the parking brake lever to park.
3. To release the parking brake, push the release button and push down the parking brake lever. When the parking brake is released, the brake indicator light in the Easy Checker(TM) goes off.

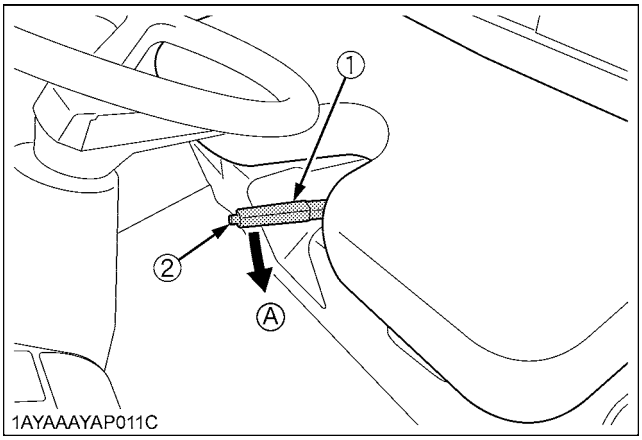

(1) Parking brake lever *(A) "RELEASE"*
(2) Release button

IMPORTANT :

- If the vehicle is operated with the parking brake applied, the parking brake will be damaged.

ACCESSORY

■12V Electric Outlet

The 12 volt receptacle is located on the front-panel. An auxiliary light or other devices may be connected to this connector.

◆ **This outlet is activated when the key switch is in either the "ON" or "OFF" position.**

When the plug is not used, pull it out. Be careful that leaving the plug inserted causes the battery to run out.

◆ **Do not connect a light or other device that draws more than 120 watts to this connector, or the battery may discharge very rapidly or the outlet may fail.**

IMPORTANT :
- Do not use as a cigarette lighter.
- Do not use when wet.

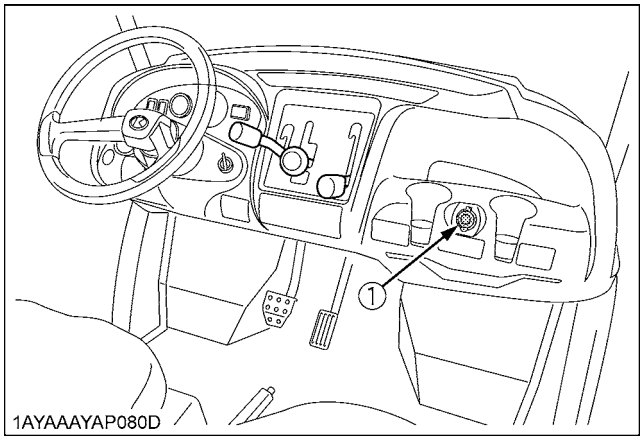

(1) 12V electric outlet

OPERATING TECHNIQUES

■Differential Lock

WARNING

To avoid personal injury due to loss of steering control:
- **Do not operate the vehicle at high speed with differential lock engaged.**
- **Do not attempt to turn with the differential lock engaged.**
- **Be sure to release the differential lock before making a turn in field conditions.**

If one of the rear wheels should slip, shift the differential lock lever to the "ENGAGE" position. Both wheels will then turn together, reducing slippage.
Differential lock is maintained while shifting the differential lock lever to the "ENGAGE" position.

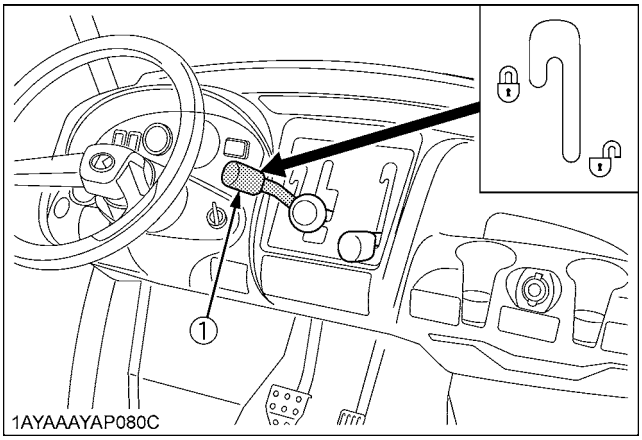

(1) Differential lock lever *"ENGAGE"* *"DISENGAGE"*

IMPORTANT :
- When using the differential lock, always slow the engine down.
- To prevent damage to power train, do not engage differential lock when one wheel is spinning and the other is completely stopped.
- If the differential lock cannot be released, stop the vehicle, turn the steering wheel alternately.

■Unfamiliar Terrain

CAUTION

To avoid personal injury:

- **Be sure to check for hidden obstacles or hazards before driving in a new area.**
- **Keep your speed down until you know the area well.**
- **Use existing trails and stay away from hazardous areas such as steep, rocky slopes or swamps.**
- **Be cautious when visibility is limited, as you may not be able to see obstacles in your path.**

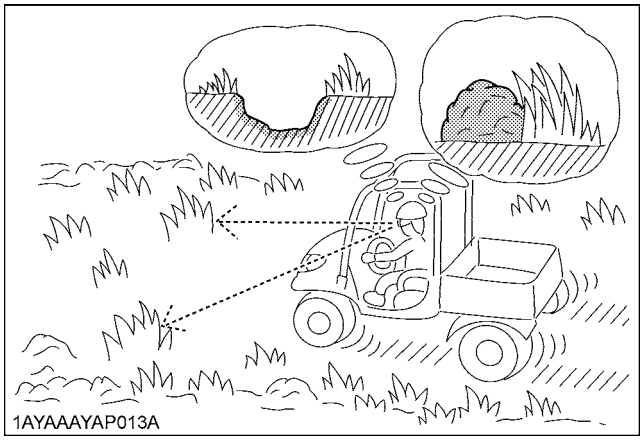

■Driving in Reverse

CAUTION

To avoid personal injury:

- **Turn around, look down and behind you before backing up to be sure there are no obstacles or people in your way.**
- **Depress speed control pedal gradually and back up cautiously.**
- **To stop while driving in reverse take your foot off the speed control pedal and gradually apply the brake.**
- **Do not suddenly engage the brake.**

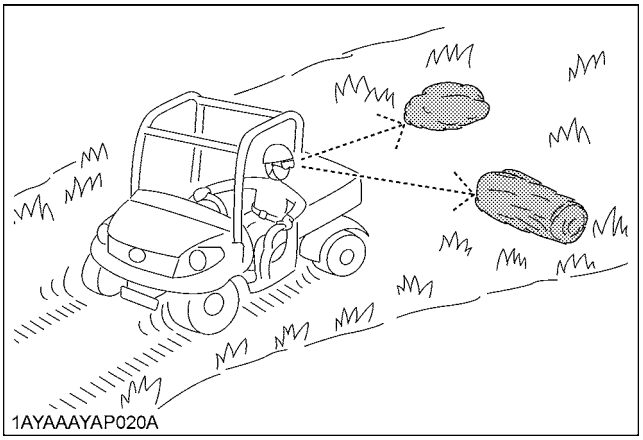

■Driving in "4WD"

CAUTION

To avoid personal injury:

- **Do not drive in "4WD" on paved surfaces.**

For the maximum traction, shift the range gear shift lever into low range and use "4WD" on steep slopes or when stuck in the mud, with differential locked if necessary.

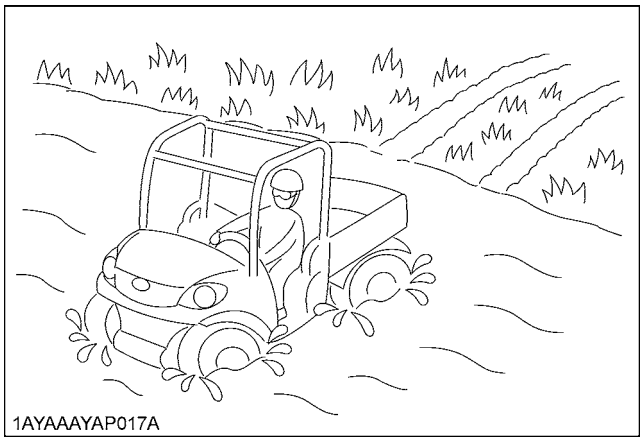

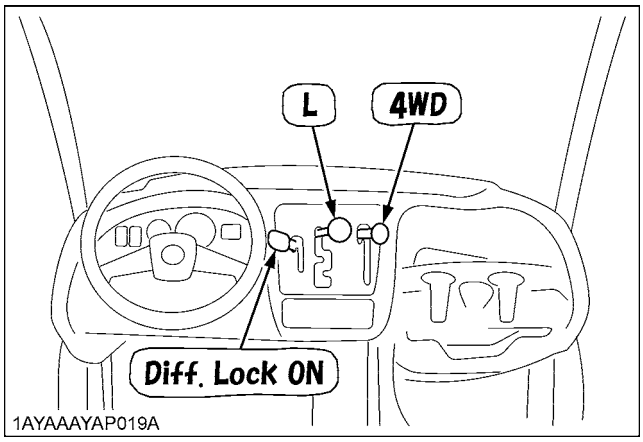

■Turning the Vehicle

WARNING

To avoid personal injury:

- **Reduce vehicle speed before entering the turn and maintain an even speed through the turn.**
- **Do not make sharp turns in order to avoid loss of control or tipping.**

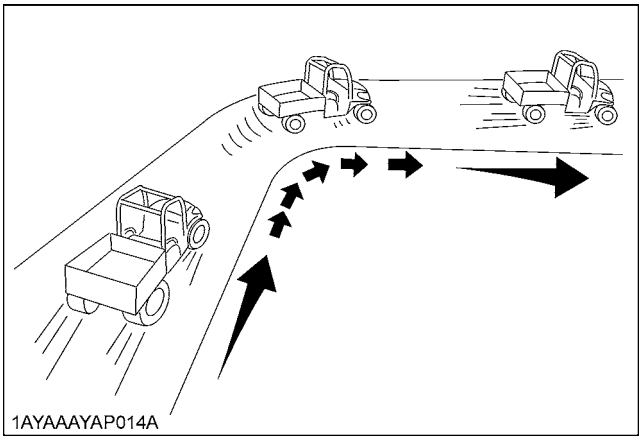

■Hills

WARNING

To avoid personal injury:

- **Do not turn sideways on a hill, or the vehicle may roll over.**
- **Always go straight up hill or down hill.**
- **Slow down until you can get a clean view of the other side at the crest of a hill.**
- **If the engine stalls on a steep slope, roll slowly straight down, using the brake.**
- **Stop and look for obstacles before descending a hill.**

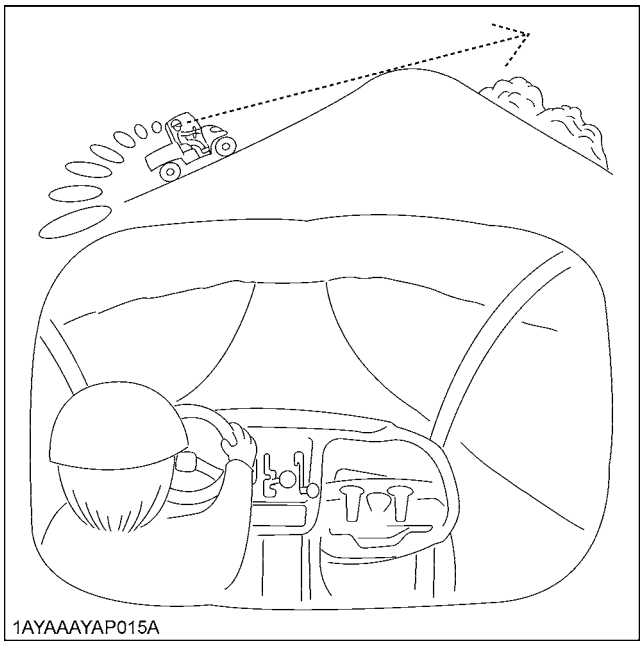
1AYAAAYAP015A

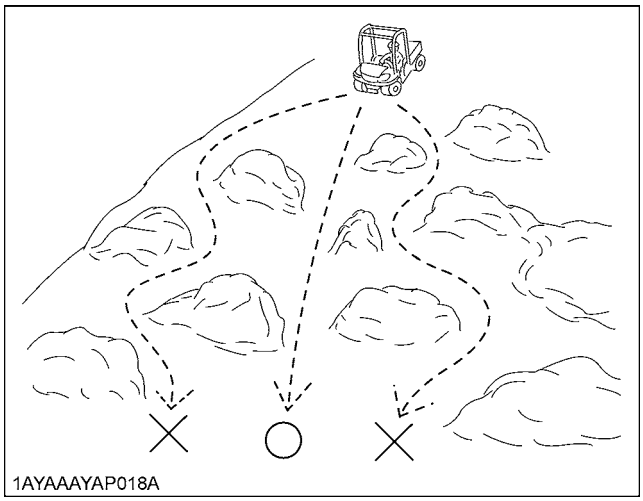
1AYAAAYAP018A

■Traversing Hillsides

WARNING

To avoid personal injury:

- **Reduce vehicles speed to prevent tipping or loss of control.**
- **Do not traverse hillsides that are slippery or covered with rocks or obstacles which may cause you to tip over.**

■Sliding and Skidding

WARNING

To avoid personal injury:

- **Drive slowly and carefully when you are unsure or unprepared for the surface.**
- **Do not apply heavy braking force or accelerate when skidding to prevent loss of control.**
- **Use 4WD and maintain low speeds on areas covered with clay, mud, ice or snow to prevent uncontrolled skidding.**

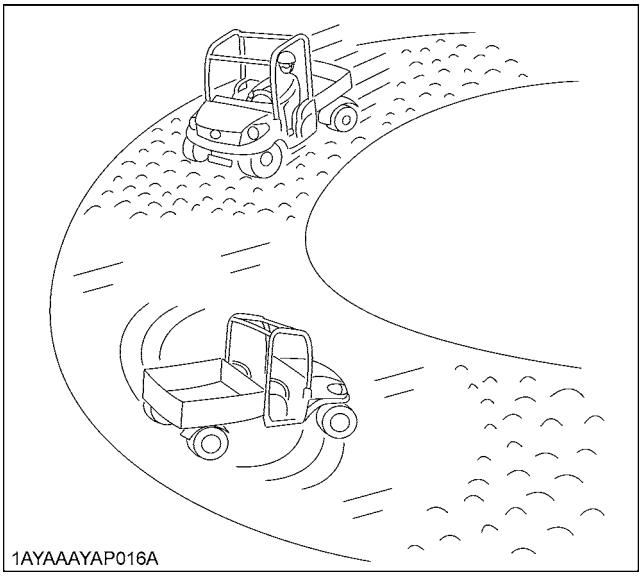
1AYAAAYAP016A

■Driving through Water

WARNING

To avoid personal injury:

- **Do not drive through water whenever it is possible.**
- **Drive slowly across shallow water and choose a location to enter and exit the water where the banks are not too steep or slippery.**
- **Check before entering for rocks, holes or other obstacles that may cause overturn, get stuck or submerged.**
- **Never operate the vehicle in fast flowing water or in excess of 6 inches (152 mm) in depth. Tires may float, making it difficult to maintain control.**
- **Wet brakes may reduce the stopping ability of the vehicle. After operating in water, always apply the brakes to dry them out.**
- **The brake that gets wet may wear out faster. Check for brake wear more frequently if operating in water often.**

IMPORTANT :

- Do not drive through water whenever it is possible. If the alternator drive belt becomes wet, slippage may occur.

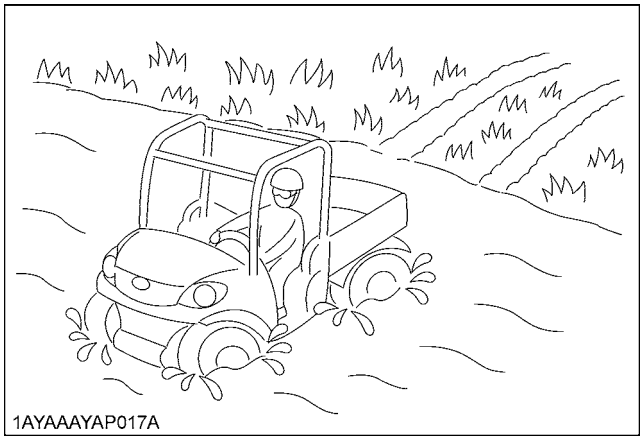

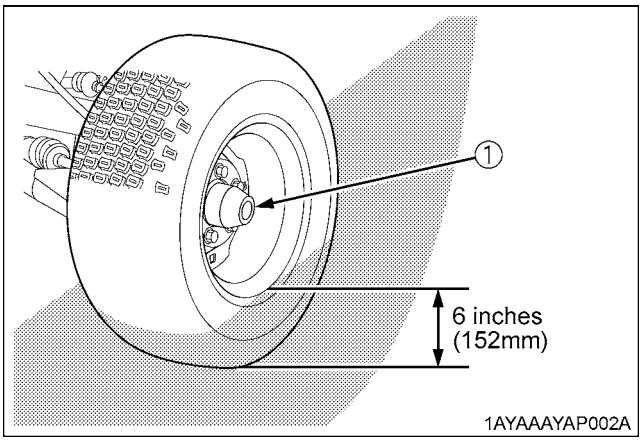

(1) Axle cap

CARGO BED

CARGO BED

■General Caution

WARNING

To avoid personal injury:

- **Never carry passengers in the cargo bed. They can be tossed about or even thrown off causing serious injury or death.**
- **Never raise the cargo bed when it is loaded.**
- **Driving with the cargo bed tilted may be hazardous.**
  Always lower the bed and latch the bed before driving.
- **Be careful not to put any part of your body, such as hands or arms, between the bed and vehicle.**
- **Drive slowly when it is loaded.**

CAUTION

To avoid personal injury:

- **Do not raise the cargo bed while the engine is running above low idle.**

■Max. Cargo Load

	Operator	Passenger	Implement	Max. Cargo Load
ROPS type	95 kg (209 lbs)	---	W: weight	200 kg (441 lbs) - W
	95 kg (209 lbs)	95 kg (209 lbs)	Blade	200 kg (441 lbs) - W
CAB type	95 kg (209 lbs)	---		200 kg (441 lbs) - W
104 kg (229 lbs)	95 kg (209 lbs)	95 kg (209 lbs)	Winch	136 kg (300 lbs) - W

1AYAAAYAP001A

IMPORTANT :

- Maximum Cargo Load (MCL) capacity is 200 kg (441 lbs).
- Never carry loads exceeding the Permissible Cargo Load (PCL).

NOTE :

- Max. Cargo load should not exceed "200 kg (441 lbs.)" or "CL".
  CL = PC - (operator + passenger + opt. + acc. + cabin) weight
  (CL: Cargo Load / PC: Payload Capacity / opt.: option / acc.: accessory)

[Payload capacity]

Payload capacity kg (lbs.)	430 (949)

■Cargo Bed Tailgate

CAUTION

To avoid personal injury:

- **Do not apply a load to the tailgate while the tailgate is open, or the wire loop may break.**
- **Do not place fingers or hands between the tailgate and the arm (latch) when closing, or fingers or hands may be pinched.**

For loading and unloading, the tailgate of the cargo bed can be opened.
The tailgate is held level to the cargo bed floor with wire loops.
Do not move the vehicle with the tailgate fully lowered.
In a fully lowered position, the tailgate may obstruct the vehicle tail lamps and damage them by swinging motion.

1. Raise the arms (latch) at each end of the tailgate and open the tailgate.
2. Close the tailgate by lifting it and pushing it firmly closed. Push the arms (latch) down to make sure the latches stay securely closed.

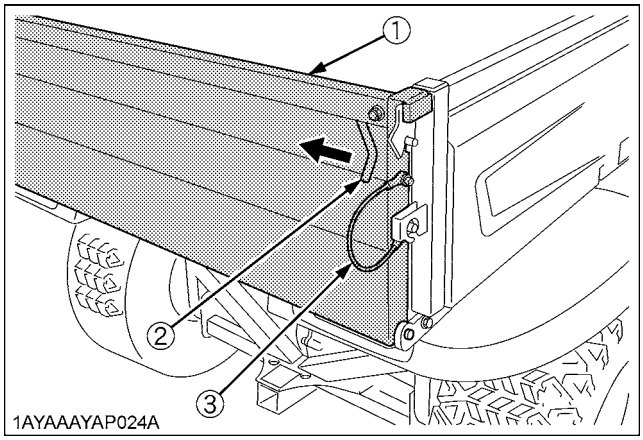

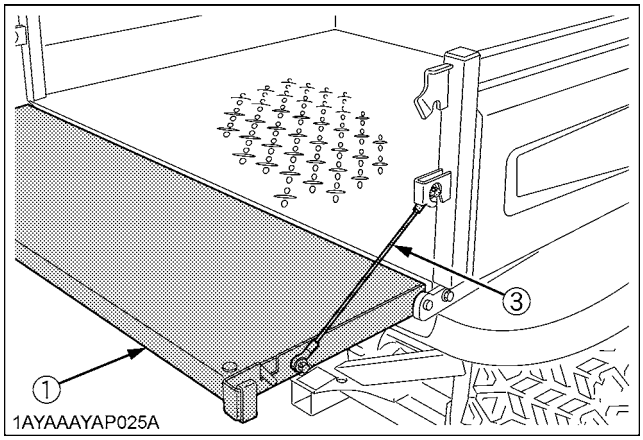

(1) Tailgate
(2) Arm (latch)
(3) Wire loop

IMPORTANT :

- TO AVOID TAILGATE DAMAGE:
  Remove the rear trailer hitch when wire loop is removed and cargo bed is raised.

■Raising and Lowering the Cargo Bed

CAUTION

To avoid personal injury;

- **Make sure the vehicle is on a firm, level surface and the parking brake is applied before raising the cargo bed and securing the cargo bed in the raised position.**
- **A loaded cargo bed can be very heavy. Never raise the cargo bed when it is loaded. Unload the cargo bed before raising it by hand.**

1. Park the vehicle on a flat surface.
2. Empty the cargo bed by hand.
3. Release the latches on both sides and then raise the cargo bed with the hand grip.

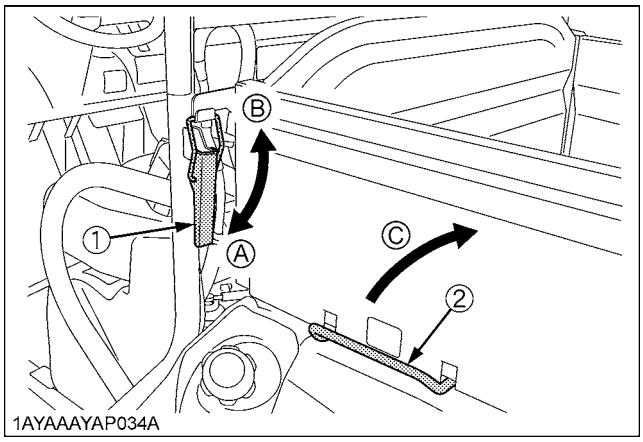

(1) Latch
(2) Hand grip
(A) "LOCK"
(B) "RELEASE"
(C) "RAISE"

4. Push the safety support into the latch slot to lock when the cargo is fully raised.

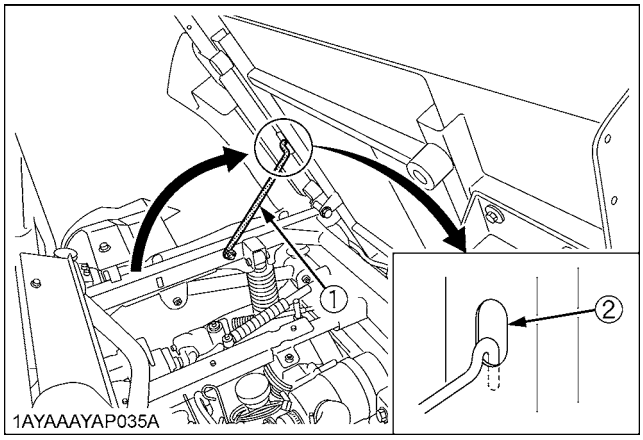

(1) Safety support
(2) Latch slot

5. To lower the cargo bed, raise the cargo bed slightly using the handgrip.
6. Release the safety support from the latch slot by pulling up on the middle of the support.
7. Put the safety support into the support holder.

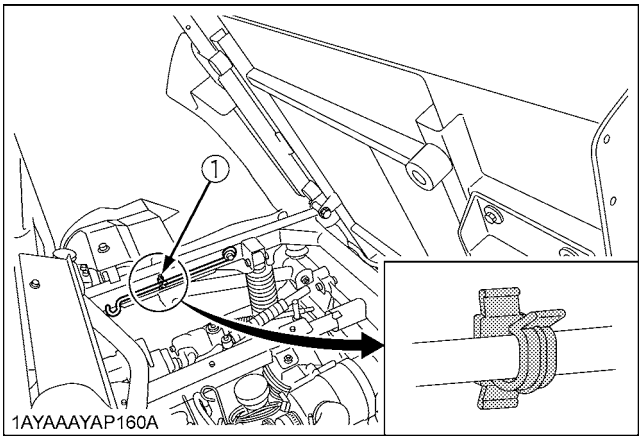

(1) Support holder

8. Slowly lower the cargo bed onto the frame and set the latches on both sides.

TIRES AND WHEELS

TIRES

WARNING

To avoid personal injury:

- **Do not attempt to mount a tire on a rim. This should be done by a qualified person with the proper equipment.**
- **Always maintain the correct tire pressure. Do not inflate tires above the recommended pressure shown in the operator's manual.**

IMPORTANT :

- Do not use tires other than those approved by KUBOTA.

■Inflation Pressure

Though the tire pressure is factory-set to the prescribed level, it naturally drops slowly in the course of time. Thus, check it everyday and inflate as necessary.

Tire sizes	Inflation Pressure
24 x 9 - 12 HDWS, Front 24 x 11 - 12 HDWS, Rear	97 kPa (0.97 kgf/cm^2, 14 psi)
24 x 9 - 12 ATV, Front 24 x 11 - 12 ATV, Rear	

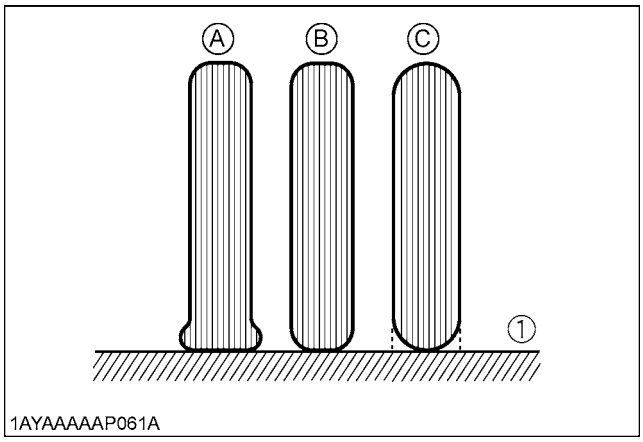

(1) Ground

(A) "INSUFFICIENT"
(B) "NORMAL"
(C) "EXCESSIVE"

■Tire Type and Use

◆ **Heavy duty work site tire**

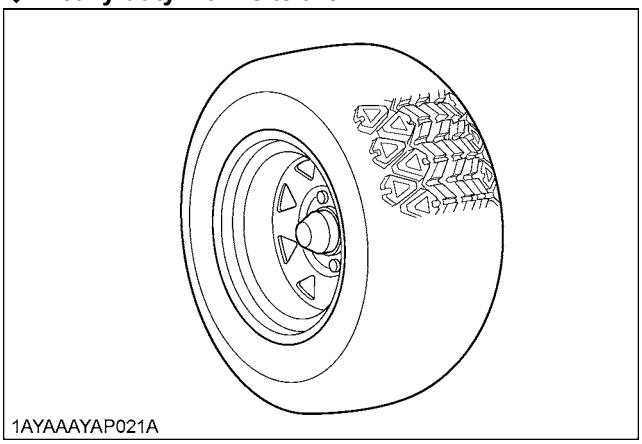

◆ **All terrain vehicle tire**

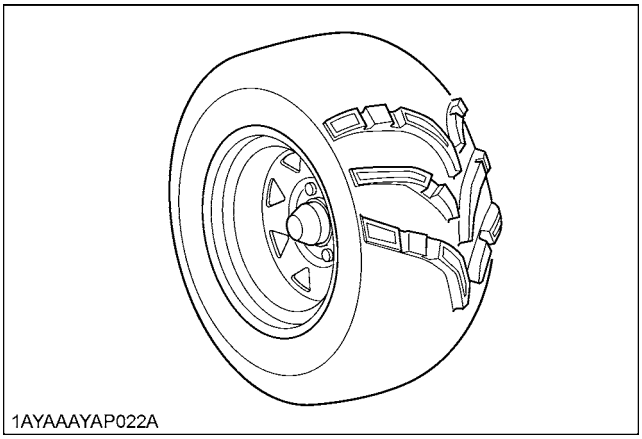

WHEELS

CAUTION

To avoid personal injury:

- **Support vehicle securely on stands before removing a wheel.**
- **Never operate vehicle with loose wheel bolts.**

IMPORTANT :

- When re-fitting a wheel, tighten the bolts to the following torques then recheck after driving the vehicle 200 m (200 yards) and thereafter according to service interval.

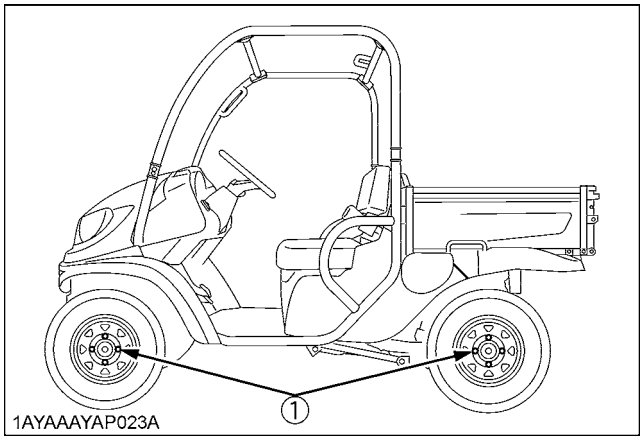

(1) Torque wheel bolts to 108.4 to 121.9 N-m (11 to 12.4 kgf-m) (80 to 90 ft-lbs.)

SHOCK ABSORBERS

■Rear Shock Absorber Spring Adjustment

CAUTION

To avoid personal injury:

- **Be sure to work on a firm, flat and level surface with the engine shut off and parking brake "ON".**
- **Keep the position of the left and right rear shock absorber equal.**
  Uneven adjustment can cause poor handling and loss of control, which could lead to an accident.

The spring adjusting sleeves on the rear shock absorbers have 5 positions so that the springs can be adjusted for different riding and loading conditions.
For adjusting the rear shock absorber springs, turn the adjusting sleeves on the shock absorbers to the desired position with the hook wrench.

[Rear shock absorber position]

Position	Spring	Feeling	Load
1	Stronger	Hard	Heavy
2	↑	↑	↑
3 (default)	I	I	I
4	↓	↓	↓
5	Weaker	Soft	Light

NOTE :

- If you feel any difficulty in the adjustment, consult your local KUBOTA dealer.

The rear shock absorber spring is adjusted to third position (default) in the figure below.

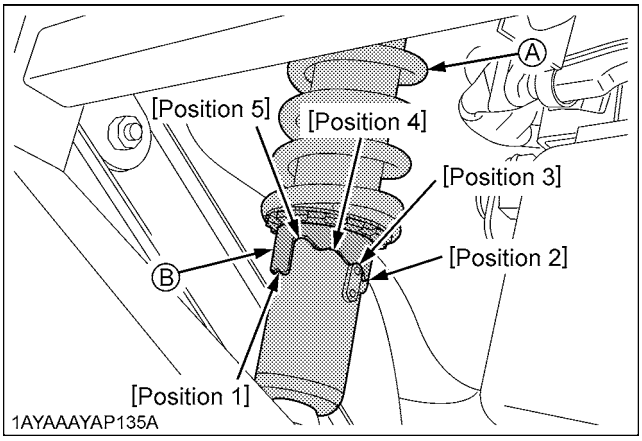

(A) Rear shock absorber
(B) Adjusting sleeve (Turn here with a hook wrench.)

TOWING AND TRANSPORTING

TOWING AND TRANSPORTING

■Rear Trailer Hitch

[if equipped]

WARNING

To avoid personal injury:

- **Always tow a load slowly enough to maintain control and avoid tipping.**
- **To provide adequate braking ability and traction, do not tow a load unless vehicle cargo bed is loaded or attachment is installed.**
- **Attach a trailer to the trailer hitch only.**

The rear trailer hitch load is listed in the "VEHICLE LIMITATIONS" section. When towing other equipment, use a safety chain.

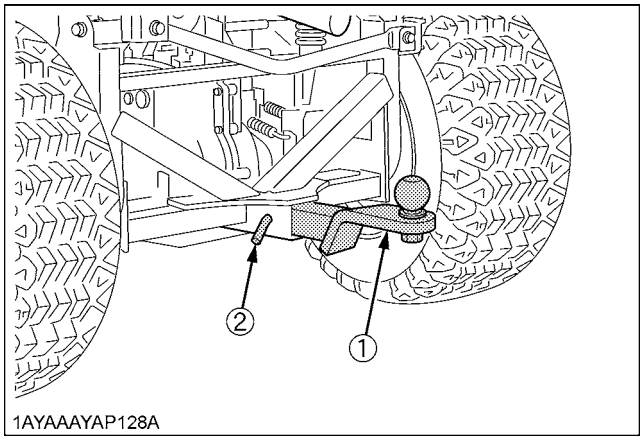

(1) Rear trailer hitch (if equipped)
(2) Hitch pin (if equipped)

■Front Trailer Hitch

[if equipped]

WARNING

To avoid personal injury:

- **Do not tow this vehicle unless all the functions of the vehicle are properly working, since the malfunction of steering operation or braking may cause an accident.**

Use the front trailer hitch for greater maneuverability in confined areas such as a barn.
The front trailer hitch load is listed in the "VEHICLE LIMITATIONS" section.

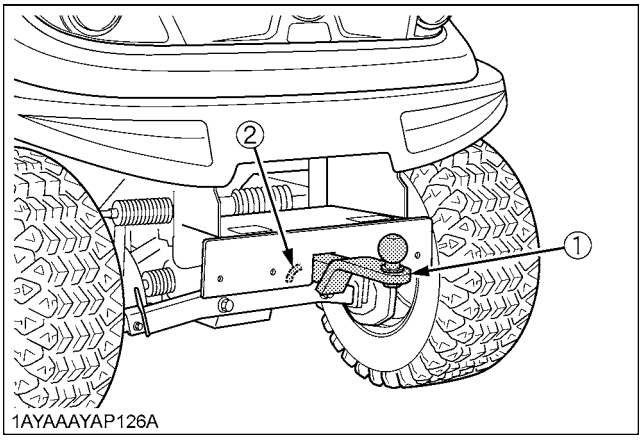

(1) Front trailer hitch (if equipped)
(2) Hitch pin (if equipped)

■Winch Mount Bracket

Mounting the optional winch always requires reading the instruction manual attached to the winch thoroughly before using it.

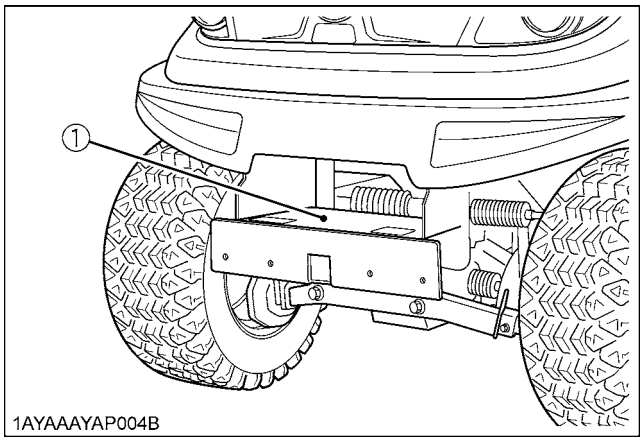

(1) Winch mount bracket

■Transporting Vehicle

Pay attention to the points below when transporting the vehicle.

1. Use a suitable truck or trailer.
2. Apply the parking brake and place chocks against the front and rear tires.
3. Secure the portions of the vehicle, which are shown in the figure below, by using strong straps or chains.

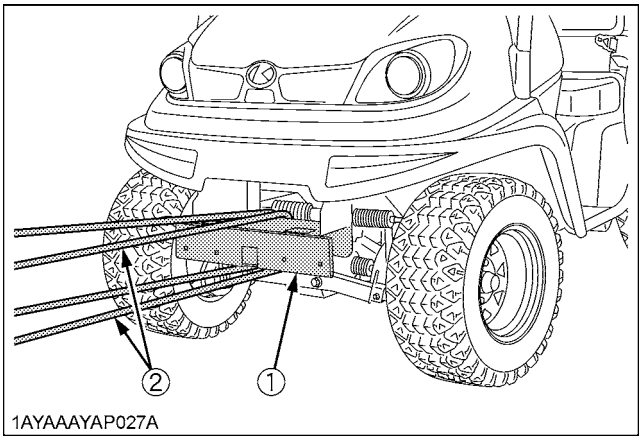

(1) Front bumper
(2) Heavy-duty strap

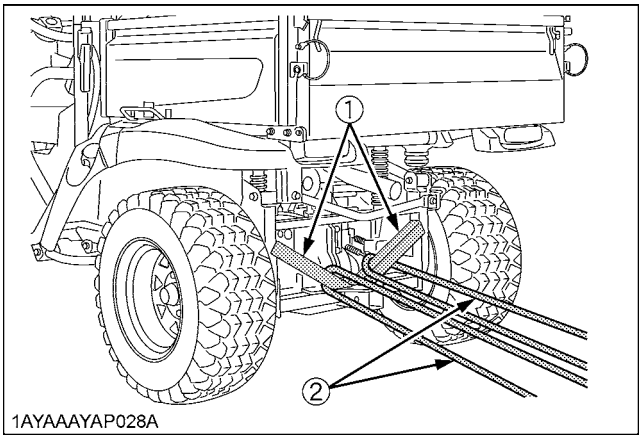

(1) Frame
(2) Heavy-duty strap

MAINTENANCE

CAUTION

To avoid personal injury and vehicle damage:

- **Be sure you have sufficient knowledge, experience, the proper replacement parts and tools before you attempt any vehicle maintenance task.**
- **If you don't have the knowledge and equipment which are necessary to perform the maintenance task, consult your local KUBOTA Dealer.**
- **Have your local KUBOTA Dealer perform inspection items which are marked *4 in the chart below.**

SERVICE INTERVALS

IMPORTANT :

- The jobs indicated by ◎ must be done after the first 50 hours of operation.

*1 Air cleaner should be cleaned more often in dusty conditions than in normal conditions.
*2 Every year or every 6 times of cleaning.
*3 Replace only if necessary.
*4 Consult your local KUBOTA Dealer for this service.
*5 When the battery is used for less than 100 hours per year, check the battery condition by reading the indicator annually.
*6 On every after 1000 Hr, clean it if necessary.

- GASOLINE ENGINE EMISSION RELATED MAINTENANCE INSTRUCTIONS:
  1. Non-warranty maintenance, repair, or replacement of the emission control devices and systems should be performed by a qualified repair establishment or individual which has the experience and equipment to perform such work. See the Emissions Warranty Statement.
  2. To ensure the best quality and reliability, use new KUBOTA Genuine parts or their equivalents for repair and replacement, whenever you have maintenance done.

No.	Items		Indication of Hour Meter														After 700 hrs	Ref. Page	
			50	100	150	200	250	300	350	400	450	500	550	600	650	700			
1	Greasing	Apply	○	○	○	○	○	○	○	○	○	○	○	○	○	○	every 50 hrs	47	
2	Engine start system	Check	○	○	○	○	○	○	○	○	○	○	○	○	○	○	every 50 hrs	49	
3	VHT neutral spring	Check		○		○		○		○		○		○		○	every 100 hrs	49	
4	Wheel bolt torque	Check	◎	○		○		○		○		○		○		○	every 100 hrs	49	
5	Air cleaner element	Clean		○		○		○		○		○		○		○	every 100 hrs	50	*1
		Replace															every 1 year	66	*2
6	Pre cleaner element	Clean		○		○		○		○		○		○		○	every 100 hrs	50	*1
		Replace															every 1 year	66	*2
7	Alternator drive belt	Adjust		○		○		○		○		○		○		○	every 100 hrs	51	*4
8	Fuel line	Check		○		○		○		○		○		○		○	every 100 hrs	53	
		Replace															every 2 years	68	*4

No.	Items		Indication of Hour Meter														After 700 hrs	Ref. Page	
			50	100	150	200	250	300	350	400	450	500	550	600	650	700			
9	Battery condition	Check		○		○		○		○		○		○		○	every 100 hrs	54	*5
10	Toe-in	Adjust		○		○		○		○		○		○		○	every 100 hrs	55	
11	Spark arrester	Clean		○		○		○		○		○		○		○	every 100 hrs	56	
12	Parking brake lever	Adjust	◎			○				○				○			every 200 hrs	57	*4
13	Engine oil filter	Replace	◎			○				○				○			every 200 hrs	57	
14	Engine oil	Change	◎			○				○				○			every 200 hrs	58	
15	Radiator cooling fins	Clean				○				○				○			every 200 hrs	59	
16	Transmission oil filter (HST) (Yellow color)	Replace	◎			○				○				○			every 200 hrs	60	
17	Transmission oil filter (Suction) (Orange color)	Replace	◎			○				○				○			every 200 hrs	60	
18	Transmission oil	Change								○							every 400 hrs	65	
19	Spark plug condition and gap	Check				○				○				○			every 200 hrs	61	
20	Brake pedal	Check	◎			○				○				○			every 200 hrs	62	*4
21	Brake hose & pipe	Check	◎			○				○				○			every 200 hrs	62	
		Replace															every 4 years	69	*4
22	Brake light switch	Check	◎			○				○				○			every 200 hrs	63	
23	Radiator hose and clamp	Check				○				○				○			every 200 hrs	63	
		Replace															every 2 years	68	
24	Intake air line	Check				○				○				○			every 200 hrs	64	
		Replace															every 2 years	68	*3
25	Tire wear	Check	◎					○						○			every 300 hrs	64	
26	Front axle case oil	Change								○							every 400 hrs	66	
27	Engine valve clearance	Adjust										○					every 500 hrs	66	
28	Engine combustion chamber	Clean															*6	66	
29	Engine timing belt	Check										○					every 500 hrs	66	
		Replace															every 1000 hrs	66	

No.	Items		Indication of Hour Meter														After 700 hrs	Ref. Page	
			50	100	150	200	250	300	350	400	450	500	550	600	650	700			
30	Brake fluid	Change															every 2 years	67	*4
31	Cooling system	Flush															every 2 years	67	
32	Coolant	Change															every 2 years	67	
33	Brake master cylinder (inner parts)	Replace															every 2 years	68	*4
34	Engine breather hose	Replace															every 2 years	68	
35	Brake pad wear	Check															Service as required	69	*4
36	Parking brake	Adjust																69	*4
37	Alternator drive belt	Adjust																69	*4
38	Fuse	Replace																70	
39	Light bulb	Replace																71	

LUBRICANTS, FUEL AND COOLANT

No.	Locations	Capacities	Lubricants
1	Fuel	20 L (5.3 U.S.gals.)	● Automobile unleaded or regular gasoline ● Unleaded gasoline 87 octane or higher
2	Coolant (with reserve tank)	1.8 L (1.9 U.S.qts.)	Fresh clean water with anti-freeze
3	Engine crankcase	[Filter exchanged] 1.35 L (1.43 U.S.qts.)** [Filter non-exchanged] 1.2 L (1.27 U.S.qts.)**	● Engine oil: API Service Classification SG, SH, SJ or higher Above -18℃ (0℉)...SAE10W-30 Below 0℃ (32℉).....SAE5W-20 or 5W-30
4	Transmission case	8.5 L (2.2 U.S.gals.)	● KUBOTA UDT or SUPER UDT-2 fluid*
5	Front axle case	0.21 L (0.22 U.S.qts.)	● KUBOTA UDT or SUPER UDT-2 fluid*
6	Brake fluid (reservoir and lines)	0.2 L (0.21 U.S.qts.)	KUBOTA **DOT3** GENUINE BRAKE FLUID

Greasing	No. of greasing points	Capacity	Type of grease
VHT link	1	Until grease overflows	Multipurpose Grease NLGI-2 OR NLGI-1(GC-LB)
Battery terminal	2	Moderate amount	Spray Type Grease
Cargo bed pivot	2		
Parking brake pivot	2		
Range gear shift lever pivot	1		
4WD lever pivot	1		
Differential lock lever	1		
Bypass link	1		

NOTE :

*KUBOTA UDT or SUPER UDT-2 fluid --- KUBOTA original transmission hydraulic fluid

**Oil amount when the oil level is at the upper level of the oil level gauge.

NOTE :

◆ Engine Oil:
Oil used in the engine should have an American Petroleum Institute (API) service classification and Proper SAE Engine Oil according to the ambient temperatures as shown above:

◆ Fuel:
- Gasohol (up to 10% ethyl alcohol, 90% unleaded gasoline by volume) is approved for the engine. Other gasoline/alcohol blends are not approved.

◆ Transmission oil:
To complete lubrication of the transmission, it is important that a multi-grade transmission fluid be used in this system. We recommend the use of **KUBOTA UDT or SUPER UDT-2 fluid** for optimum protection and performance. (Consult your local KUBOTA Dealer for further detail.)
Do not mix different brands or grades.

◆ Brake fluid:
Always use KUBOTA **DOT3** GENUINE BRAKE FLUID from a sealed container. If it is not available, you should use only DOT3 fluid as a temporary replacement from a sealed container.
However, the use of any non-KUBOTA brake fluid can cause corrosion and decrease the life of the system.
Have the brake system flushed and refilled with KUBOTA **DOT3** GENUINE BRAKE FLUID as soon as possible.

- Indicated capacity of water and oil are manufacturer's estimate.

PERIODIC SERVICE

CAUTION

To avoid personal injury:

- **Do not work under any hydraulically supported devices. They can settle, suddenly leak down, or be accidentally lowered. If necessary to work under vehicle or any vehicle elements for servicing or adjustment, securely support them with stands or suitable blocking beforehand.**

HOW TO OPEN THE HOOD AND TILT THE SEAT

CAUTION

To avoid personal injury from contact with moving parts;

- **Never open the operator's seat while the engine is running.**

■Hood

1. To open the hood, pull up the latch lever to release the latch and open the hood.
2. Push the support link into the hole to lock when the hood is fully raised.

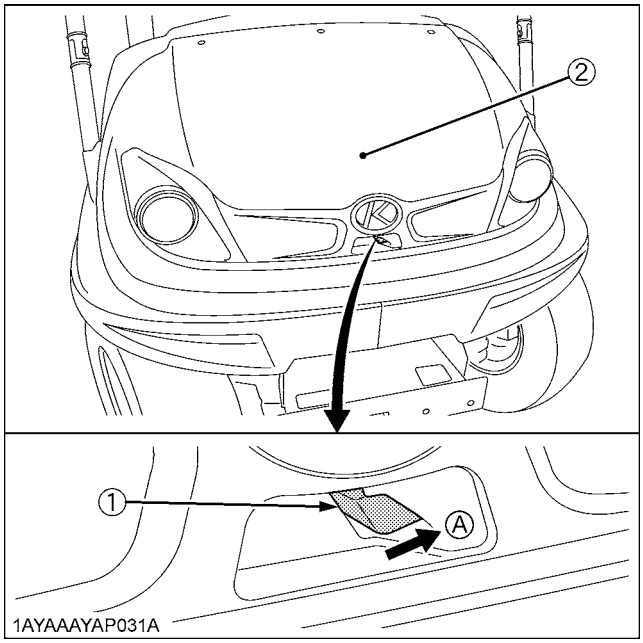

(1) Latch lever *(A) "RELEASE"*
(2) Hood

3. To close the hood, hold the hood and lift up it slightly and pull the support link to unlock.
4. Put the support link into the support holder.
5. Press-fit the hood into position with both hands.

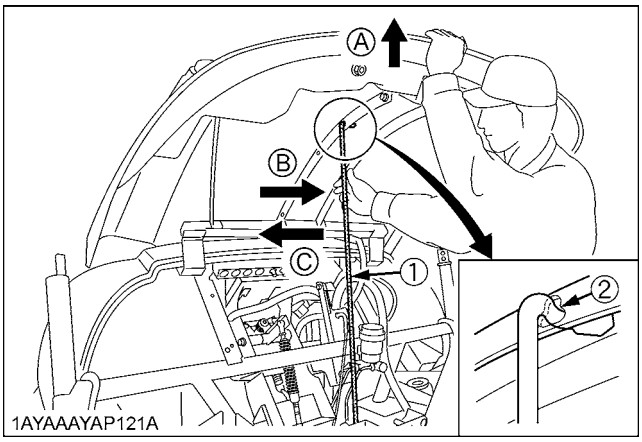

(1) Support link *(A) "HOLD"*
(2) Hole *(B) "PUSH" (Lock)*
(C) "PULL" (Unlock)

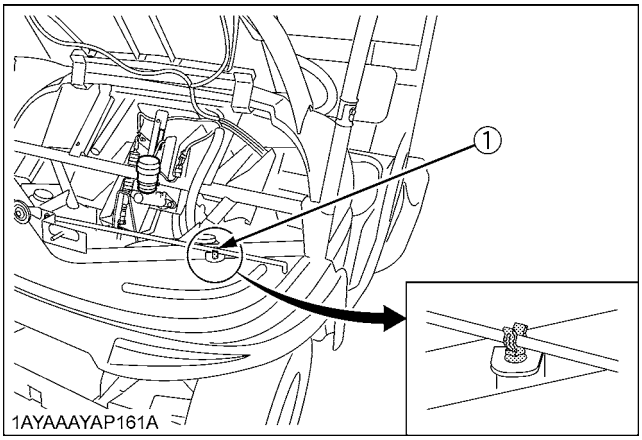

(1) Support holder

■Operator's Seat

To open the seat, raise the seat to the forward position.

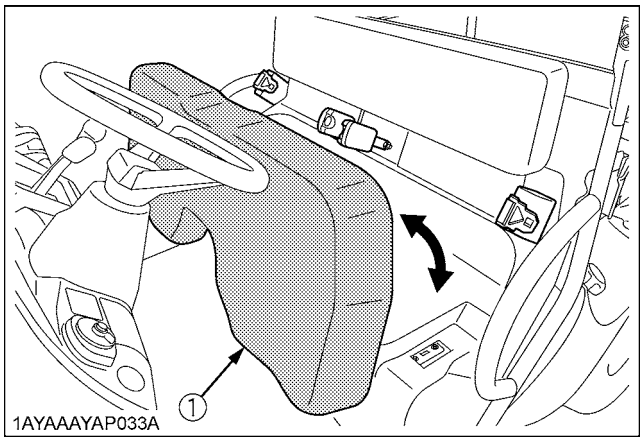

(1) Operator's seat

NOTE :

- For the component below the seat, turn over the rubber sheet to work on it as shown in the figure below.

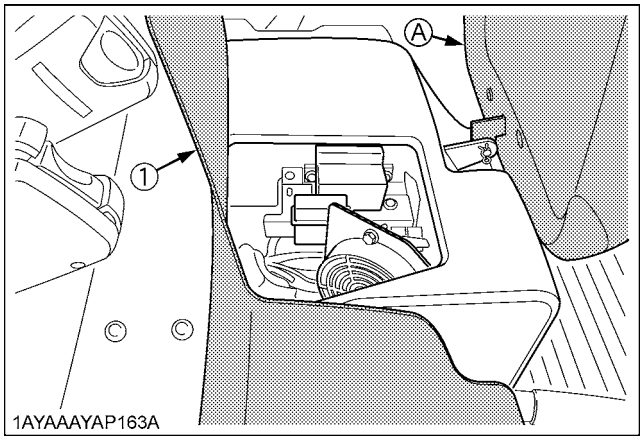

(1) Rubber sheet *(A) Seat*

HOW TO RAISE THE CARGO BED

CAUTION

To avoid personal injury:

- **When servicing under raised bed, make sure safety support is properly mounted.**
- **Do not touch muffler or exhaust pipes while they are hot; Severe burns could result.**

■Raising and Lowering the Cargo Bed

CAUTION

To avoid personal injury;

- **Make sure the vehicle is on a firm, level surface and the parking brake is applied before raising the cargo bed and securing the cargo bed in the raised position.**
- **A loaded cargo bed can be very heavy. Never raise the cargo bed when it is loaded. Unload the cargo bed before raising it by hand.**

1. Park the vehicle on a flat surface.
2. Empty the cargo bed by hand.
3. Release the latches on both sides and then raise the cargo bed with the hand grip.

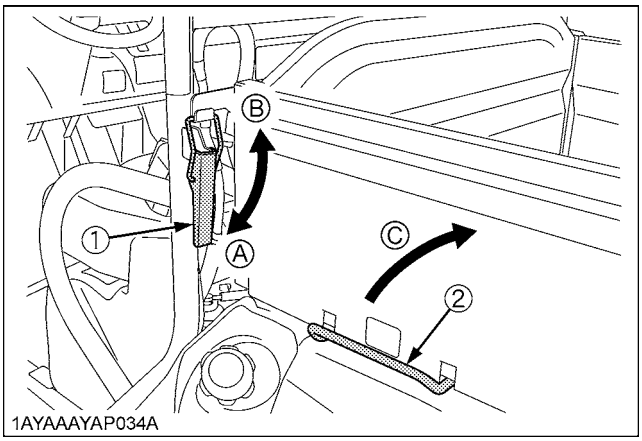

(1) Latch *(A) "LOCK"*
(2) Hand grip *(B) "RELEASE"*
(C) "RAISE"

4. Push the safety support into the latch slot to lock when the cargo is fully raised.

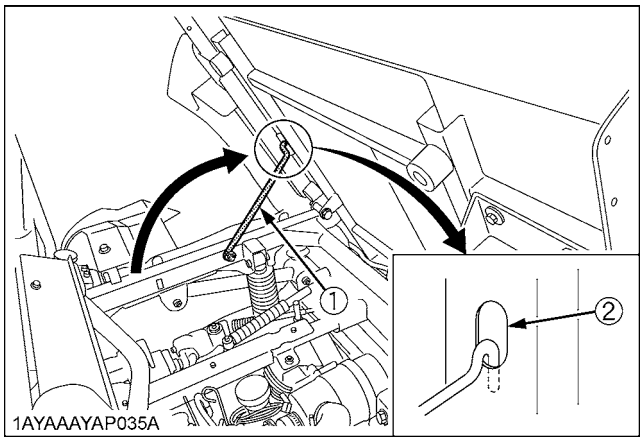

(1) Safety support
(2) Latch slot

5. To lower the cargo bed, raise the cargo bed slightly using the handgrip.
6. Release the safety support from the latch slot by pulling up on the middle of the support.
7. Put the safety support into the support holder.

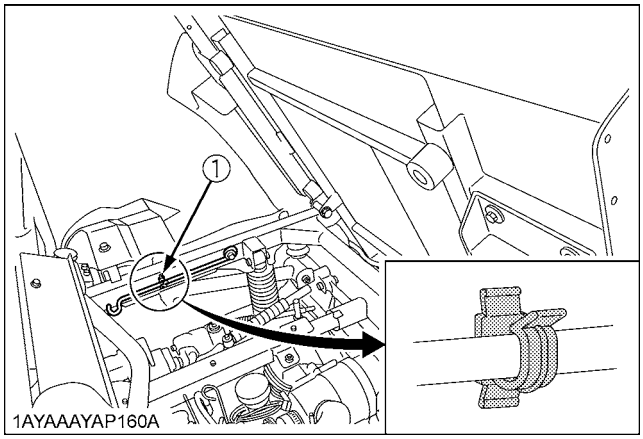

(1) Support holder

8. Slowly lower the cargo bed onto the frame and set the latches on both sides.

JACK-UP POINT

WARNING

To avoid personal injury, death or vehicle damage:

- **Do not work under the vehicle unless it is secured by safe stands or suitable blocking.**

■Front End

Jack up at the front bumper only.

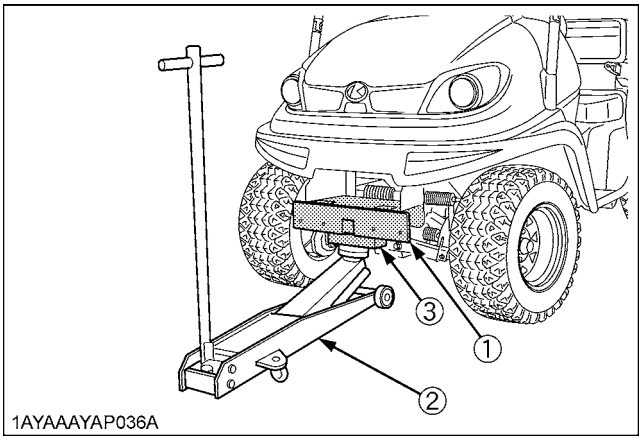

(1) Front bumper
(2) Jack
(3) Wooden block

■Rear End

Jack up the rear side after placing a wooden block under the transmission bottom cover for securing the engine and then supporting it.
Do not jack it up supporting the steel plate portion under the transmission bottom cover directly.

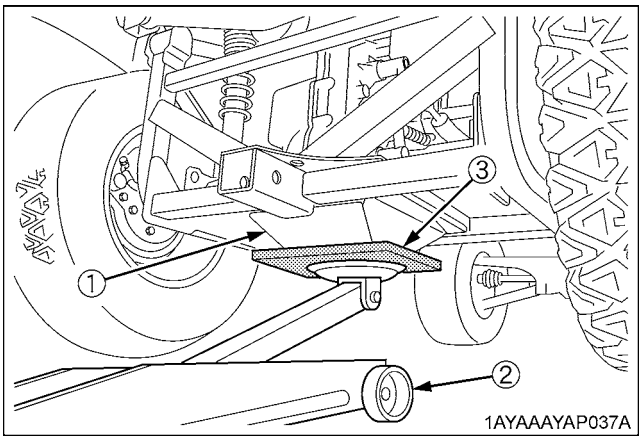

(1) Transmission bottom cover
(2) Jack
(3) Wooden block

DAILY CHECK

For your own safety and maximum service life of the vehicle, make a thorough daily inspection before operating the vehicle to start the engine.

CAUTION

To avoid personal injury:

- **Be sure to check and service the vehicle on a flat surface with the engine shut off and the parking brake "ON".**

■Walk Around Inspection

Look around and under the vehicle for such items as loose bolts, trash build-up, oil or coolant leaks, broken or worn parts.

■Checking Amount of Fuel and Refueling

CAUTION

To avoid personal injury:

- **Handle fuel carefully. If the engine is running, do not fill the fuel tank. If engine is hot, let engine cool several minutes before adding fuel. Do not smoke while filling the fuel tank or servicing the fuel system. Fill fuel tank only to bottom of filler neck. Do not fill completely full. The empty space in the tank allows gasoline to expand, when it heats up. Never remove the fuel tank cap or add fuel when the fuel tank is hot.**

1BDABARAP121A

Check the fuel level. Take care that the fuel tank does not become empty.

Fuel tank capacity	20 L (5.3 U.S.gals.)

IMPORTANT :

- Do not mix oil with gasoline.

Use only unleaded gasoline with an octane rating index of 87 or higher may be used.

NOTE :

- Use fuel within approximately 30 days after purchase to avoid deterioration in fuel quality, or add fuel stabilizer to keep fuel fresh and stabilized.
- Fuel blend differs from season to season for the best seasonal engine performance. To prevent engine performance troubles such as vapor lock or hard starting, use fuel within the season in which the fuel is purchased.
- Infrequent use of the engine during a season can make fuel stale in the fuel tank of the machine. Stale fuel condition can cause engine performance troubles by varnish and plugged carburetor components.
- Seal the fuel storage container tightly and store it out of sunlight and heat to prevent fuel degradation.
- Condensation in the fuel tank may occur because of various operating or environmental conditions. To reduce condensation and avoid affecting machine operation, fill the fuel tank at the end of daily operation and store fuel in the plastic container.

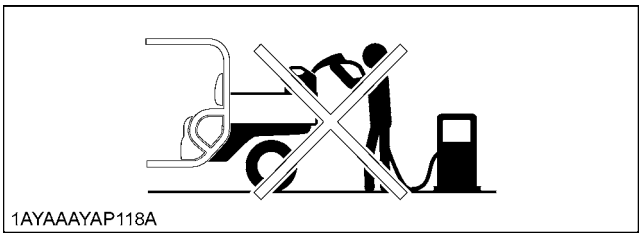

1AYAAAYAP118A

- Use only an approved fuel container. Use only non-metal, portable fuel containers approved by the Underwriter's Laboratory (U.L.) or the American Society for Testing & Materials (ASTM). If using a funnel, make sure it is plastic and has no screen or filter.
- Never remove the fuel tank cap or add fuel with the engine running. Allow the engine to cool before refueling.
- Never add fuel to or drain fuel from the machine indoors. Move the machine outdoors and provide adequate ventilation.
- Clean up spilled fuel immediately. If fuel is spilled on clothing, change clothing immediately. If fuel is spilled near machine, do not attempt to start the engine but move the machine away from the area of spillage. Avoid creating any source of ignition until fuel vapors have dissipated.
- Never store the machine or fuel container where there is an open flame, spark, or pilot light such as on a water heater or other appliance.
- Prevent fire and explosion caused by static electric discharge. Static electric discharge can ignite fuel vapors in an ungrounded fuel container.
- Never fill containers inside a vehicle or on a truck or a trailer bed with a plastic liner. Always place containers on the ground away from your vehicle before fueling.

- Remove fuel-powered equipment from the truck or the trailer and refuel it on the ground. If this is not possible, then refuel such equipment with a portable container, rather than from a fuel dispenser nozzle.
- Keep the nozzle in contact with the rim of the fuel tank or container opening at all times until the fueling is complete. Do not use a nozzle lock-open device.
- Never overfill fuel tank. Replace the fuel tank cap and tighten securely.
- Replace all fuel container caps securely after use.
- For gasoline engines, do not use gas with methanol. Methanol is harmful to your health and to the environment.

IMPORTANT :
- Do not use stale fuel.
- Fill fuel tank at the end of daily operation to prevent condensation in the fuel tank.

[Use of alcohol mixed gasoline (Gasohol)]
Use "gasohol" only when the ethanol additive is less than 10% of the fuel. The use of methanol additive is not recommended. For the best results, use unleaded fuel with a minimum of 87 octane.

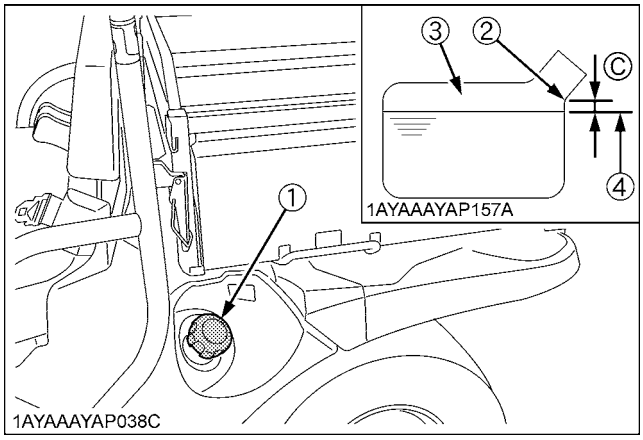

(1) Fuel tank cap
(2) Fuel tank filler neck
(3) Empty space
(4) Max. fuel level
(C) Clearance (Fuel level is under the filler neck lower side.)

■Checking Engine Oil Level

CAUTION
To avoid personal injury:
- **Be sure to stop the engine before checking the oil level.**

1. Park the vehicle on a flat surface and raise the cargo bed. Shut off the engine and remove the key.
2. Allow the engine to cool for 5 minutes or more.
3. To check the oil level, draw out the dipstick, wipe it clean, replace it, and draw it out again. Check to see that the oil level lies between the two notches.
   If the level is too low, add new oil to the prescribed level at the oil inlet.
   (See "LUBRICANTS, FUEL AND COOLANT" in "MAINTENANCE" section.)

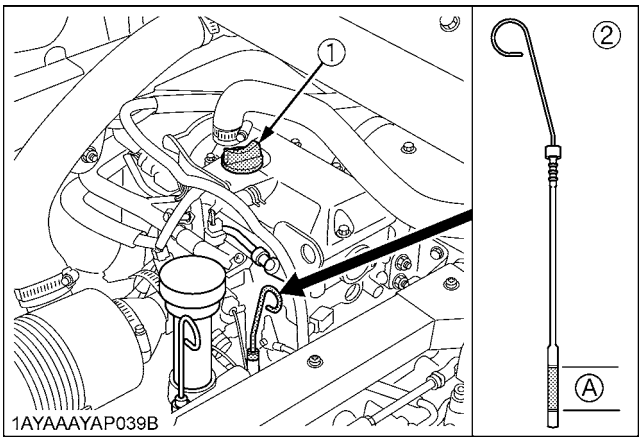

(1) Oil inlet
(2) Dipstick
(A) Oil level is acceptable within this range.

IMPORTANT :
- When using an oil of different maker or viscosity from the previous one, remove all of the old oil.
  Never mix two different types of oil.
- If oil level is low, do not run engine.

■Checking Transmission Fluid Level

1. Park the vehicle on a flat surface and raise the cargo bed. Shut off the engine and remove the key.
2. Allow the engine to cool for 5 minutes or more.
3. To check the oil level, draw out the dipstick, wipe it clean, replace it, and draw it out again. Check to see that the oil level lies between the two notches.
   If the level is too low, add new oil to the prescribed level at the oil inlet.
   (See "LUBRICANTS, FUEL AND COOLANT" in "MAINTENANCE" section.)

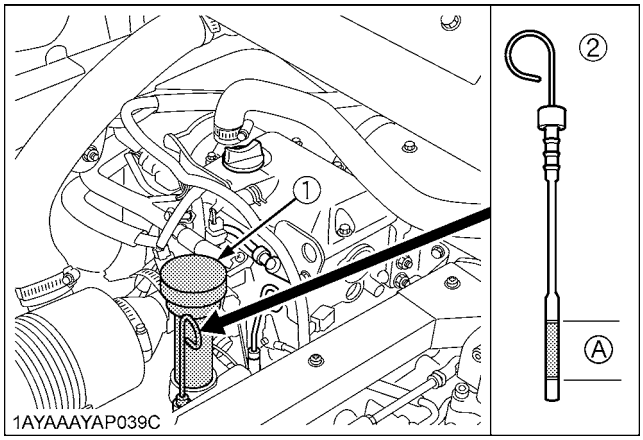

(1) Oil inlet *(A) Oil level is acceptable within this range.*
(2) Dipstick

IMPORTANT :
- If oil level is low, do not run engine.

■Checking Coolant Level

CAUTION

To avoid personal injury:
- **Do not remove radiator cap while coolant is hot. When cool, slowly rotate cap to the first stop and allow sufficient time for excess pressure to escape before removing the cap completely.**

1. Park the vehicle on a flat surface and raise the cargo bed.
2. Check to see that the coolant level is between the "FULL" and "LOW" marks of recovery tank.
3. When the coolant level drops due to evaporation, add water only up to the full level.
   In case of leakage, add anti-freeze and water in the specified mixing ratio up to the full level.
   (See "Flush Cooling System and Changing Coolant" in "EVERY 2 YEARS" in "PERIODIC SERVICE" section.)

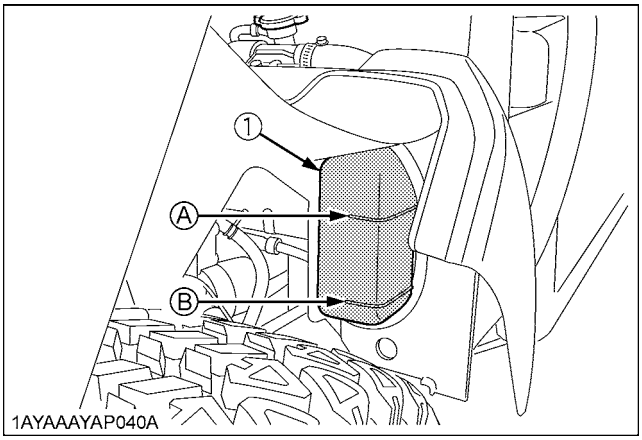

(1) Recovery tank *(A) "FULL"*
(B) "LOW"

IMPORTANT :
- If the radiator cap has to be removed, follow the caution above and securely retighten the cap.
- Use clean, fresh water and anti-freeze to fill the recovery tank.
- If water should leak, consult your local KUBOTA Dealer.

■Cleaning Radiator Screen

CAUTION

To avoid personal injury:

- **Be sure to stop the engine before removing the screen.**

1. Park the vehicle on a flat surface and raise the seat.
2. Detach the screen and remove all foreign materials.

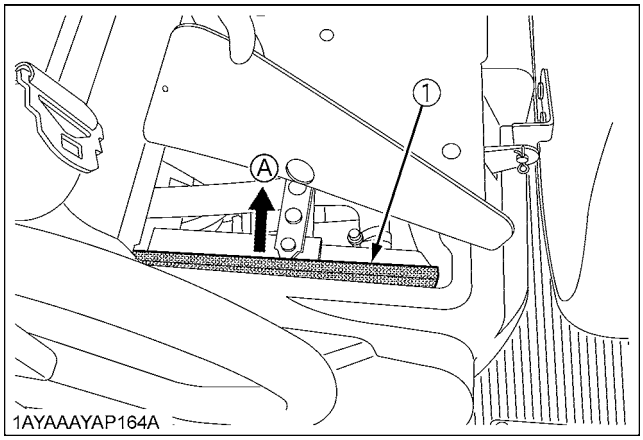

(1) Radiator screen *(A) "DETACH"*

IMPORTANT :

- Radiator screen must be clean from debris to prevent engine from overheating.

■Checking Engine Cooling Fan

[For those of the engine serial number 8U0086 or later, check the fan operation.]

CAUTION

To avoid personal injury:

- **Do not stick your finger in the fan operating section when performing visual check.**
- **Wear protective equipment when performing visual check.**
- **Never start engine while standing on the ground.**
  Start engine only from the operator's seat.

1. Park the vehicle on a flat surface and apply the parking brake.
2. Start up the engine.
3. After starting up the engine, get off the operator's seat and hold up the seat to visually check that the fan is operating.
4. The fan should come on 5 sec. after starting engine and operate for 10 sec.
5. If the fan will not operate, do not operate the vehicle but consult with your dealer.

[Exceptions in Operation]

- If the engine coolant temperature is higher than 87℃ (≧87℃) at startup, the fan will turn on immediately and run until the engine coolant temperature is less than 80℃ (<80℃).
- When the water temperature sensor is in trouble, the fan start operating.

IMPORTANT :

- If the engine startup is failed, return the key to the "OFF" position (ENGINE STOP POSITION).

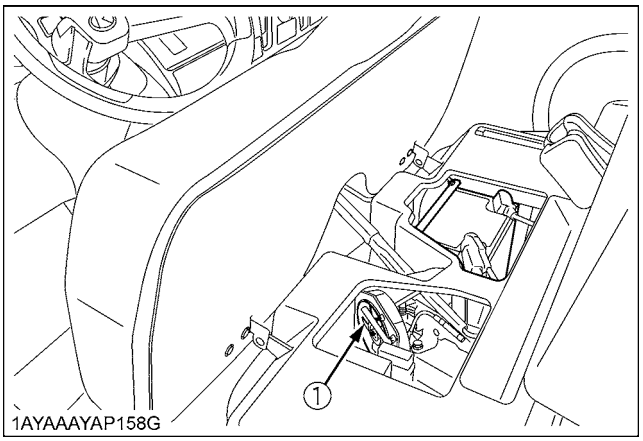

(1) Engine cooling fan

■Checking Brake Fluid Level

CAUTION

To avoid personal injury:

- **Never operate the vehicle, if the brake fluid is below the "MIN" mark.**
- **Use only KUBOTA DOT3 GENUINE BRAKE FLUID from a sealed container. Using other type of oil ruins synthetic resin or rubber installed in brake system components, and may cause brake failure.**
- **Avoid contamination of the brake fluid. Thoroughly clean area around the filler cap before removing. Do not open the brake fluid reservoir cap unless absolutely necessary.**
- **Use extreme care when filling the reservoir. If brake fluid is spilled on power steering hose, wash off with water immediately. Brake fluid quickly ruins synthetic resin or rubber hoses.**

1. Park the vehicle on a level ground and open the hood.
2. Check to see that the brake fluid level is between the "MAX" and "MIN" marks.
3. If it is below the "MIN" mark, add brake fluid to the "MAX" mark.

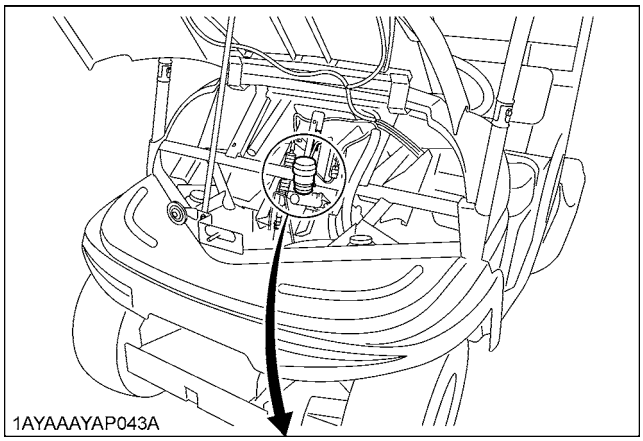

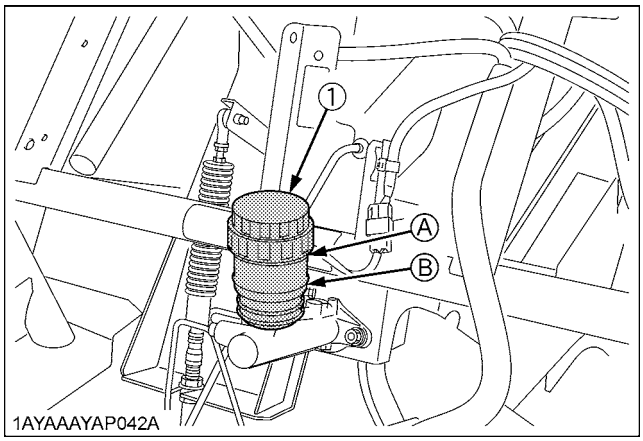

(1) Oil tank cap *(A) "MAX"* *(B) "MIN"*

■Checking Brake Pedal

CAUTION

To avoid personal injury:

- **Stop the engine and chock the wheels before checking brake pedal.**

1. Inspect the brake pedals for free travel, and smooth operation.
2. Adjust if incorrect measurement is found: (See "Checking Brake Pedal" in "EVERY 200 HOURS" in "PERIODIC SERVICE" section.)

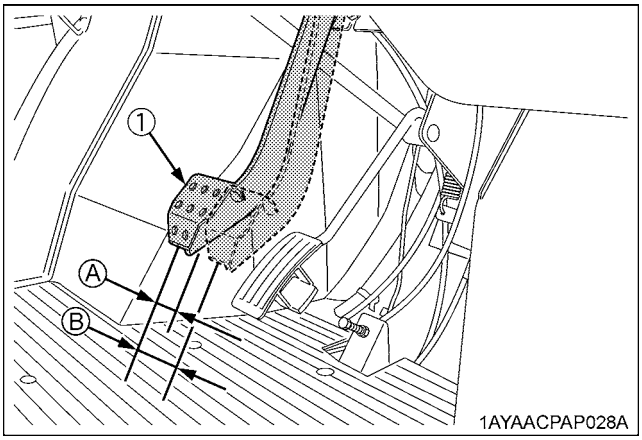

(1) Brake pedal *(A) "FREE TRAVEL"* *(B) "PEDAL STROKE"*

■Checking Parking Brake

Pull the parking brake lever to apply the brakes. With the key switch at "ON" position, the brake indicator on the instrument panel lights up. To release the brakes, push in the button at the tip of the parking brake lever and tilt down the lever.

NOTE :

- Make sure the brake indicator light on the Easy Checker(TM) goes off when parking brake lever is down.

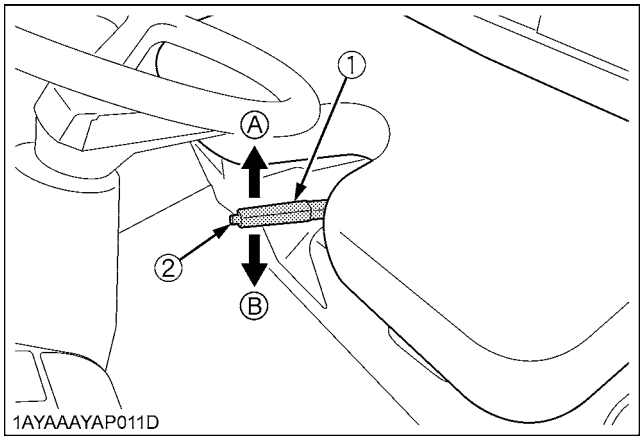

(1) Parking brake lever *(A) "PULL"*
(2) Release button *(B) "RELEASE"*

■Checking Gauges, Meter and Easy Checker(TM)

1. Inspect the instrument panel for broken gauge(s), meter(s) and Easy Checker(TM) lamps.
2. Replace if broken.

■Checking Head Light, etc.

1. Inspect the lights for broken bulbs and lenses.
2. Replace if broken.

■Checking Seat Belt and ROPS

1. Always check condition of seat belt and ROPS attaching hardware before operating vehicle.
2. Replace if damaged.

■Checking Joint Boot

1. Check to see if the joint boots are not damaged.
2. If the boots are cuts, cracked or shows signs of deterioration, consult your local KUBOTA Dealer.

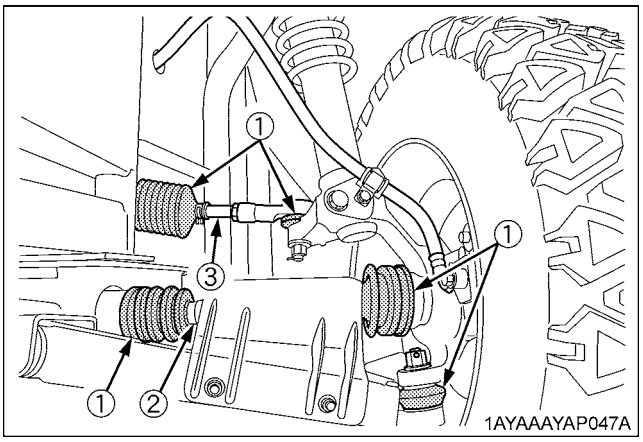

(1) Joint boot
(2) Front drive shaft
(3) Tie rod

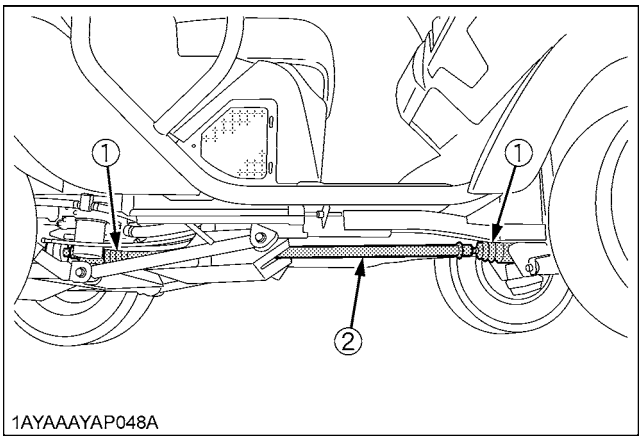

(1) Joint boot
(2) Drive shaft

■Checking Tire Inflation Pressure

Though the tire pressure is factory-set to the prescribed level, it naturally drops slowly in the course of time. Thus, check it everyday and inflate as necessary.

Tire sizes	Inflation Pressure
24 x 9 - 12 HDWS, Front 24 x 11 - 12 HDWS, Rear	97 kPa (0.97 kgf/cm², 14 psi)
24 x 9 - 12 ATV, Front 24 x 11 - 12 ATV, Rear	

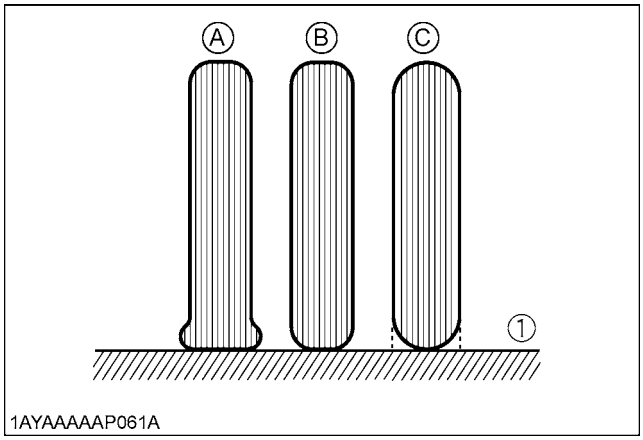

(1) Ground

(A) "INSUFFICIENT"
(B) "NORMAL"
(C) "EXCESSIVE"

EVERY 50 HOURS

■Greasing

Apply a small amount of multi-purpose grease to the following points every 50 hours: If you operated the vehicle in extremely wet and muddy conditions, lubricate grease fittings more often.

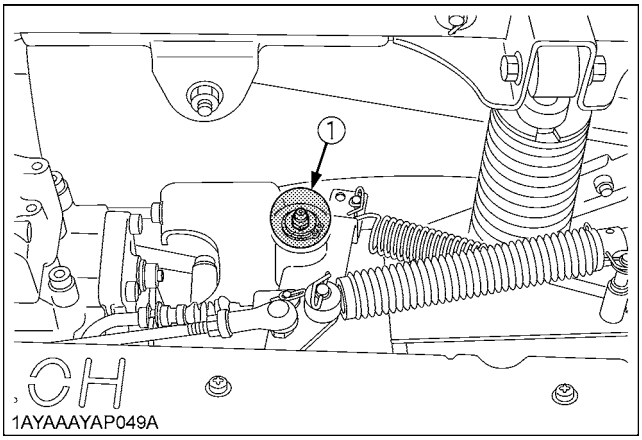

(1) VHT link (Grease fitting)

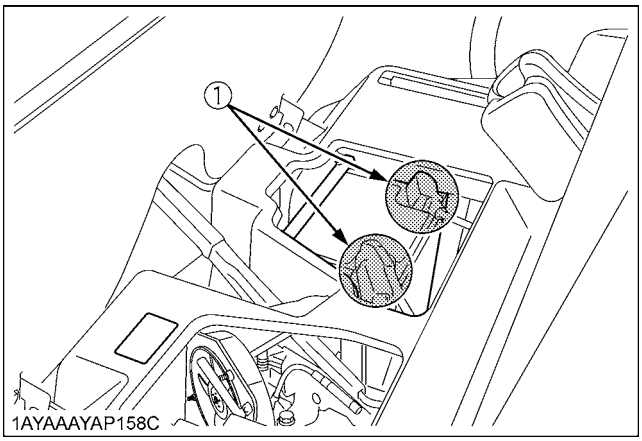

(1) Battery terminals (spray type grease)

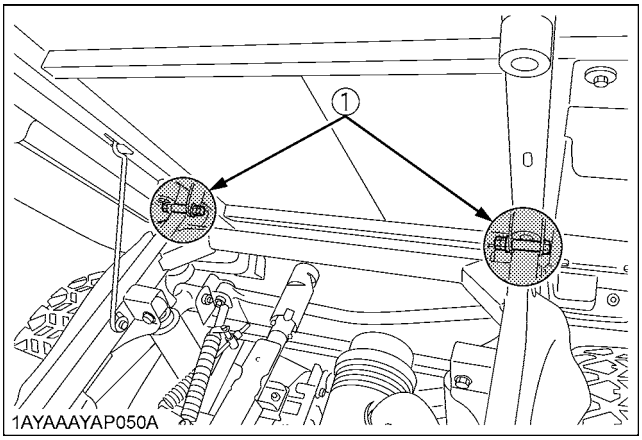

(1) Cargo bed pivot (spray type grease)

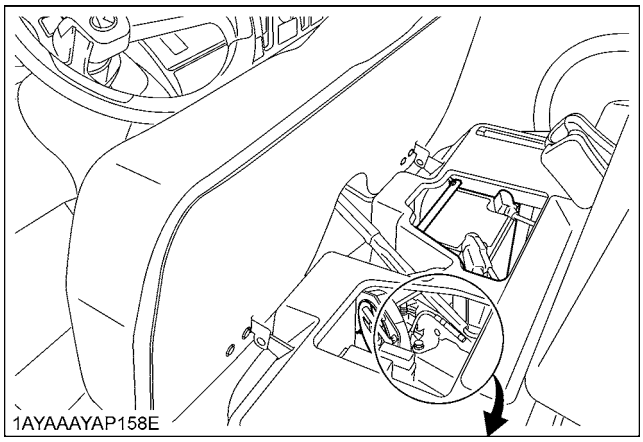

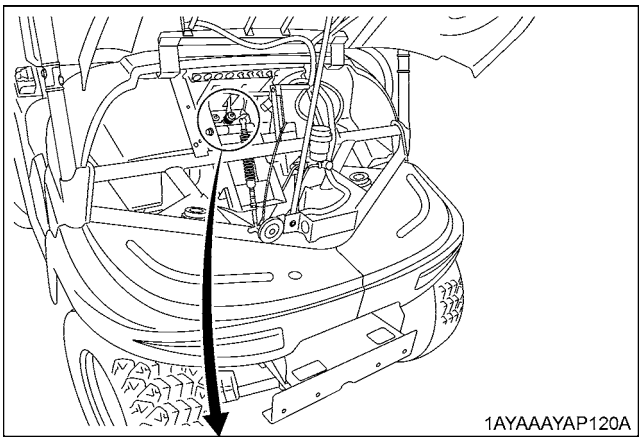

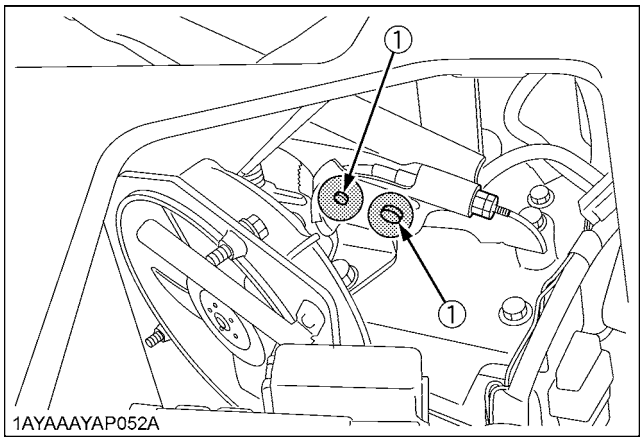

(1) Parking brake pivot (spray type grease)

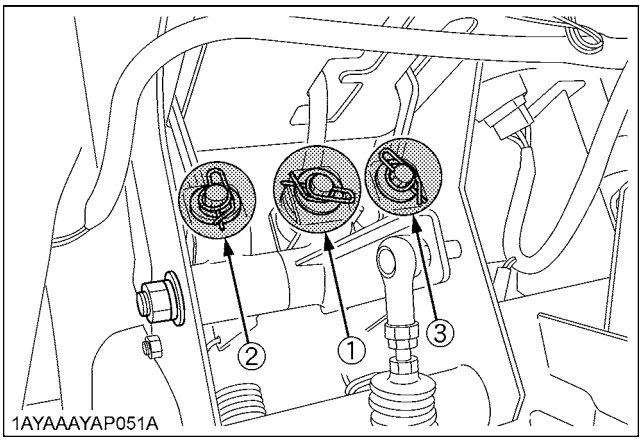

(1) Range gear shift lever pivot (spray type grease)
(2) 4WD lever pivot (spray type grease)
(3) Differential lock lever (spray type grease)

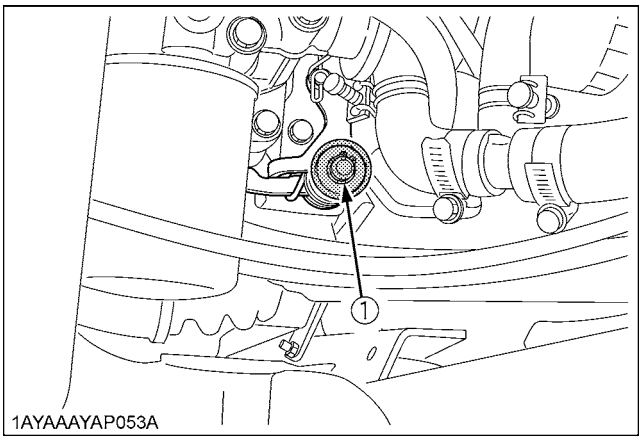

(1) Bypass link (spray type grease)

■Checking Engine Start System

CAUTION

To avoid personal injury:

- **Do not allow anyone near the vehicle while testing.**
- **If the vehicle does not pass the test do not operate the vehicle.**

◆ **Preparation before testing.**

1. Place all control levers in the "NEUTRAL" position.
2. Set the parking brake and stop the engine.

◆ **Test: Range gear shift lever safety switch**

1. Sit on the operator's seat.
2. Shift the range gear shift lever to "H" position.
3. Return the Speed control pedal to the "N" position.
4. Turn the key to "START" position.
5. The engine must not crank.
6. Repeat the step 2 to 5 with the range gear shift lever at "L" and "R" each position.

EVERY 100 HOURS

■Checking VHT Neutral Spring

1. Park the vehicle on a flat place.
2. Apply the parking brake.
3. Shift the range gear shift lever to the neutral position.
4. Start the engine.
5. Make sure that the rotation speed of the engine returns to the idling rotation immediately when taking the foot off the pedal, after depressing the speed control pedal several times. If the above does not occur immediately, consult your local KUBOTA dealer for this service.

■Checking Wheel Bolt Torque

CAUTION

To avoid personal injury:

- **Never operate vehicle with a loose wheel bolts.**
- **Any time bolts are loosened, retighten to the specified torque.**
- **Check all bolts frequently and keep them tight.**

Check wheel bolts regularly especially when new. If they are loose, tighten them as follows.

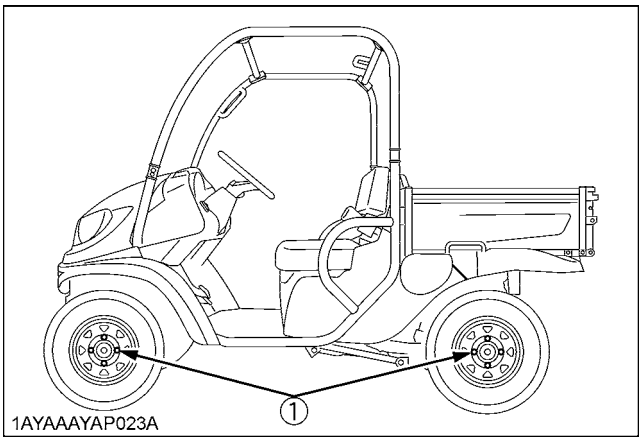

(1) Torque wheel bolts to 108.4 to 121.9 N-m (11 to 12.4 kgf-m) (80 to 90 ft-lbs.)

■Cleaning Air Cleaner Primary Element

1. Remove the air cleaner cover and primary element.
2. Clean the primary element:
   (1) When dry dust adheres to the element, blow compressed air from the inside, turning the element. Pressure of compressed air must be under 205 kPa (2.1 kgf/cm², 30 psi).
   (2) When carbon or oil adheres to the element, replace the element with new one even if it has not been used for 1 year.
3. Replace the primary element:
   Once yearly or after every sixth cleaning, whichever comes first.

NOTE :
- Check to see if the evacuator valve is blocked with dust.
- Check the rubber seal. Replace if damaged.

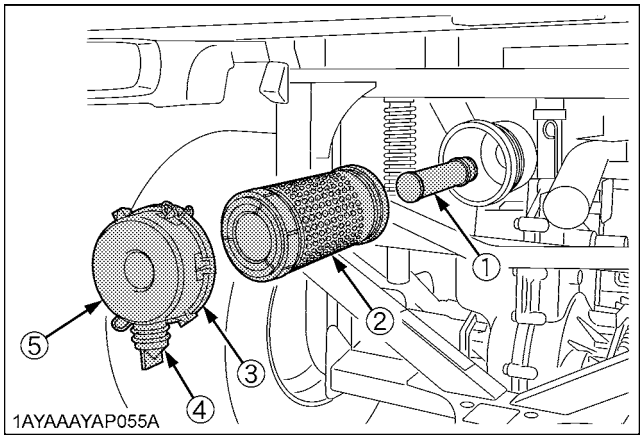

(1) Secondary (safety) element
(2) Primary element
(3) Rubber seal
(4) Evacuator valve
(5) Cover

IMPORTANT :
- The air cleaner uses a dry element, never apply oil.
- Do not run the engine with filter element removed.
- Be sure to refit the cover with the arrow (on the rear of cover) upright. If the cover is improperly fitted, evacuator valve will not function and dust will adhere to the element.
- Do not touch the secondary element except in cases where replacing is required.
  (See "Replacing Air Cleaner Secondary Element" in "EVERY 1 YEAR" in "PERIODIC SERVICE" section.)

◆ **Evacuator Valve**

Open the evacuator valve once a week under ordinary conditions - or daily when used in a dusty place - to get rid of large particles of dust and dirt.

■Cleaning Pre Cleaner Element

1. Remove the Pre cleaner element.

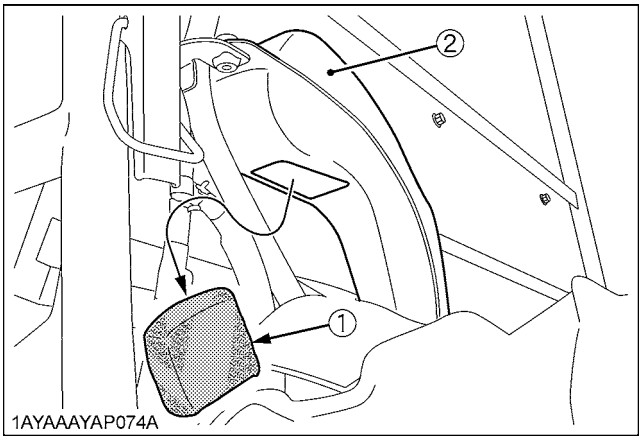

(1) Pre cleaner element
(2) Intake air line

2. Wash the pre cleaner in warm water with detergent.
   Rinse the pre cleaner thoroughly until all traces of detergent are eliminated.
   Squeeze out excess water. Allow the pre cleaner to air dry.
3. Reinstall the pre cleaner.

■Adjusting Alternator Drive Belt Tension

CAUTION

To avoid personal injury:

- **Be sure to stop the engine before checking belt tension.**
- **Allow the engine to cool down sufficiently before adjustment.**

[If equipped with the belt cover with rubber checking belt cover; the first 2 digits of the engine serial number are other than 8L, 8N, and 8Q.]

◆ **Checking procedure**

1. Park the vehicle on a flat surface.
2. Stop the engine and remove the key.
3. Move the checking belt cover to the direction of the arrow in the figure (1).
4. First of all, apply finger pressure of 98N (10 kgf, 22 lbs.) to the belt at the center of the checking belt window as shown in the figure (2).
5. Repeat step 4. to measure the belt tension.
6. If the deflection of the belt is over the prescribed value, the alternator drive belt should be adjusted.
7. Replace the alternator drive belt if it is damaged. Consult your local KUBOTA dealer.
8. Make sure to set the checking belt cover again in place after checking.

Belt type	A type belt (22 in.)
Limited deflection of the belt at the center of the checking belt window	approx. 10.5 mm (0.41 in.)

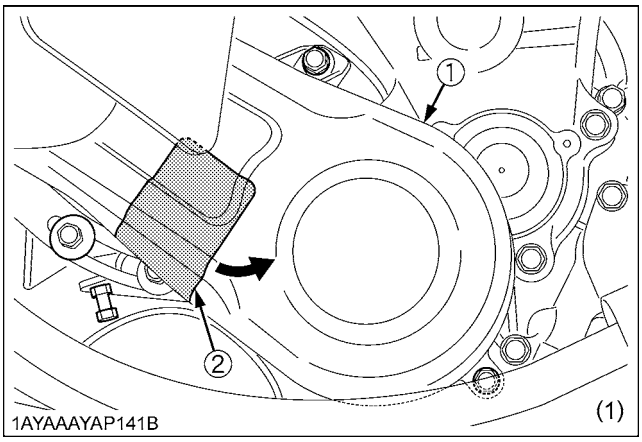

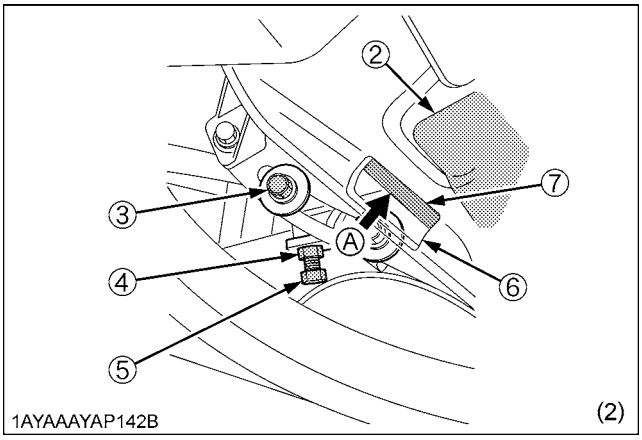

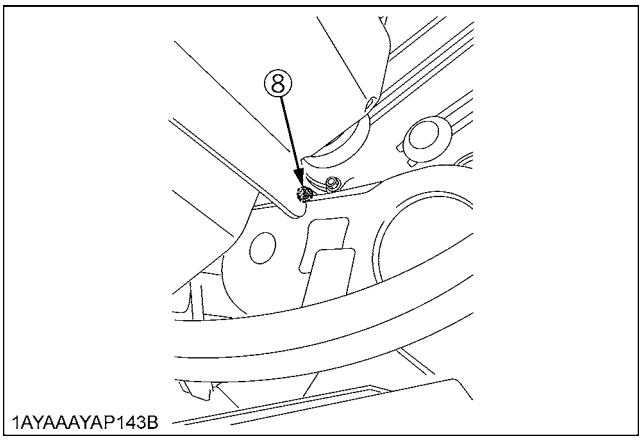

(1) Belt cover
(2) Checking belt cover
(3) M8 bolt
(4) Lock nut
(A) Finger pressure of 98N (10 kgf, 22 lbs.)
(5) Adjusting bolt
(6) Checking belt window
(7) Alternator drive belt
(8) M10 bolt

◆ **Adjusting procedure**

1. Loosen the lock nut.
2. Loosen the M8 bolt.
3. Loosen the M10 bolt slightly (approx. 5 degrees).
4. Adjust the alternator drive belt tension by fastening the adjusting bolt until the deflection of the belt is set within acceptable limits (approx. 7.5 mm).

Proper alternator drive belt tension	The belt should deflect approx. 7.5 mm (0.30 in.) when the belt (7) at the center of the checking belt window is depressed with finger pressure of 98 N (10 kgf, 22 lbs.).

5. Fasten the M10 bolt.
6. Check that the deflection of the belt at the center of the checking belt window is proper as the fourth step of the checking procedure.

IMPORTANT :
- Make sure to check the deflection of the belt after fastening the M10 bolt.

7. If the deflection of the belt is incorrect, restart the work from the third step of the adjusting procedure.
8. Fasten the M8 bolt.
9. Fix the lock nut.

[If equipped with the belt cover with no checking belt cover; the first 2 digits of the engine serial number are 8L, 8N, or 8Q.]

◆ **Checking procedure**
1. Park the vehicle on a flat surface.
2. Stop the engine and remove the key.
3. Remove three M6 bolts, and then remove the belt cover.
4. First of all, apply finger pressure of 98N (10 kgf, 22 lbs.) to the center of the belt between pulleys as shown in the figure.
5. Repeat step 4. to measure the belt tension.
6. If the deflection of the belt is over the prescribed value, the alternator drive belt should be adjusted.
7. Replace the alternator drive belt if it is damaged.
8. Make sure to set the belt cover again in place with the M6 bolts after checking.

Belt type	FM type belt (22.5 in.)
Limited deflection of the belt (6) at the center of the belt between pulleys	approx. 12 mm (0.47 in.)

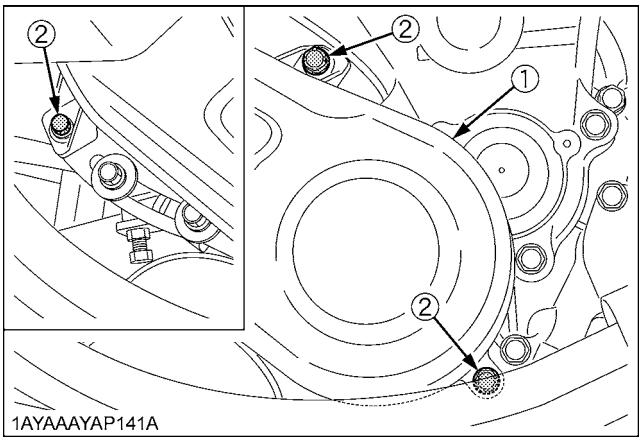

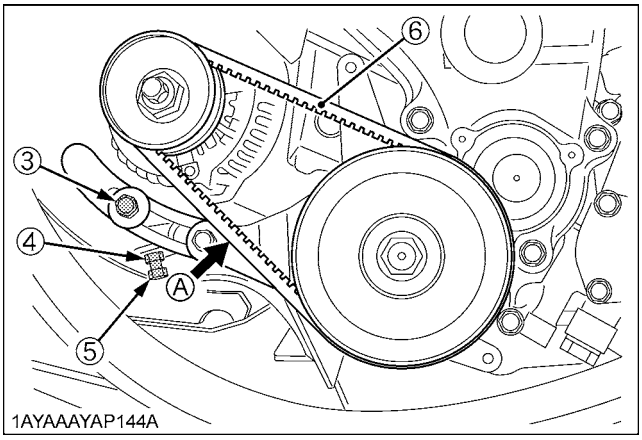

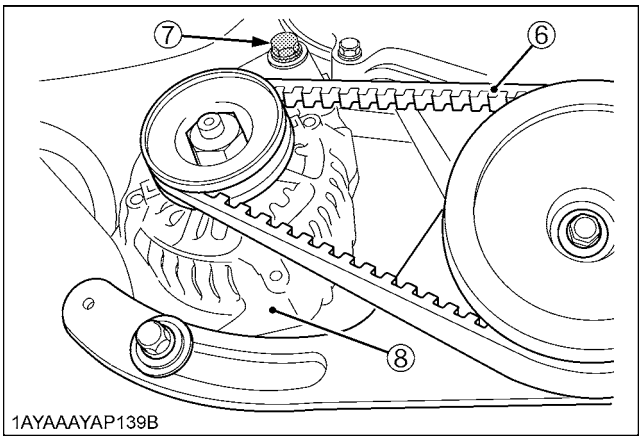

(1) Belt cover
(2) M6 bolt
(3) M8 bolt
(4) Lock nut
(A) Finger pressure of 98N (10 kgf, 22 lbs.)
(5) Adjusting bolt
(6) Alternator drive belt
(7) M10 bolt
(8) Alternator

◆ **Adjusting procedure**
1. Loosen the lock nut.
2. Loosen the M8 bolt.
3. Loosen the M10 bolt slightly (approx. 5 degrees).
4. Adjust the alternator drive belt tension by fastening the adjusting bolt until the deflection of the belt is set within acceptable limits (approx. 10 mm).

Proper alternator drive belt tension	The belt should deflect approx. 10 mm (0.39 in.) when the center of the belt between pulleys is depressed with finger pressure of 98 N (10 kgf, 22 lbs.).

5. Fasten the M10 bolt.
6. Check that the deflection of the center of the belt between pulleys is proper as the fourth step of the checking procedure.

IMPORTANT :
- Make sure to check the deflection of the belt after fastening the M10 bolt.

7. If the deflection of the belt is incorrect, restart the work from the third step of the adjusting procedure.
8. Fasten the M8 bolt.
9. Fix the lock nut.

■Checking Fuel Line

CAUTION

To avoid personal injury:
- **Be sure to stop the engine and remove the key when attempting to make the following checks and changes.**
- **Never fail to check the fuel lines periodically. The fuel lines are subject to wear and aging. Fuel may leak out onto the running engine, causing a fire.**

The fuel line connections should be checked annually or every 100 service hours, whichever comes first.
1. Park the vehicle on a flat surface and raise the cargo bed.
2. The fuel line is made of rubber and ages regardless of service period.
3. If the fuel line and clamps are found to be damaged or deteriorated, replace them.

IMPORTANT :
- When the fuel line is disconnected for maintenance or repair, close both ends of the fuel line with a piece of clean cloth or paper to prevent dust and dirt from entering. In addition, particular care must be taken not to admit dust and dirt into the fuel pump. Entrance of even a small amount of dust or dirt cause premature wear and malfunction of the fuel pump and injector components.

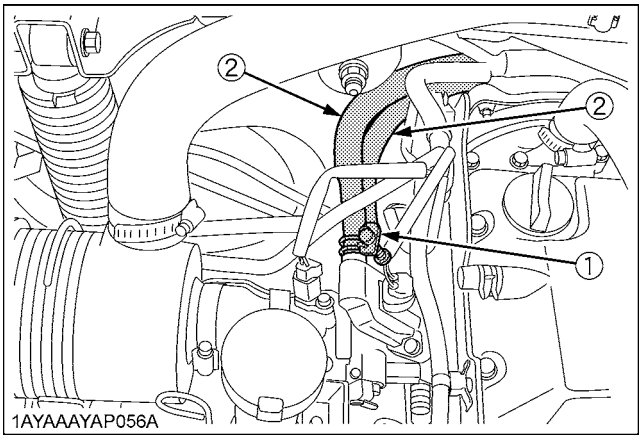

(1) Hose clamp
(2) Fuel line

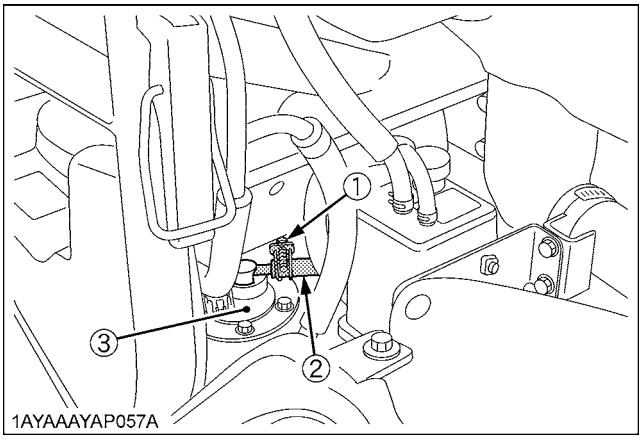

(1) Hose clamp
(2) Fuel line
(3) Fuel pump with filter

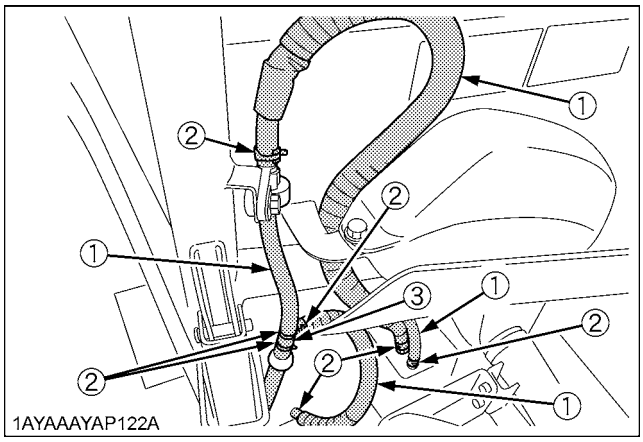

(1) Fuel line
(2) Hose clamp
(3) Three way connector

■Checking Battery Condition

DANGER

To avoid the possibility of battery explosion:
For the refillable type battery, follow the instructions below.

- **Do not use or charge the refillable type battery if the fluid level is below the LOWER (lower limit level) mark. Otherwise, the battery component parts may prematurely deteriorate, which may shorten the battery's service life or cause an explosion. Check the fluid level regularly and add distilled water as required so that the fluid level is between the UPPER and LOWER levels.**

CAUTION

To avoid personal injury:

- **Never remove the vent caps while the engine is running.**
- **Keep electrolyte away from eyes, hands and clothes. If you are spattered with it, wash it away completely with water immediately and get medical attention.**
- **Wear eye protection and rubber gloves when working around the battery.**

The factory-installed battery is non-refillable type.
If the battery is weak, charge the battery or replace it with new one.

◆ Battery Charging

CAUTION

To avoid personal injury:

- **When the battery is being activated, hydrogen and oxygen gases in the battery are extremely explosive. Keep open sparks and flames away from the battery at all times, especially when charging the battery.**
- **When disconnecting the cable from the battery, start with the negative terminal first. When connecting the cable to the battery, start with the positive terminal first.**
- **Never check battery charge by placing a metal object across the posts.**
  Use a voltmeter or hydrometer.

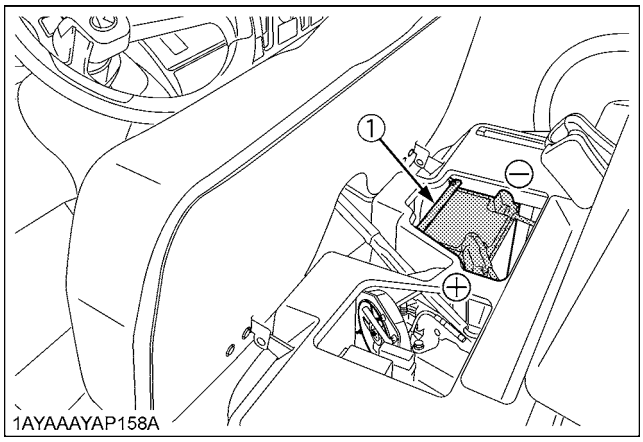

(1) Battery

1. To slow charge the battery, connect the battery positive terminal to the charger positive terminal and the negative to the negative, then recharge in the standard fashion.
2. A boost charge is only for emergencies. It will partially charge the battery at a high rate and in a short time.
   When using a boost-charged battery, it is necessary to recharge the battery as early as possible.
   Failure to do this will shorten the battery's service life.
3. When exchanging an old battery for a new one, use battery of equal specification shown in table below.

Battery TYPE	Volts (V)	Capacity at 20 hrs (A.H.)	Reserve Capacity (min)	Cold Cranking Amps
426 MF	12	32	55	450

◆ **Direction for Storage**

1. When storing the vehicle for a long period, remove the battery from vehicle, adjust the electrolyte to the proper level (refillable type only) and store in a dry place out of direct sunlight.
2. The battery self-discharges while it is stored.
   Recharge it once every 3 months in hot seasons and once every 6 months in cold seasons.

■Adjusting Toe-in

Proper toe-in	0 to 20 mm (0 to 0.79 in.)

1. Park vehicle on a flat place.
2. Turn steering wheel so front wheels are in the straight ahead position.
3. Lock the park brake and stop the engine.
4. Measure distance between tire beads at front of tire, at hub height.
5. Measure distance between tire beads at rear of tire, at hub height.
6. Front distance should be shorter than rear distance. If not, adjust tie rod length.

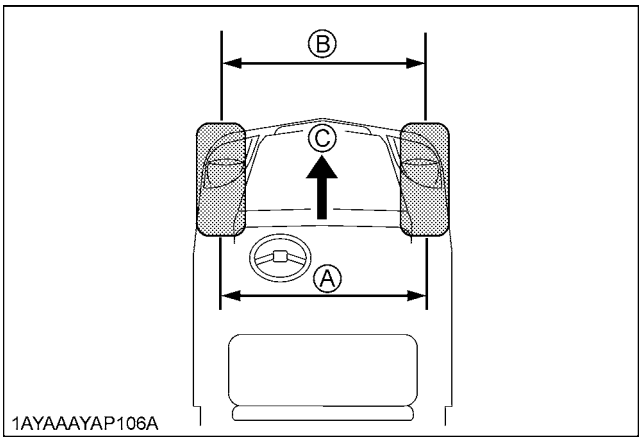

(A) Wheel - to - wheel distance at rear
(B) Wheel - to - wheel distance at front
(C) "FRONT"

◆ **Adjusting procedures**

1. Loosen the lock nut and turn the tie rod to adjust the rod length until the proper toe-in measurement is obtained.
2. Retighten the lock nut.

NOTE :

- Tightening torque:
  74.0 to 84.0 N-m
  (7.6 to 8.5 kgf-m)
  (55 to 61 lbf-ft)

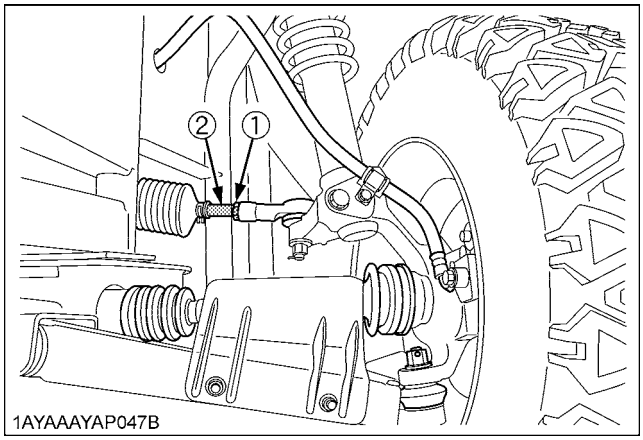

(1) Lock nuts
(2) Tie-rod

IMPORTANT :

- Keep the length of the left and right tie-rod equal.

■Cleaning Spark Arrester

CAUTION

To avoid personal injury:

- **After operating the engine, do not touch the muffler, exhaust pipe, or spark arrester until they have had sufficient time to cool.**

This screen type spark arrester was examined, tested, and qualified in accordance with the USDA Forest Service Standard 5100-1c.

◆ **Maintenance and cleanout procedure**

The screen type spark arrester should be removed, cleaned, and inspected after every 100 hours of use.

1. The spark arrester is located inside the end of the exhaust pipe, and is fastened with 2 bolts.
2. Unfasten the bolt and remove the spark arrester.
3. Shake loosened particles out of the screen assembly and lightly clean the screen with a wire brush. Soak in solvent and again clean with wire brush if necessary.
4. If any breaks in the screen or weldments are discovered, the assembly must be replaced.
5. Return the spark arrester to the exhaust outlet, align the bolt holes and refasten the bolt.

IMPORTANT :

- USDA approval requires clearance between spark arrester sleeve and exhaust pipe to be no larger than 0.023" (0.584 mm).

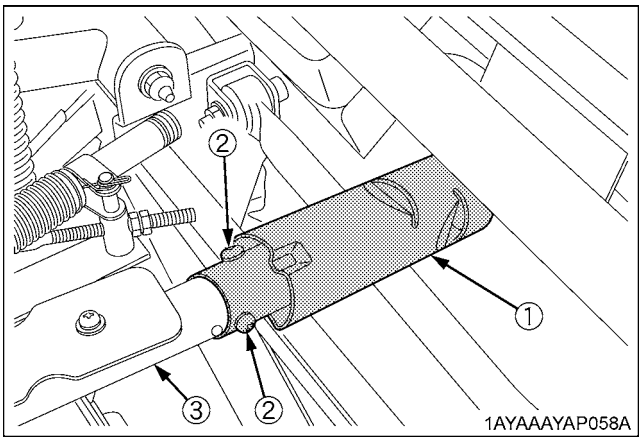

(1) Spark arrester
(2) Bolt
(3) Muffler

EVERY 200 HOURS

■Adjusting Parking Brake Lever

The parking brake should be adjusted when the parking brake lever reaches 8 to 12 notches and will not hold the vehicle in place.
Consult your local KUBOTA dealer.

◆ Adjusting procedure

1. Park the vehicle on a firm, flat and level surface, and shut off the engine and remove the key.
2. Release the parking brake.
3. Loosen the lock nut, and adjust the cable wire length.
4. Pull the parking brake lever one notch, and make sure the vehicle does not roll easily by hand.
5. Release the parking brake, and make sure the vehicle rolls easily by hand.
6. Tighten the lock nut.

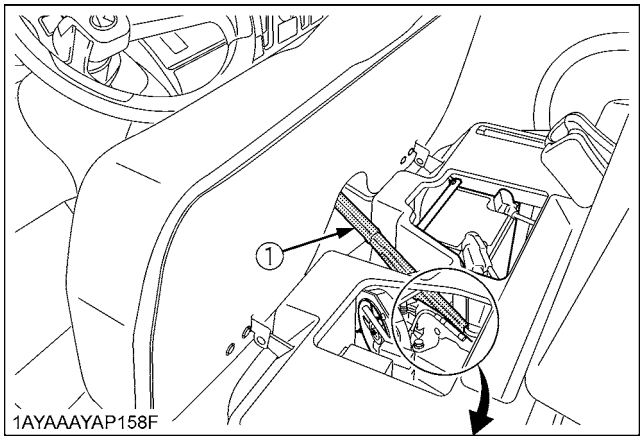

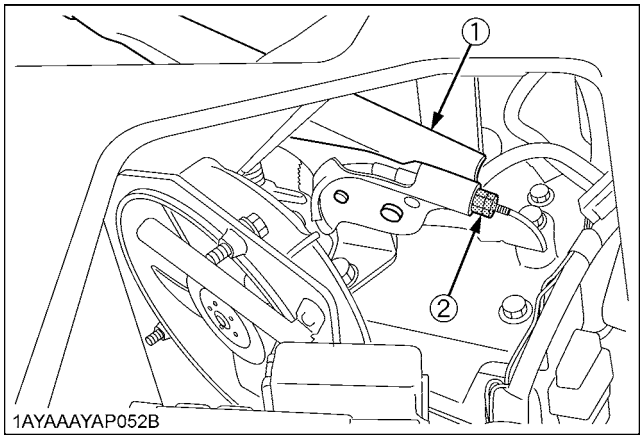

(1) Parking brake lever
(2) Lock nut

■Replacing Engine Oil Filter

CAUTION

To avoid personal injury:

- **Be sure to stop the engine before changing the oil filter cartridge.**
- **Allow engine to cool down sufficiently, oil can be hot and can burn.**

1. Park the vehicle on a flat surface and raise the cargo bed. Shut off the engine and remove the key.
2. Remove the oil filter.
3. Put a film of clean engine oil on the rubber seal of the new filter.
4. Tighten the filter quickly until it contacts the mounting surface.
   Tighten filter by hand an additional 1/2 turn only.
5. After the new filter has been replaced, the engine oil normally decreases a little. Make sure that the engine oil does not leak through the seal and be sure to check the oil level on the dipstick. Then, replenish the engine oil up to the prescribed level.

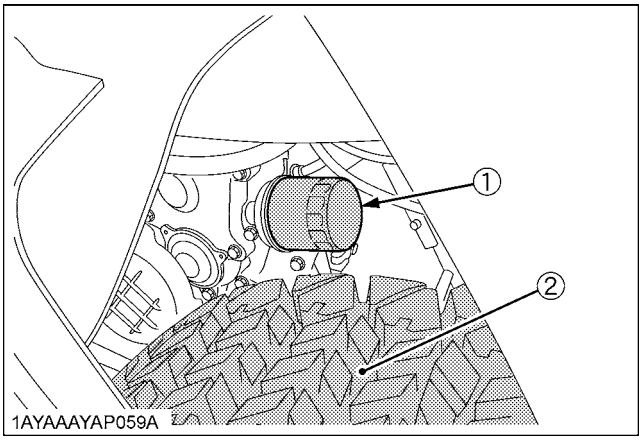

(1) Engine oil filter
(2) Left rear tire

IMPORTANT :

- To prevent serious damage to the engine, use only a KUBOTA genuine filter.

■Changing Engine Oil

CAUTION

To avoid personal injury:

- **Be sure to stop the engine before changing the oil.**
- **Allow engine to cool down sufficiently, oil can be hot and can burn.**

1. Park the vehicle on a flat surface and raise the cargo bed. Shut off the engine and remove the key.
2. To drain the used oil, remove the drain plug at the bottom of the engine and completely drain the oil into an oil pan.
   All the used oil can be drained out easily when the engine is still warm.
3. After draining, reinstall the drain plug.
4. Fill with the new oil up to the upper notch on the dipstick.
   (See "LUBRICANTS, FUEL AND COOLANT" in "MAINTENANCE" section.)

Oil capacity	[Filter exchanged] 1.35 L (1.43 U.S.qts.) [Filter non-exchanged] 1.2 L (1.27 U.S.qts.)

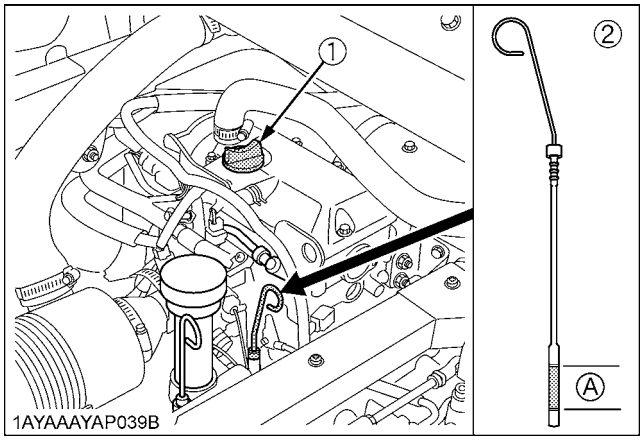

(1) Oil inlet (A) Oil level is acceptable within this range
(2) Dipstick

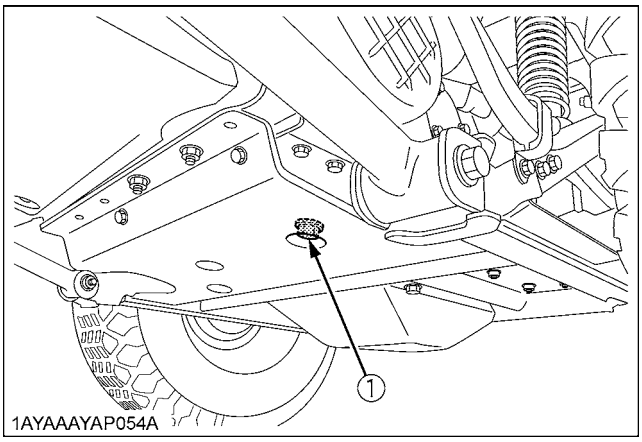

(1) Drain plug

■Cleaning Radiator Cooling Fins

CAUTION

To avoid personal injury:

- **Compressed air can cause debris to fly a long distance.**
- **Clear work area of bystanders.**
- **Wear eye protection when using compressed air for cleaning purposes.**
- **Reduce compressed air pressure to 210 kPa (2.1 kgf/cm², 30psi)**

1. Park the vehicle on a flat surface and raise the seat.
2. Remove the radiator maintenance cover.

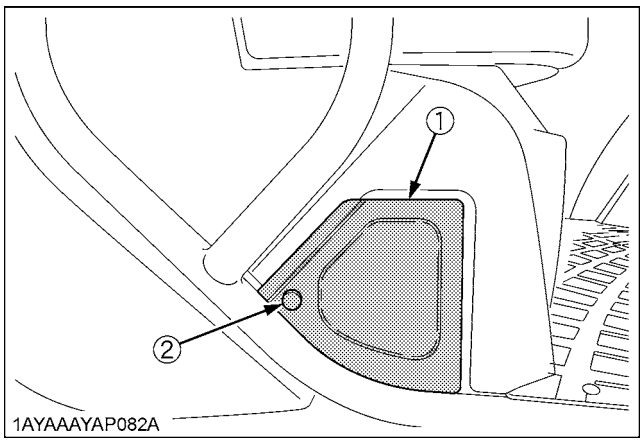

(1) Radiator maintenance cover
(2) Knob bolt

3. Detach the radiator screen.

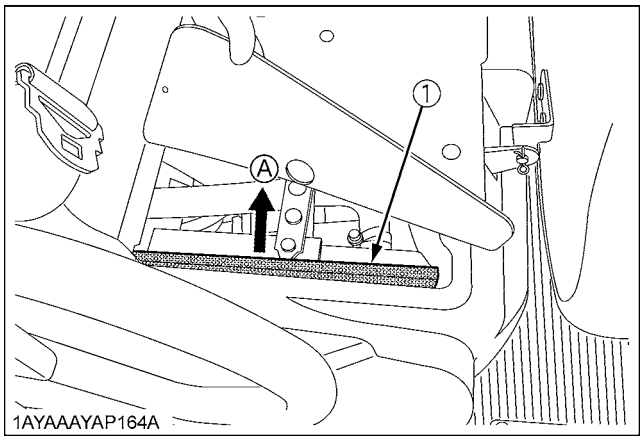

(1) Radiator screen *(A) "DETACH"*

4. Remove all dirt and debris from radiator fins and fan shroud using compressed air or water.
   Flow of compressed air or water should be from the back to the front as shown in the figures.

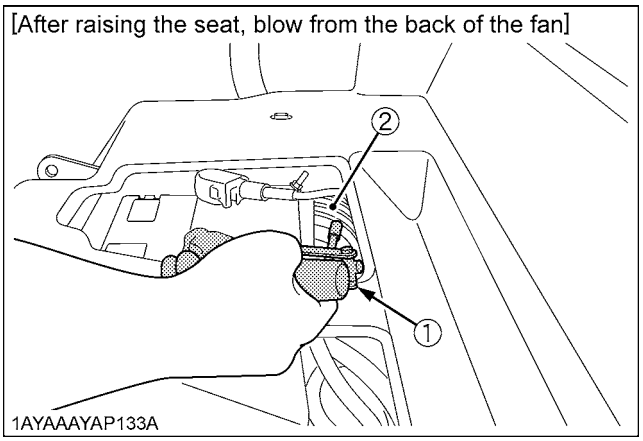

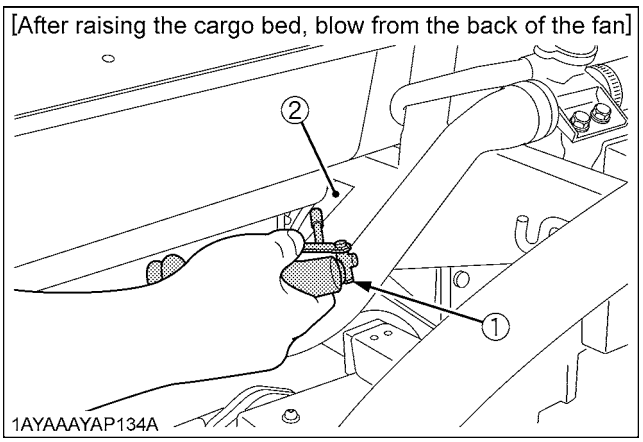

(1) Air blow
(2) Fan

5. Reinstall the radiator screen and the maintenance cover.

■Replacing Transmission Oil Filter

CAUTION

To avoid personal injury:

- **Be sure to stop the engine before changing the oil filter cartridge.**
- **Allow engine to cool down sufficiently, oil can be hot and can burn.**

1. Remove the drain plug at the bottom of the transmission case and drain the oil completely into the oil pan.
2. Check the rubber washer on the drain plug. Replace it if missing or in poor condition.
3. After draining, reinstall the drain plug.
4. Remove the oil filters.
5. Put a film of clean transmission oil on the rubber seal of the new filter.
6. Quickly tighten the filter until it contacts the mounting surface, then, with a filter wrench, tighten it an additional 2/3 turn only.
7. After the new filter has been replaced, fill the transmission oil up to the upper notch on the dipstick.
8. After running the engine for a few minutes, stop the engine and check the oil level again, add oil to the prescribed level.
9. Make sure that the transmission fluid doesn't leak past the seal on the filters.

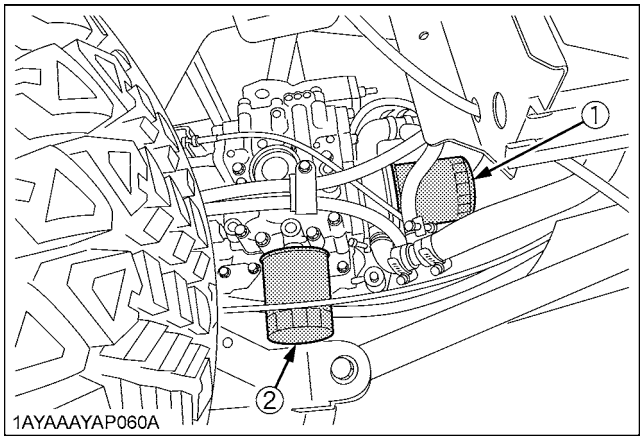

(1) Transmission oil filter (HST) (Yellow color)
(2) Transmission oil filter (Suction) (Orange color)

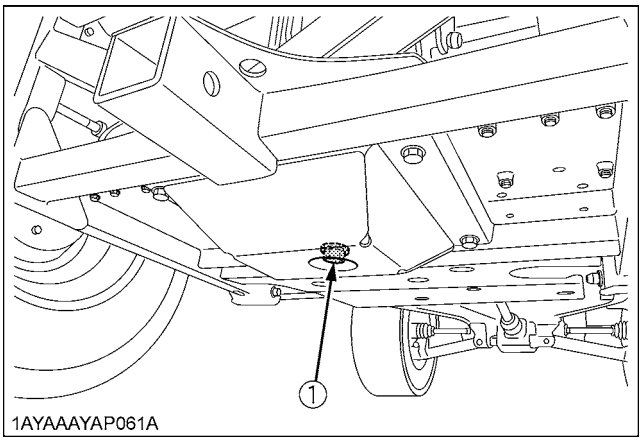

(1) Drain plug

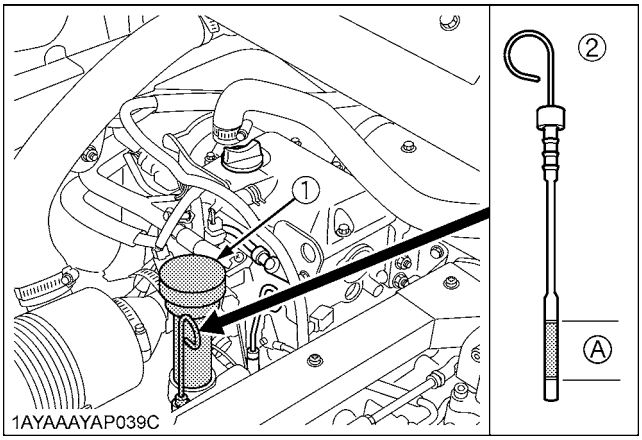

(1) Oil inlet
(2) Dipstick
(A) Oil level is acceptable within this range

IMPORTANT :

- To prevent serious damage to the transmission, use only a KUBOTA genuine filter.

■Checking Spark Plug Condition & Gap

Remove the spark plugs, check condition, and reset the gap or replace with new plugs as necessary.

1. Raise the cargo bed.
2. Before removing spark plugs, clean the area around the base of the plug to keep dirt and debris out of the engine.
3. Remove the spark plug wires from spark plugs.
4. Use a spark plug wrench to remove the spark plugs.
5. Remove plugs and check its condition.
   Replace the plug if worn or reuse is questionable.
6. Inspect spark plugs for cracked porcelain, pitted electrodes, or other wear and damage. Replace the spark plug if necessary.

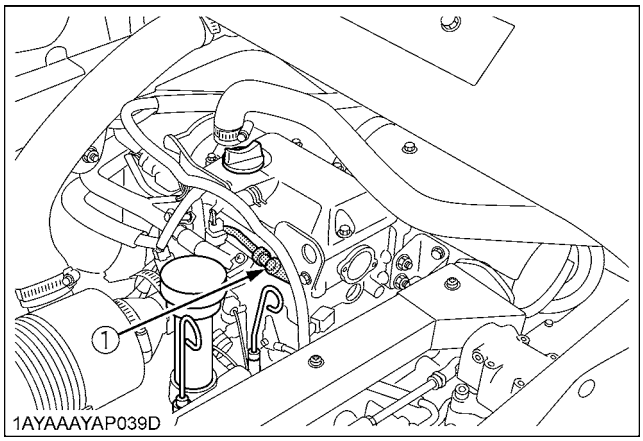

(1) Spark plug

NOTE :

- Do not clean the spark plug in a machine using abrasive grit. Some grit could remain in the spark plug and enter the engine causing extensive wear and damage.

Recommended spark plug	NGK BKR4E

7. Check the gap using a wire feeler gauge. Adjust the gap from 0.6 to 0.7 mm (0.024 to 0.028 in.) by carefully bending the ground electrode.

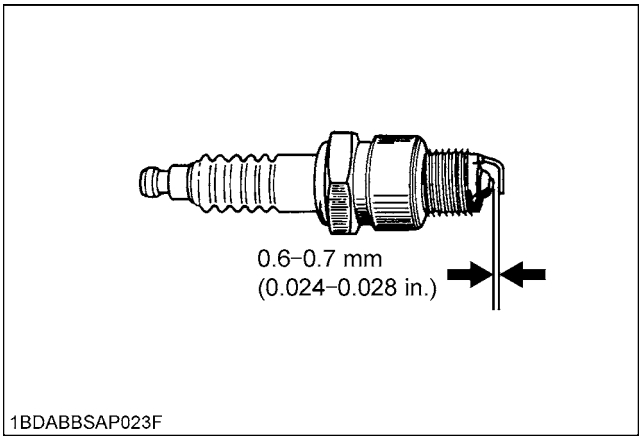

8. Reinstall the spark plug into the cylinder head.

Tightening torque (initial)	12 to 15 N-m (8.9 to 11 lbf-ft)
Retightening torque	23 to 27 N-m (17 to 19 lbf-ft)

■Checking Brake Pedal

CAUTION

To avoid personal injury:

- **Stop the engine and chock the wheels before checking brake pedal.**
- **If movement is outside of the specifications, contact your local KUBOTA Dealer for adjusting the brake.**

◆ Checking the brake pedal free travel

Proper brake pedal free travel	7 to 14 mm (0.3 to 0.6 in.) on the pedal

1. Release the parking brake.
2. Slightly depress the brake pedal and measure free travel at the top of the pedal stroke.
3. If brake pedal free travel is outside of the specifications, contact your local KUBOTA Dealer for adjusting the brake.

◆ Checking the brake pedal stroke

Pedal stroke	Less than 65 mm (2.56 in.) on the pedal

1. Release the parking brake.
2. Step on the pedal and measure the pedal stroke.
3. If brake pedal stroke is outside of the specifications, contact your local KUBOTA Dealer for adjusting the brake.

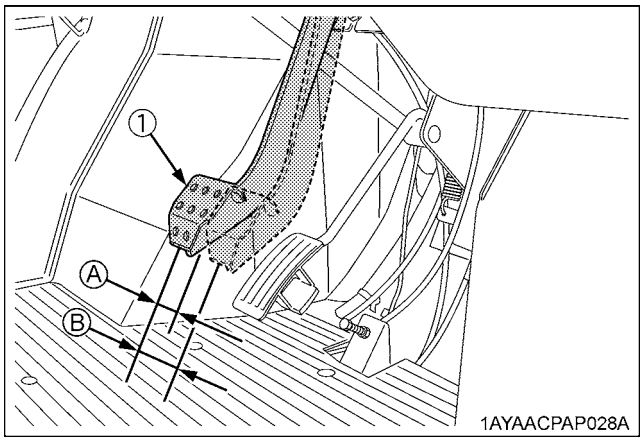

(1) Brake pedal
(A) "FREE TRAVEL"
(B) "PEDAL STROKE"

■Checking Brake Hose and Pipe

1. Check to see that brake hose and pipe are not swollen, hardened or cracked.
2. Check the brake hose and pipe joints for oil leaks.
3. If there is any abnormality, consult your local KUBOTA Dealer for this service.

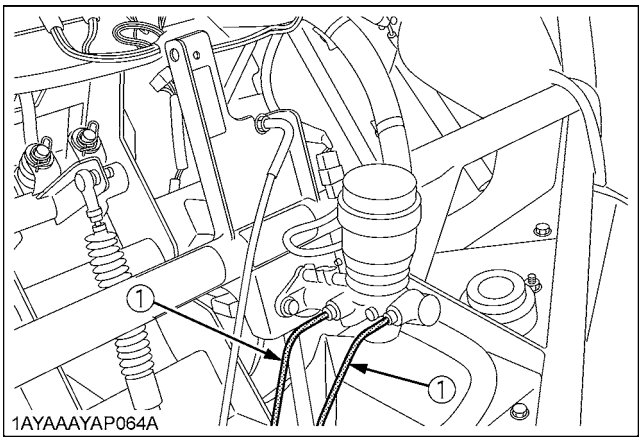

(1) Brake pipe

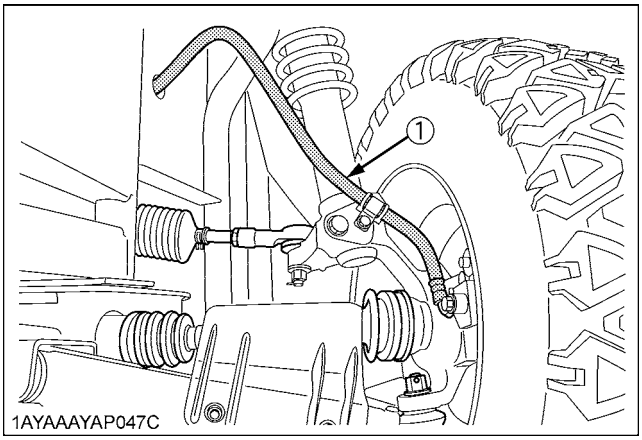

(1) Brake hose (Front)

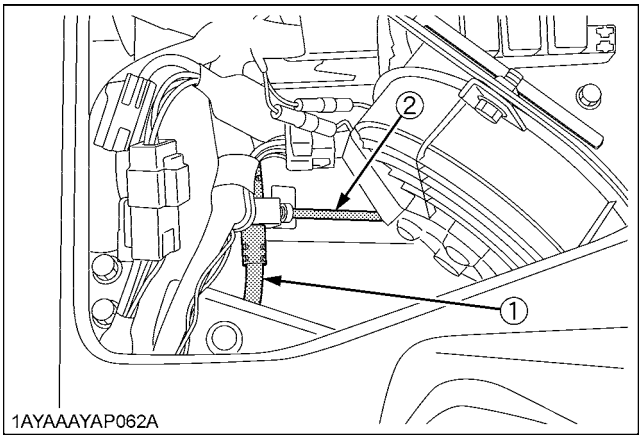

(1) Brake hose
(2) Brake pipe

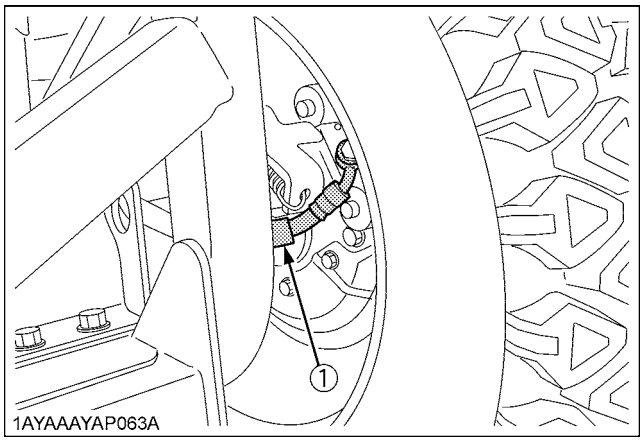

(1) Brake hose (Rear)

■Checking Brake Light Switch

1. Park the vehicle on a flat surface.
2. Step on the brake pedal to check if the brake light comes on.
3. If it does not, check the bulb or brake light switch.

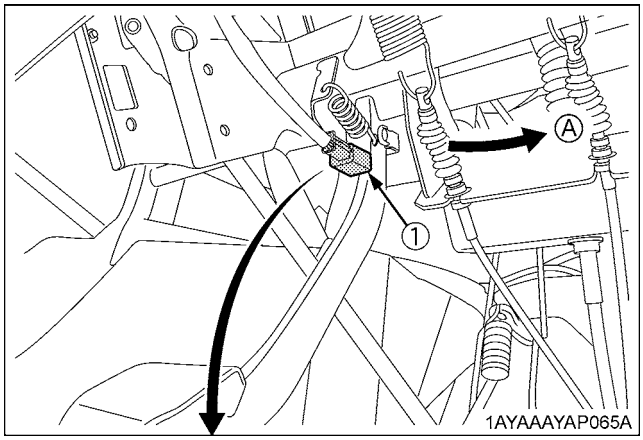

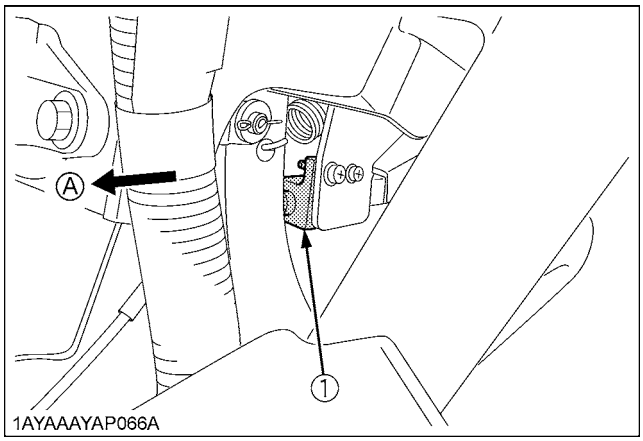

(1) Brake light switch *(A) "FRONT"*

■Checking Radiator Hose and Clamp

Park the vehicle on a flat surface and raise the cargo bed. Check to see if radiator hoses are properly fixed every 200 hours of operation or 6 months, whichever comes first.

1. If hose clamps are loose or water leaks, tighten bands securely.
2. Replace hoses and tighten hose clamps securely, if radiator hoses are swollen, hardened or cracked.

Replace hoses and hose clamps every 2 years or earlier if checked and found that hoses are swollen, hardened or cracked.

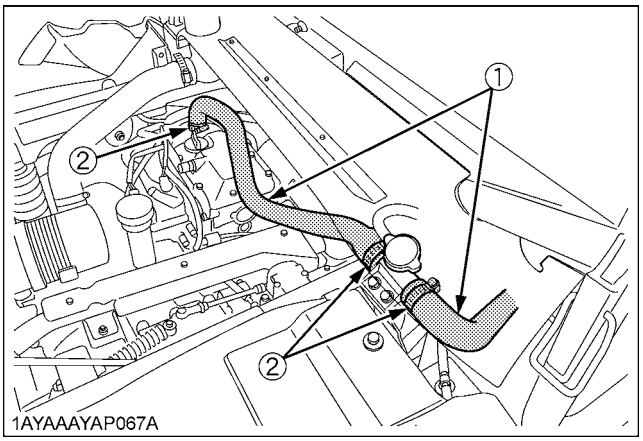

(1) Radiator hoses
(2) Clamp bands

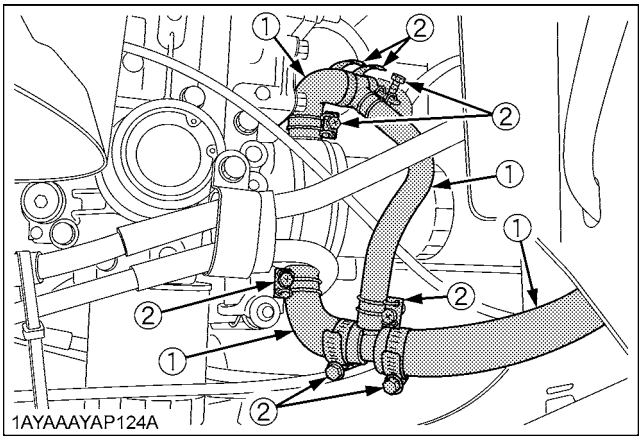

(1) Radiator hoses
(2) Clamp bands

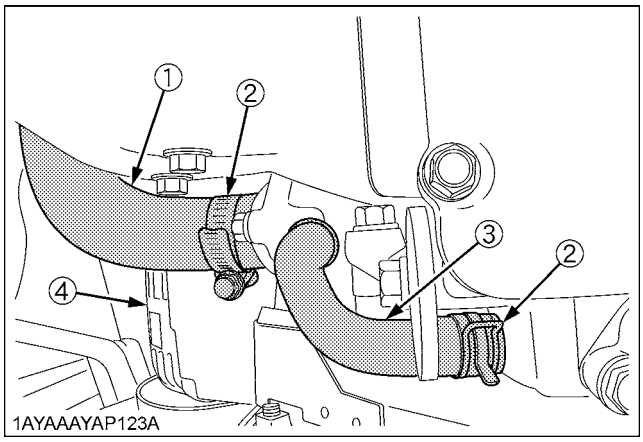

(1) Radiator hose
(2) Clamp bands
(3) Water return hose
(4) Alternator

◆ **Precaution at Overheating**

Take the following actions in the event the coolant temperature is close to or more than the boiling point, which is called "Overheating".

1. Stop the vehicle operation in a safe place and keep the engine unloaded idling.
2. Don't stop the engine suddenly, but stop it after about 5 minutes of unloaded idling.
3. Keep yourself well away from the vehicle for at least 10 minutes or while the steam is blowing out.
4. Check to see if there is no danger such as burning, get rid of the causes of overheating according to the "TROUBLESHOOTING" section of this manual, and then start the engine again.

■Checking Intake Air Line

1. Check to see if the hoses and hose clamps are tight and not damaged.
2. If hoses and clamps are found to be worn or damaged, replace or repair them at once.

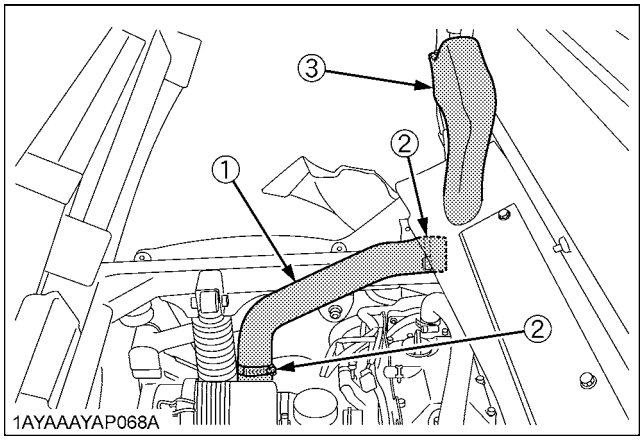

(1) Hose
(2) Hose clamp
(3) Intake air line

EVERY 300 HOURS

■Checking Tire

1. Check to see if tires are not damaged.
2. If the tires are cracked, bulged, or cut, or they are worn out, replace or repair them at once.

◆ **Tire Tread Depth**

Always replace the tires when the tread depth is worn to minimum allowable.

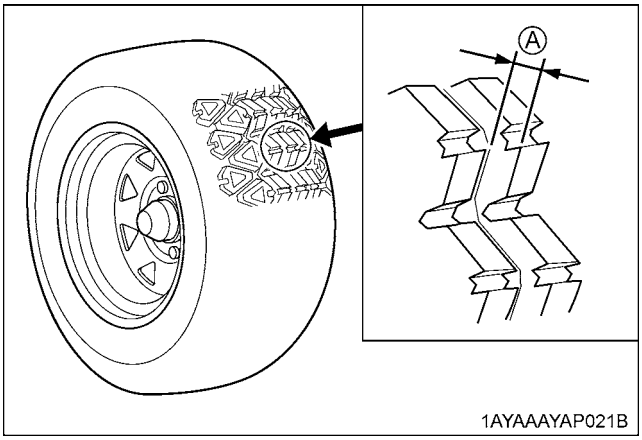

(A) 3 mm (0.12 in.)

EVERY 400 HOURS

■Changing Transmission Oil

CAUTION

To avoid personal injury:

- **Allow engine to cool down sufficiently, oil can be hot and can burn.**

1. Park the vehicle on a flat surface and raise the cargo bed. Shut off the engine and remove the key.
2. To drain the used oil, remove the drain plug at the bottom of the transmission case and drain the oil completely into the oil pan.
3. Check the rubber washer on the drain plug. Replace it if missing or in poor condition.
4. After draining, reinstall the drain plug.
5. Fill with the new KUBOTA SUPER UDT fluid up to the upper notch on the dipstick.
   (See "LUBRICANTS, FUEL AND COOLANT" in "MAINTENANCE" section.)
6. After running the engine for a few minutes, stop the engine and check the oil level again; add oil to prescribed level.

Oil Capacity	8.5 L (2.2 U.S.gals.)

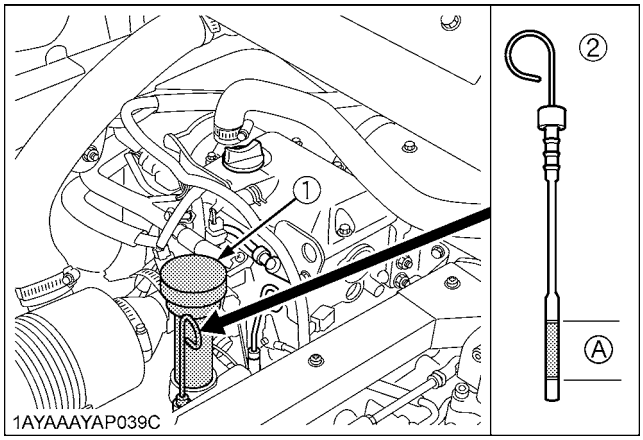

(1) Oil inlet *(A) Oil level is acceptable within this range*
(2) Dipstick

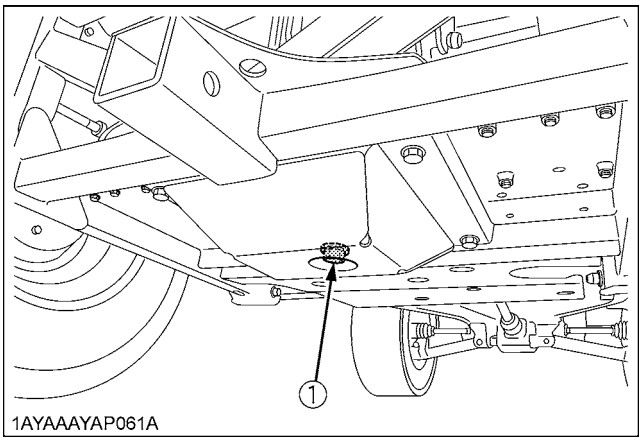

(1) Drain plug

IMPORTANT :

- Do not operate the vehicle immediately after changing the transmission fluid.
  Run the engine at medium speed for a few minutes to prevent damage to the transmission.

■Changing Front Axle Case Oil

1. Park the vehicle on a firm, flat and level surface.
2. To drain the used oil, remove the drain and filling plugs at the front axle case and drain the oil completely into the oil pan.
3. After draining, reinstall the drain plug.
4. Fill with the new oil up to the upper notch on the dipstick.
   (See "LUBRICANTS, FUEL AND COOLANT" in "MAINTENANCE" section.)
5. After filling, reinstall the filling plug.

Oil capacity	0.21 L (0.22 U.S.qts.)

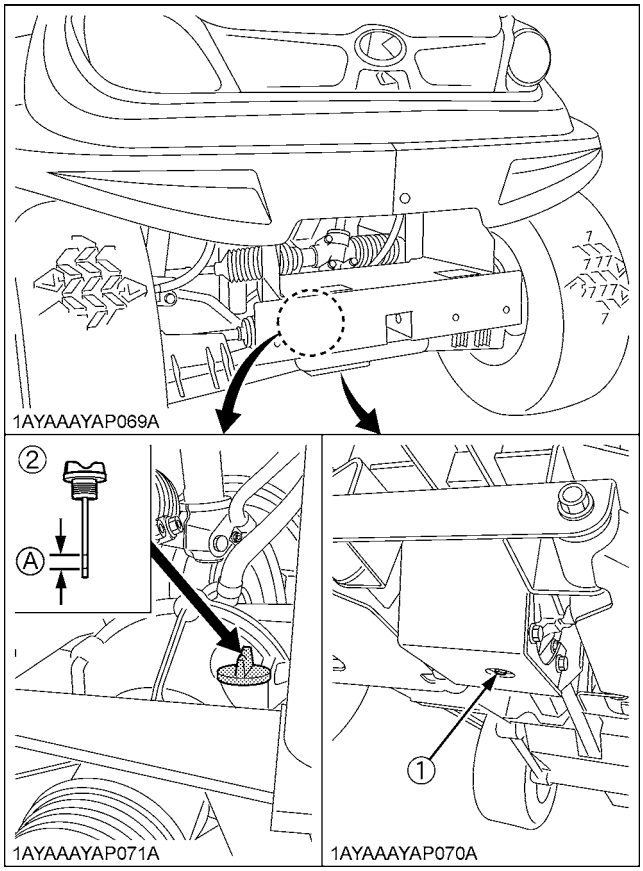

(1) Drain plug
(2) Filling plug with dipstick
(A) Oil level is acceptable within this range

EVERY 500 HOURS

■Adjusting Engine Valve Clearance

If you do not have the proper tools and/or are not mechanically proficient, consult your local KUBOTA Dealer for this service.

■Checking Engine Timing Belt

If you do not have the proper tools and/or are not mechanically proficient, consult your local KUBOTA Dealer for this service.

EVERY 1000 HOURS

■Replacing Engine Timing Belt

If you do not have the proper tools and/or are not mechanically proficient, consult your local KUBOTA Dealer for this service.

EVERY AFTER 1000 HOURS

■Cleaning Engine Combustion Chamber

If you do not have the proper tools and/or are not mechanically proficient, consult your local KUBOTA Dealer for this service.

EVERY 1 YEAR

■Replacing Air Cleaner Primary Element and Secondary Element

(See "Cleaning Air Cleaner Primary Element" in "EVERY 100 HOURS" in "PERIODIC SERVICE" section.)

■Replacing Pre Cleaner Element

(See "Cleaning Pre Cleaner Element" in "EVERY 100 HOURS" in "PERIODIC SERVICE" section.)

EVERY 2 YEARS

■Changing Brake Fluid

Consult your local KUBOTA Dealer for this service.
(See "Checking Brake Fluid Level" in "DAILY CHECK" in "PERIODIC SERVICE" section.)

■Flushing Cooling System and Changing Coolant

CAUTION

To avoid personal injury:

- **Do not remove the radiator cap while coolant is hot. When cool, slowly rotate cap to the first stop and allow sufficient time for excess pressure to escape before removing the cap completely.**

1. Stop the engine and let cool down.
2. Remove the radiator maintenance cover.
3. To drain the coolant, open the radiator drain plug and remove radiator cap. The radiator cap must be removed to completely drain the coolant.
4. After all coolant is drained, close the drain plug.
5. Fill with clean water and cooling system cleaner.
6. Follow directions of the cleaner instruction.
7. After flushing, fill with clean water and anti-freeze until the coolant level is just below the radiator cap.
   Install the radiator cap securely.
8. Fill with fresh water up to the "FULL" mark on the recovery tank.
9. Start and operate the engine for few minutes.
10. Stop the engine and let cool.
11. Check coolant level of recovery tank and add coolant if necessary.

Coolant capacity	1.8 L (1.9 U.S.qts.)

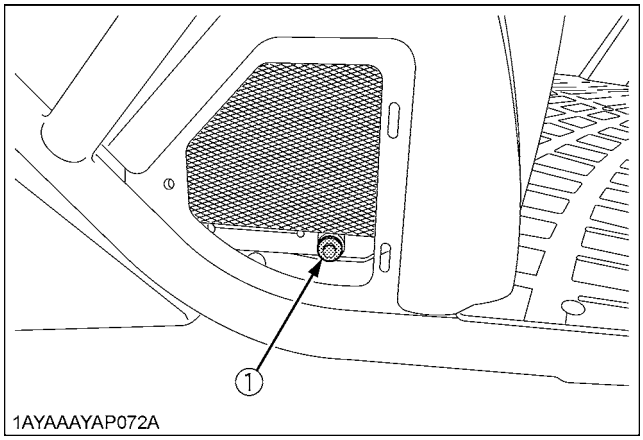

(1) Drain plug

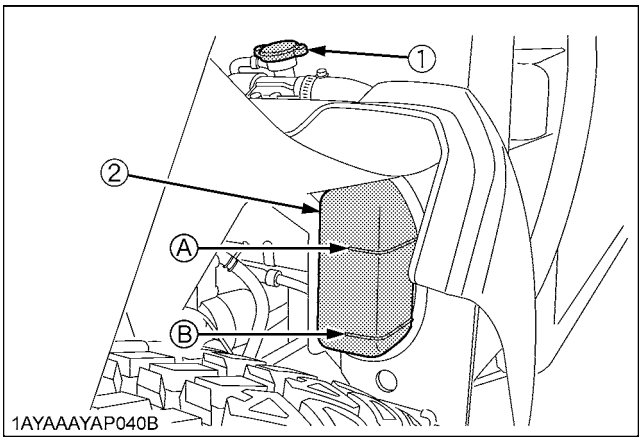

(1) Radiator cap *(A) "FULL"*
(2) Recovery tank *(B) "LOW"*

IMPORTANT :

- Do not start engine without coolant.
- Use clean, fresh water and anti-freeze to fill the radiator and recovery tank.
- When the anti-freeze is mixed with water, the antifreeze mixing ratio must be less than 50%.
- Securely tighten radiator cap. If the cap is loose or improperly fitted, water may leak out and the engine could overheat.

■Anti-Freeze

CAUTION

To avoid personal injury:

- **When using antifreeze, put on some protection such as rubber gloves. (Antifreeze contains poison.)**
- **If should drink antifreeze, throw up at once and take medical attention.**
- **When antifreeze comes in contact with the skin or clothing, wash it off immediately.**
- **Do not mix different types of Antifreeze.**
  The mixture can produce chemical reaction causing harmful substances.
- **Antifreeze is extremely flammable and explosive under certain conditions. Keep fire and children away from antifreeze.**
- **When draining fluids from the engine, place some container underneath the engine body.**
- **Do not pour waste onto the grounds, down a drain, or into any water source.**
- **Also, observe the relevant environmental protection regulations when disposing of antifreeze.**

If it freezes, coolant can damage the cylinders and radiator. If the ambient temperature falls below 0℃ (32℉) or before a long-term storage, let out cooling water completely, or mix fresh water with long-life coolant and fill the radiator and recovery tank with the mixture.

1. Long-life coolant (hereafter LLC) comes in several types. Use ethylene glycol (EG) type for this engine.
2. Before employing LLC-mixed cooling water, fill the radiator with fresh water and empty it again.
   Repeat this procedure 2 or 3 times to clean up the inside.
3. Mixing the LLC
   Put the LLC in cooling water in the percentage (%) for a target temperature. When mixing, stir it up well, and then fill into the radiator.
4. The procedure for the mixing of water and antifreeze differs according to the make of the antifreeze and the ambient temperature. Refer to SAE J1034 standard, more specifically also to SAE J814c.

IMPORTANT :

- When the antifreeze is mixed with water, the antifreeze mixing ratio must be less than 50%.

Vol % Anti-freeze	Freezing Point		Boiling Point*	
	℃	℉	℃	℉
40	-24	-12	106	222
50	-37	-34	108	226

* At 1.013 x 10^5 Pa (760 mmHg) pressure (atmospheric).

A higher boiling point is obtained by using a radiator pressure cap which permits the development of pressure within the cooling system.

5. Adding the LLC
   (1) Add only water if the mixture reduces in amount by evaporation.
   (2) If there is a mixture leak, add the LLC of the same manufacturer and type in the same mixture percentage.

   * Never add any long-life coolant of different manufacturer. (Different brands may have different additive components, and the engine may fail to perform as specified.)

6. When the LLC is mixed, do not employ any radiator cleaning agent. The LLC contains anticorrosive agent. If mixed with the cleaning agent, sludge may build up, adversely affecting the engine parts.
7. Kubota's genuine long-life coolant has a service life of 2 years. Be sure to change the coolant every 2 years.

NOTE :

- The above data represents industry standards that necessitate a minimum glycol content in the concentrated antifreeze.
- When the coolant level drops due to evaporation, add water only to keep the antifreeze mixing ratio less than 50%. In case of leakage, add antifreeze and water in the specified mixing ratio before filling into the radiator.

■Replacing Radiator Hose (Water pipes)

Replace the hoses and clamps.
(See "Checking Radiator Hose and Clamp" in "EVERY 200 HOURS" in "PERIODIC SERVICE" section.)

■Replacing Fuel Hose

Consult your local KUBOTA Dealer for this service.

■Replacing Brake Master Cylinder (Inner Parts)

Consult your local KUBOTA Dealer for this service.

■Replacing Intake Air Line

Consult your local KUBOTA Dealer for this service.

■Replacing Engine Breather Hose

Consult your local KUBOTA Dealer for this service.

EVERY 4 YEARS

■Replacing Brake Hose

Consult your local KUBOTA Dealer for this service.

SERVICE AS REQUIRED

■Checking Brake Pad

CAUTION

To avoid personal injury:

- **The machine can fall or slip from an unsafe device or supports.**
- **Use a safe lifting device rated for the load to be lifted.**
- **Lower the vehicle onto jack stands and block the wheels before servicing. (See "JACK-UP POINT" in "PERIODIC SERVICE" section.)**

1. Park the vehicle on a firm, flat and level surface.
2. Raise the vehicle with a safe devise and lower onto the jack or other stable supports. Block the wheels remaining on the ground to prevent the vehicle from moving.
3. Remove the wheel bolts and the tires.

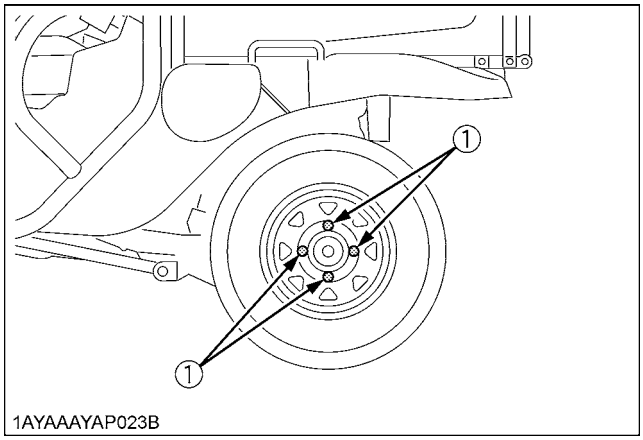

(1) Wheel bolts

4. Check the brake pads for wear or damage.
   Check the pad's thickness:
   Minimum thickness should be 1mm (3/64 inch). If below this or pad material is damaged, contact your local Kubota Dealer.

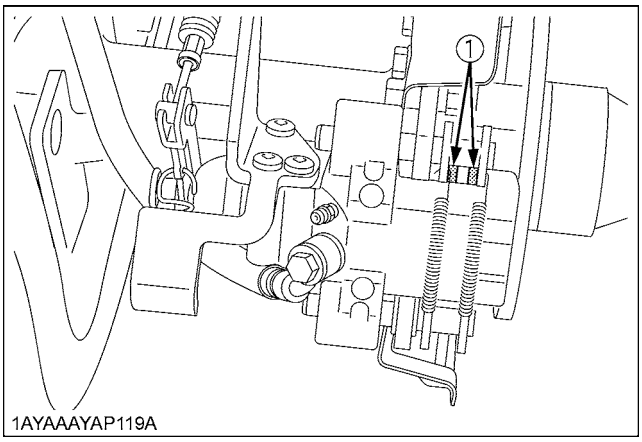

(1) Brake pad

5. Reinstall the tires with the valve stem to the outside.
6. Tighten the wheel bolts evenly in alternating sequence until snug.
7. Repeat the same procedure for remaining three tires.
8. Lower the vehicle completely to the ground.
9. Tighten the wheel bolts from 108.4 to 121.9 N-m (80 to 90 ft-lbs).

■Adjusting Parking Brake

For proper adjusting of the parking brake, consult your local KUBOTA Dealer.

■Adjusting Alternator Drive Belt Tension

For proper adjusting of the alternator drive belt, consult your local KUBOTA Dealer.

■Replacing Fuse

The vehicle electrical system is protected from potential damage by fuses.
A blown fuse indicates that there is an overload or short somewhere in the electrical system.
If any of the fuses should blow, replace with a new one of the same capacity.

IMPORTANT :
- Before replacing a blown fuse, determine why the fuse blew and make any necessary repairs. Failure to follow this procedure may result in serious damage to the vehicle electrical system. Consult your local KUBOTA Dealer for specific information dealing with electrical problems.

◆ Replacement procedure

1. Disconnect the negative cable of the battery.
2. Remove the cover and the fuse box cover.
3. Pull out the blown fuse using FUSE PULLER in the fuse box.
4. Insert a new fuse into the fuse box.
5. Install the fuse box cover.
6. Connect the negative battery cable.

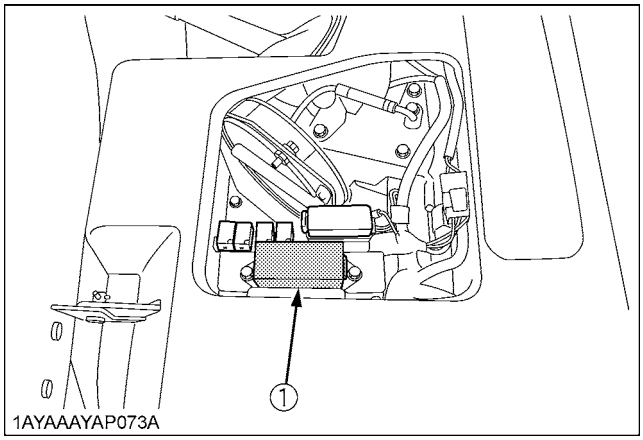

(1) Fuse box

◆ How to distinguish between the old and new type of the protected circuit

Fuse Label PART No.	K7311-6128-1	K7311-6121-1 or later
Harness PART No.	K7311-6120-4 or former	K7311-6120-5 or later
Protected circuit	OLD	NEW

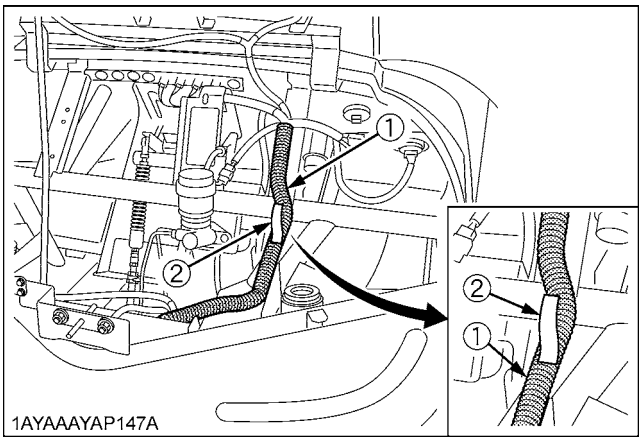

(1) Main harness
(2) Harness part number label

NOTE :
- Use the correct fuse label when replacing the fuse cover.

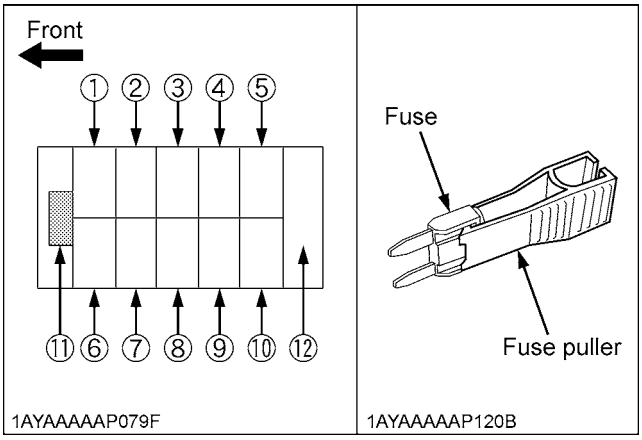

◆ Protected circuit

Fuse No.	Capacity (A)	Protected circuit (OLD)	Protected circuit (NEW)
1	15	Head lamp, Tail lamp, Panel	←
2	10	Eng. control, Fuel pump	Eng. control, Fuel pump, Fan motor relay
3	10	Cooling fan motor	←
4	20	Radiator Fan motor	←
5	15	(Hazard)	←
6	10	Alternator, Radiator fan relay, Cooling fan relay	Alternator, (Work light relay), (AUX (KEY ON))
7	5	Panel	←
8	10	12V DC output	←
9	15	Brake lamp, Horn	←
10	15	(Work light)	←
11	---	Fuse puller	←
12	5, 10, 15, 20	Spare	←

■Replacing Slow-Blow Fuses

The slow-blow fuses are intended to protect the electrical cabling. If any of them have blown out, be sure to pinpoint the cause. Never use any substitute, use only a KUBOTA genuine part.

◆ Replacement procedure

1. Disconnect the negative cable of the battery.
2. Remove the cover and the slow-blow fuse box cover.
3. Pull out the slow-blow fuse.
4. Insert a new slow-blow fuse into the slow-blow fuse box.
5. Install the slow-blow fuse box cover.
6. Connect the negative battery cable.

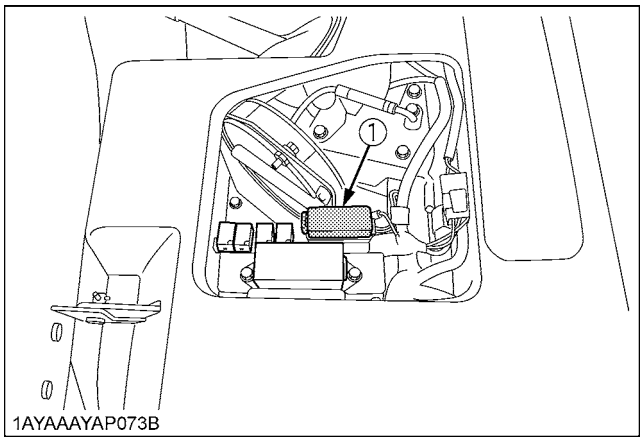

(1) Slow-blow fuse box

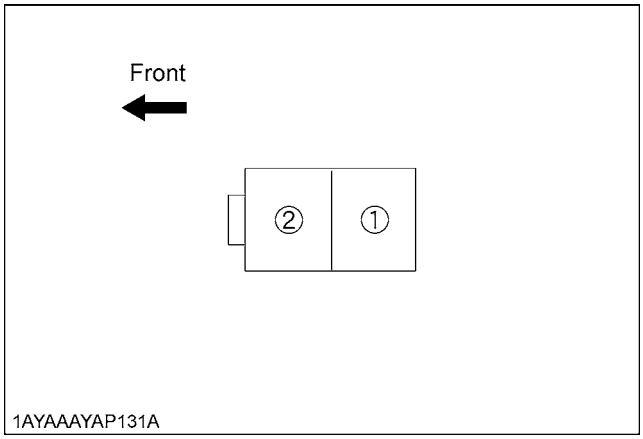

◆ Protected circuit

Fuse No.	Capacity (A)	Protected circuit
1	Slow-blow fuse (50)	Key switch
2	Slow-blow fuse (60)	Alternator

■Replacing Light Bulb

1. Head lights
   Take the bulb out of the light body and replace it with a new one.
2. Other lights
   Detach the lens and replace the bulb.

Light	Capacity
Head lights	27 W
Tail light	5 W
Brake light	21 W
Easy Checker(TM)	3.8 W (14V, 0.27A)
Instrument panel light	3.8 W (14V, 0.27A)

STORAGE

CAUTION

To avoid personal injury:

- **Do not clean the vehicle with engine running.**
- **To avoid the danger of exhaust fume poisoning, do not operate the engine in a closed building without proper ventilation.**
- **When storing, remove the key from the key switch to avoid unauthorized persons from operating the vehicle and getting injured.**

VEHICLE STORAGE

If you intend to store your vehicle for an extended period of time, follow the procedures outlined below.

These procedures will insure that the vehicle is ready to operate with minimum preparation when it is removed from storage.

1. Check the bolts and nuts for looseness, and tighten if necessary.
2. Apply grease to vehicle areas where bare metal will rust also to pivot areas.
3. Unload from cargo bed.
4. Inflate the tires to a pressure a little higher than usual.
5. Change the engine oil and run the engine to circulate oil throughout the engine block and internal moving parts for about 5 minutes.
6. With all implements lowered to the ground, coat any exposed hydraulic cylinder piston rods with grease (if equipped).
7. Remove the battery from the vehicle. Store the battery following the battery storage procedures.
   (See "Checking Battery Condition" in "EVERY 100 HOURS" in "PERIODIC SERVICE" section.)
8. Keep the vehicle in a dry place where the vehicle is sheltered from the elements. Cover the vehicle.
9. Store the vehicle indoors in a dry area that is protected from sunlight and excessive heat. If the vehicle must be stored outdoors, cover it with a waterproof tarpaulin.
   Put boards under the tires to keep dampness away from tire.
   Keep the tires out of direct sunlight and extreme heat.

IMPORTANT :

- When washing the vehicle, be sure to stop the engine. Allow sufficient time for the engine to cool before washing.
- Do not wash with a high-pressure car-washing machine.
- Cover the vehicle after the muffler and the engine have cooled down.

REMOVING THE VEHICLE FROM STORAGE

1. Check the tire air pressure and inflate the tires if they are low.
2. Install the battery. Before installing the battery, be sure it is fully charged.
3. Check the fan belt tension.
4. Check all fluid levels (engine oil, transmission oil, engine coolant and any attached implements).
5. Check the spark plug gap. Install and tighten plugs to the specified torque.
6. Start the engine. Observe all gauges. If all gauges are functioning properly and reading normal, move the vehicle outside. Once outside, park the vehicle and let the engine idle for at least 5 minutes. Shut the engine off and walk around vehicle and make a visual inspection looking for evidence of oil or water leaks.
7. With the engine fully warmed up, release the parking brake and test the brakes for proper adjustment as you move forward. Adjust the brakes as necessary.

TROUBLESHOOTING

ENGINE TROUBLESHOOTING

If something is wrong with the engine, refer to the table below for the cause and its corrective measure.

Trouble	Cause	Countermeasure
Engine is difficult to start or will not start.	● The range shift lever not in the proper position.	● Make sure the range shift lever is in "NEUTRAL" position.
	● Key switch is not in the proper position.	● Make sure key switch is in "ON" position.
	● No fuel.	● Replenish fuel.
	● Improper or stale fuel. (Fuel quality is poor.)	● Replace fuel and consult your KUBOTA Dealer.
	● Water or dirt in the fuel system.	● Replace fuel and consult your KUBOTA Dealer.
	● Fuel hose or fuel filter clogged or damaged.	● Clean or replace fuel lines, and consult your KUBOTA Dealer.
	● Air cleaner is clogged.	● Clean or replace the air cleaner element.
	● Spark plug defective.	● Adjust the spark plug gap or replace the spark plug.
		● Check the spark plug wire connection.
	● Fuse is blown.	● Replace the fuse.
	● Engine oil viscosity is wrong.	● Use oils of different viscosities, depending on ambient temperature.
	● Battery becomes weak and the engine does not turn over quick enough.	● Clean battery cables and terminals.
		● Charge the battery.
		● In cold weather, always remove the battery from the engine, charge and store it indoors. Install it on the machine only when the machine is going to be used.
Insufficient engine power.	● Insufficient or dirty fuel.	● Check the fuel system.
	● Air cleaner is clogged.	● Clean or replace the air cleaner element.
	● Spark plug defective.	● Adjust the spark plug gap or replace it.
Engine stops suddenly.	● Insufficient fuel.	● Refuel.

Trouble	Cause	Countermeasure
Rough engine running.	● Spark plug defective.	● Adjust the spark plug gap or replace it.
	● High tension cord defective.	● Consult your KUBOTA Dealer.
	● Ignition coil defective.	● Consult your KUBOTA Dealer.
	● Fuel hose or fuel filter clogged or damaged.	● Clean or replace fuel lines, and consult your KUBOTA Dealer.
	● Improper or stale fuel. (Fuel quality is poor.)	● Replace fuel and consult your KUBOTA Dealer.
	● Air cleaner is clogged.	● Clean or replace the air cleaner element.
Exhaust fumes are colored. (Black, Dark or Gray)	● Overload.	● Reduce load.
	● Low grade fuel is used.	● Use specified fuel.
	● Air cleaner is clogged.	● Clean or replace the air cleaner element.
Exhaust fumes are colored. (White or Blue)	● Excessive engine oil.	● Reduce to the specified oil level.
	● Piston ring is worn or stuck.	● Consult your KUBOTA Dealer.
Engine overheats.	● Engine is overloaded.	● Lower speed or reduce load.
	● Engine oil is insufficient.	● Replenish engine oil.
	● Low coolant level.	● Fill cooling system to the correct level; check radiator and hoses for loose connections or leaks.
	● The motor driven fan does not turn.	● Check to see if the fuse is not blown. ● Check the electric system.
	● Dirty radiator core or grille screens.	● Remove all trash.
	● Coolant flow route corroded.	● Flush cooling system.
Engine diagnostic light comes on.	---	● Consult your KUBOTA Dealer.
Engine will not idle.	● Spark plug defective.	● Adjust the spark plug gap or replace it.
	● Faulty spark plug.	● Replace the spark plug.

If you have any questions, consult your local KUBOTA Dealer.

BATTERY TROUBLESHOOTING

Trouble	Cause	Countermeasure	Preventive measure
Starter does not function.	● Battery overused until lights are dim.	● Charge battery sufficiently.	● Charge the battery properly.
	● Battery has not been recharged.		
	● Poor terminal connection.	● Clean the terminal and tighten securely.	● Keep the terminal clean and tight. Apply grease and treat with anti-corrosives.
	● Battery life expired.	● Renew battery.	
From beginning starter does not function, and lights soon become dim.	● Insufficient charging.	● Charge battery sufficiently.	● Battery must be serviced properly before initial use.
When viewed from top, the top of plates look whitish.	● Battery was used with an insufficient amount of electrolyte.	● Add distilled water and charge the battery.	● Regularly check the electrolyte level.
	● Battery was used too much without recharging.	● Charge battery sufficiently.	● Charge the battery properly.
Recharging is impossible.	● Battery life expired.	● Replace battery.	
Terminals are severely corroded and heat up.	● Poor terminal connection.	● Clean the terminal and tighten securely.	● Keep the terminal clean and tight. Apply grease and treat with anti-corrosives.
Battery electrolyte level drops rapidly.	● There is a crack or pin holes in the electrolytic cells.	● Replace battery.	
	● Charging system trouble.	● Consult your local KUBOTA Dealer.	

If you have any questions, consult your local KUBOTA Dealer.

MACHINE TROUBLESHOOTING

Trouble	Cause	Countermeasure
Machine operation is not smooth.	● Hydrostatic transmission fluid is insufficient.	● Replenish oil.
	● Filter is clogged.	● Replace the filter.
Machine does not move while engine is running.	● Parking brake is on.	● Release the parking brake.
	● Transmission fluid level is insufficient.	● Replenish oil.
Brakes not working correctly	● Brake fluid level is low.	● Check fluid level.
	● Air is in brake system.	● Consult your KUBOTA Dealer.
	● Brake pads are worn.	● Consult your KUBOTA Dealer.
Brake noise	---	● Consult your KUBOTA Dealer.

If you have any questions, consult your local KUBOTA Dealer.

OPTIONS

Consult your local KUBOTA Dealer for further details.

- Backup Beeper
- Bed Liner
- Cab Heater (cab only)
- Camo Steel Cab
- Fabric Cover
- Front Accessory Box
- Front Guard (Silver)
- Front Heavy Load Strut
- Front Trailer Hitch & Pin (2")
- Front Work Light
  (for plastic canopy or no canopy, one or two)
- Modular Cab
  (W/ steel doors)
- Plastic Canopy (Black)
- Rear Net
- Rear Trailer Hitch & Pin (2")
- Rear Work Light
  (for plastic canopy or no canopy)
- Safety Windshield
- Snow Blade (62") require Heavy Duty Spring Kit
- Speedometer
- Strobe Light
- Turn Signal / Hazard Light Kit
- Warn 2.5CI
- Work Lights Kit
  (for metal canopy or cab, include two lights for front or rear)

ENGINE EMISSION RELATED INFORMATION

◆ **The GZ460F-E3 engine conforms to U.S. EPA and California emission regulations for off-road small SI engines.**

- Emission compliance period: 1000 HOURS
- CARB emissions durability period: EXTENDED

◆ **Exhaust Emission Control System**

- Throttle Body Injection, Electronic Control Module, Three Way Catalyst