WSM

WORKSHOP MANUAL
KUBOTA EXCAVATOR

KX 36·61·101 41·71·151

MECHANISM CHAPTER

Kubota

Code No.97899-60271

MECHANISM CHAPTER

[I] Product & Sales

[1] General

Purpose of Development

- **Mini backhoe for comfortable operation in urban areas**

◆ **Market trend**

Demand for mini backhoes is ever increasing along with the expansion of domestic demand.
On the other hand, their trade-in rate is also increasing.

◆ **Trend classified by type of construction work and use of a backhoe**

1. Increase in number of construction works for urban areas
   - Sewage work ● Housing construction
   - Urban redevelopment ● Power cable laying
   - Telephone line laying
2. Expansion of use of a backhoe (mainly in related markets)
   - Agriculture ····· for digging lotus roots and chinese yams
   - Gardening ● Works in greenhouses
   - Orchards ● Soft grounds
   - Multiple purposes ····· for dismantling, mowing, snow-removal works, etc.

◆ **Trend of public opinion**

1. Human-orientedness
2. Tougher safety rules and regulations
3. Demand for uniqueness
4. Thriftiness: Lower cost

What Users Need

A reliable powerful machine that can show the best of its performance whenever necessary.

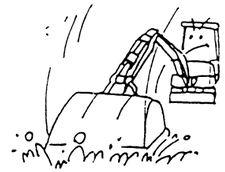

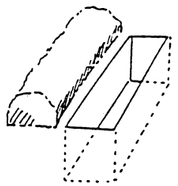

A mini backhoe that can easily perform subtle operations for clean and precise work results.

A mini backhone intended for works in urban areas that emits little operating noise and is easy to use in narrow work sites.

A multi-purpose mini backhoe that can handle many types of works such as crushing and dismantling works.

A machine that can reduce the operator's fatigue.

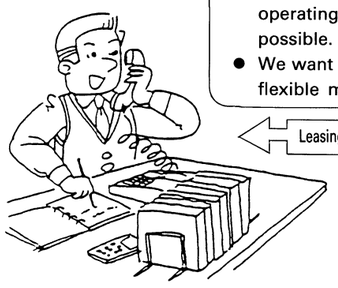

- We want a mini backhoe that operators unfamiliar with Kubota's machines can easily handle.
- We want to keep the operating cost as low as possible.
- We want to have highly flexible machines.

Leasing/Rental company

Kubota's Response

1. For use in urban areas

1—1 Low-noise design suitable for works in urban areas
- Operating noise made soft by applying noise insulating covers, etc. to reduce intake and exhaust noises

1—2 Short turning radius for narrow work sites
- Short turning radius and wide operating range attained by widening the boom operating angle

1—3 Rubber crawler replaceable in accordance with the purpose of use
- Easy to replace with an iron crawler

2. For comfortableness in performing works

2—1 Digging power and traveling speed equivalent of those of higher class models
- Newly-equipped power-up function to provide the maximum power whenever necessary

2—2 Operator-friendly maneuverability
- Side-located tilting operating lever
- Variable turning speed
- Wide operating angle

2—3 High-power new engine
- Fuel-efficient new TVCS engine

2—4 Walk-through canopy to allow the operator to get on and off from both sides
Comfortable cab with wide foot area
- Front hoses arranged inside/Side-located tilting operating lever

3. For multiple purposes

3—1 Service port provided as standard
- Third line and overlord relief valve for bucket bottom side are equipped

3—2 Wide variations
- Rubber-crawler-equipped models
- Expansion-arm-equipped models
- Closed-cab models
- Abundant attachments for multiple purposes

4. For uniqueness

4—1 Simple new design to match with urban atmosphere
- Well-arranged color and design to go well with views in urban areas
- Resin-made (FRP) canopy

5. For leasing/rental companies

5—1 Parts excellent in reliability and safety
- Thick-plated bonnet protector
- Thick-plated bonnet rear frame

5—2 Cleanable fuel tank inside
- Service cover for cleaning provided atop the tank

5—3 Operating pattern switchable to that of other manufacturers' models

Meeting the Market Needs

European specifications ○: Available ×: Not available —: Not subject to the measure

No		Market needs	Market	Measures taken for the KX Series Models	Europe KX 36	Europe KX 41	Europe KX 61	Europe KX 71	Europe KX 101	Europe KX 151	KTC KX 41	KTC KX 71	KTC KX 101	KTC KX 151	KCL KX 41	KCL KX 71	KTA KX 101	KTA KX 151
Maneuverability, Cab comfort	①	Hydraulic pilot operating lever is necessary. (Indispensable for 2-ton and higher capacity models.)	Europe	● Provided as standard for higher class models than the KX61. (European specifications) ● To be provided for KX41 in response to fervent request from the KDG.	—	— (○)	○	○	○	○	—	—	—	○	—	—	○	○
	②	Pedals in foot area should neatly be arranged to ensure space enough for feet (not to contact swing/swivel switching pedel).	Europe	● Swing/swivel switching pedal located under the seat (at the operator's heels) to prevent accidental contact with feet. ● Foot area provided with wider space by approx. 25% than before.	○	○	○	○	○	○	○	○	○	○	○	○	○	○
	③	Footrests are spaced too narrow to keep feet relaxed and to brace legs. This may fatigue the operator in a long-hour operation.	Europe	● Footrests are spaced wide enough (40cm) for the operator to naturally spread his legs. Another footrests are also provided at the foot of both pillars in the cab for the operator to brace his legs.	○	○	○	○	○	○	○	○	○	○	○	○	○	○
	④	As is related to Item (3) above. the KX101, for instance, has the traveling speed change pedal located at the foot area's left end which is the suitable place for left foot to rest. This may cause the operator to accidentally step on the pedal, and let the 3P flow all its amount into the arm, etc., resulting in many troubles.	Europe	● In the KX Series models, the traveling speed change pedal, which is designed only to gain speed when stepped on, does not cause any trouble to the hydraulic system.	—	—	○	○	○	○	—	○	○	○	—	—	○	○
	⑤	Operator gets caught on the side-located operating lever when getting on and off the machine. This may result in failure to pass the TBG inspection. (Mechanical lever)	Europe	● Tiltable operating lever and lock lever are provided for the KX36 and KX41 (mechanical system), and models higher in class than KX61, respectively, for the operator to safely get on and off the machines.	○	○	—	—	—	—	○	○	○	—	○	○	—	—
Operability	⑥	The KH101 is inferior to the Pel-Job's LS2000 in the digging power. (LS2000:2835kg, KH101:2460kg)	Europe	● In the KX101, the digging power, boosted up to 2695kg by the power-up function, still falls short of that of the LS2000 by 5%, but is deemed almost equivalent of it. (Refer to Item (7).)	—	—	—	—	○	—	—	—	—	—	—	—	○	—
	⑦	Other manufacturers have come to employ variable capacity pump for their 3-ton and higher-capacity models to improve the front digging power.	Europe, North America	● Kubota employs for the KX Series models its unique power-up hydraulic system to ensure the front digging power equivalent of or higher than that of other manufacturers' models. (*indicates a variable-capacity-pump-equipped model.)	○	○	○	○	○	○	○	○	○	○	○	○	○	○
	⑧	Traveling speed should be increased. (Especially for the KH41 (1.9km/h), KH51 (1.6km/h), and KH66 (1.9km/h).)	Europe, North America	Traveling speed has been improved with two speed-system provided for higher class models than the KX61. (European specifications)	○	○	—	—	—	—	○	—	—	—	○	○	—	—
					—	—	○	○	○	○	—	○	○	○	—	—	○	○

	Kubota	Komatsu	Yanmar
Model	KX101	*PC30	*B37-p
Digging power (kg)	2695	2400	2400
Traveling speed (km/h)	1.9/3.6	2.5/3.8	2.2/4.3
Model	KX151	*PC45	*B50-p
Digging power (kg)	3330	3160	3300
Traveling speed (km/h)	1.8/3.6	2.6/3.8	2.2/4.3

Kubota	km/h	Kubota	Komatsu	Yanmar	Pel-Job
KH41	Model	KX41	PC07	B17-p	EB14
1.9	Speed	2	2	2	2.4
KH51	Model	KX61	PC10	B22-p	EB22
1.6	Speed	2.1/3.9	2	2.1	2.3
KH66	Model	KX71	PC15	YB231	
1.9	Speed	2.1/4.1	2	2	
KH101	Model	KX101	PC30	B37	
1.7/3.5	Speed	1.9/3.6	2.5/3.8	2.2/4.3	
KH151	Model	KX151	PC45	YB50	
1.5/3.0	Speed	1.8/3.6	2.6/3.8	2.2/4.3	

European specifications ○: Available ×: Not available —: Not subject to the measure

No		Market needs	Market	Measures taken for the KX Series Models	Europe KX 36	Europe KX 41	Europe KX 61	Europe KX 71	Europe KX 101	Europe KX 151	KTC KX 41	KTC KX 71	KTC KX 101	KTC KX 151	KCL KX 41	KCL KX 71	KTA KX 101	KTA KX 151
Durability	⑨	There should be more clamps in the service port return line. (To prevent the breaker's pulsation from damaging the pipes and clamps.)	Europe	● More clamps have been added to the center of the service port return line on the boom.	○	○	○	○	○	○	○	○	○	○	○	○	○	○
	⑩	The engine bonnet should be provided with a guard to protect it against breakage resulting from hitting things.	Europe	● The KX Series models have a bonnet protector provided at their rear.	○	○	○	○	○	○	○	○	○	○	○	○	○	○
	⑪	The bucket cylinder rod of the KH101 thru KH191 gets bent while performing hydraulic breaker operation. (Port relief should be provided.)	Europe	● The KX Series models have a port relief provided at the bottom of the all-model-applicable bucket cylinder.	○	○	○	○	○	○	○	○	○	○	○	○	○	○
	⑫	The KH66's arm gets bent. (The arm tip gets bent in the direction of the operator's seat.) Table in the right shows the calculated values of stress applied to the weakest portion of the arm with the bucket's digging and turning forces put together.	Europe	● The section modulus of the arm tip has been improved to the degree where no serious problem is noticed. (kg/mm²)	○	○	○	○	○	○	○	○	○	○	○	○	○	○
	⑬	All the return oils should be filtrated to improve the life of the pump.	Europe	● All the return oils are made to flow through the filter.	○	○	○	○	○	○	○	○	○	○	○	○	○	○
Versatility	⑭	The service port pipes should be extended to the arm.	Europe	● The service port pipes have been extended to the arm.	○	○	○	○	○	○	○	○	○	○	○	○	○	○
	⑮	The service port of the KH51 and KH66 should be so improved that it may allow more oil flow rate.	Europe	● The KX61 and KX71 are so devised that oils converge at the service port to allow more flow rate. (All-model-applicable oil converging system)	○	○	○	○	○	○	○	○	○	○	○	○	○	○

Model	KH66	KX71	KH-: No serious problem noticeable
Stress	17.5	11.9	Less than 13

Meeting the market needs (summary)

1. Highly demanded in the market are the follwing:
   Hydraulic pilot operating lever for better maneuverability(①), more space in the cab for more comfortableness(②), more digging power for better operability(⑥ and ⑦), hydraulic breaker for higher durability and more general purposes (⑨, ⑪, ⑬, ⑭, and ⑮), etc.
2. Kubota is predominant over Komatsu and Yanmar in that we have adopted a hydraulic pilot operating lever for all the 2-ton and higher-capacity KX Series models; Komatsu for models with capacities more than 3 tons and Yanmar for none.
3. To compete with other manufacturers' variable-pump-equipped (to improve digging power and traveling speed) models (Komatsu's PC30 and PC45, and Yanmar's B37 and B50), we have adopted for our models our unique hydraulic system which allows digging power almost equivalent of that of higher class models. For traveling speed, we have adopted for the KX Series (2-ton class and higher models) the two-speed system which helps attain performance equivalent of or higher than that of other manufacturers' variable-pump-equipped models.
   On the other hand Komatsu and Yanmar employ the two-speed system in 3-ton and higher-capacity models.
4. A variety of attachments - - such as service port, relief valve for the cotrol valve's bucket section and large oil cooler that can be used for any model - - are provided as standard; especially for breaker-equipped models.
5. The engine output, maximum digging depth, maximum vertical digging depth, and bucket capacity are equivalent of or greater than those of other manufacturers' competitive models.

Quick Reference Chart to Machine Features

Product concept: Comfortable, powerful & versatile urban-use mini-excavator

KX series for KDG·KE·KUK·EKSA version
- Lever control : KX36 — Mechanical
  KX41~151 — Pilot operated
- Travel speed : KX61~151 — Hi-Lo travel speed stage
- Kubota STD arm & bucket

1. Low Noise For Urban Use
   - Comfortable exhaust & inlet sound reduced by silencer and shield.
     7 m distance: 63~69dBA.

2. Easy Lever Operation
   - Light operating force by pilot operated valve (KX41~151).
   - Tilting wrist lever.
   - Safety lock lever at a touch.

3. Power-up Hydraulic Circuit
   - One class bigger digging force.

4. Breaker (Hammer) Application
   - STD service port & control valve.
   - STD large capacity oil cooler.
   - Port relief valve for bucket circuit.
   - Confluence pump flow: KX36~151.

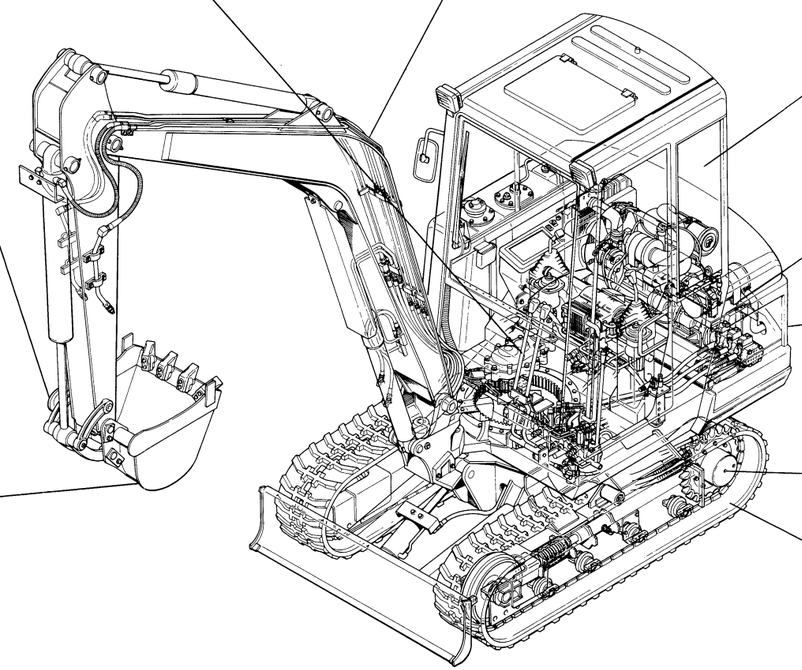

5. Simple Smart Look
   - Urban fit new design & color.
   - FRP Canopy.

6. Compact Swivel Radius, Canopy type
   90 degree swing angle to left and upgrading the boom operating angle by 20° turn up small swivel radius.

7. Confortable Operating Room
   - Spacious cab: 880 → 920mm.
   - Large foot space: 25% up.

8. Big Power New TVCS Engine
   - Key stop, all model
     KX36: D662 (13.5ps/2800rpm)
     KX41: D1105 (20ps/2400rpm)
     KX61: D1105 (25ps/3000rpm)
     KX71: V1505 (29ps/2600rpm)

9. Reliable Bonnet
   Plank bonnet (1.2→3.2mm plate thickness) and bonnet protector.

10. Excellent Travel Performance
    - High speed for KX61~151 (3.5~4.0km/h).
    - Wheel motor with planetary gear reduction.

11. Quick Interchangeable
    Steel and Rubber Tracks.

12. Walk Through Step
    - Able to ride on and off from both sides of the machine.
    - Front hydraulic hoses inside swing bracket.

13. Easy Access Fuel Tank
    Inside to clean
    - Fuel tank cover for cleaning.

14. Customer Satisfaction
    - Super angle; Boom swing L: 90° R: 50° (Appox).
    - One lever operation of swivel or swing.
    - Telescopic arm (Option).

General Specifications

Machine model			KX36	KX41	KX61	KX71	KX101	KX151
Machine weight (Iron track)	Canopy	kgf	1280	1410	2200	2630	3360	4750
	Cab	kgf	1380	1510	2350	2780	3510	4900
Machine weight (Rubber track)	Canopy	kgf	1220	1350	2130	2560	3270	4540
	Cab	kgf	1320	1450	2280	2710	3420	4690
Machine length		mm	3520	3555	4230	4515	4990	5515
Machine height	Canopy	mm	2190	2190	2340	2340	2360	2445
	Cab	mm	2155	2155	2355	2355	2375	2460
Machine width		mm	1055	1055	1400	1560	1610	1840
Min.ground clearance		mm	170	170	295	295	295	315
Bucket capacity (Standerd)	Struck	m^3	0.03	0.035	0.05	0.055	0.08	0.12
	CECE heaped	m^3	0.035	0.04	0.06	0.065	0.10	0.14
	SAE heaped	m^3	0.04	0.045	0.07	0.075	0.12	0.16
Standard bucket width		m^3	400	450	450	480	600	650
Working capacity (45° side ditch)	Cycle time	sec.	10.77	9.26	10.81	9.21	9.91	11.61
	Work amount	m^3 / h	22.82	28.24	35.30	46.14	61.20	78.37
Noise level	At operatior's ear	dB (A)	74.2	74.4	75.0	74.0	75.0	77.5
	At 7m away	dB (A)	62.6	64.7	66.2	65.5	67.5	68.5
Boom length		mm	1605	1605	2070	2240	2510	2870
Arm length (L.arm)		mm	750 (1150)	900 (1150)	1050 (1300)	1200 (1400)	1300 (1600)	1500 (1850)
Bucket length		mm	481	481	595	594.5	652.5	772.5
Operating space (Cab)	Max.digging height (L.arm)	mm	3030 (3690)	3080 (3675)	4085 (4215)	4210 (4300)	4630 (4695)	5105 (5255)
	Max.dumping height (L.arm)	mm	1975 (2590)	2035 (2575)	2805 (2935)	2955 (3045)	3250 (3320)	3555 (3705)
	Max.digging depth (L.arm)	mm	1910 (2310)	2060 (2310)	2375 (2625)	2670 (2870)	3080 (3380)	3510 (3860)
	Distance to max.digging depth (L.arm)	mm	1455 (1455)	1440 (1435)	1895 (1895)	1895 (1885)	1975 (1960)	2295 (2280)
	Max.vertical digging depth (L.arm)	mm	1500 (1885)	1620 (1865)	1780 (2025)	1950 (2145)	2235 (2525)	2715 (3060)
	Max.digging reach (L.arm)	mm	3475 (3850)	3610 (3845)	4360 (4590)	4635 (4815)	5065 (5340)	5780 (6105)
	Min.front turning radius ; Straight / Swing	mm	1640 / 1170	1645 / 1170	1835 / 1330	1935 / 1420	2120 / 1685	2550 / 2100
	Rear end turning radius	mm	1090	1090	1250	1350	1485	1515
Max.bucket digging force at teeth root		kgf	1245	1275	1780	2490	2695	3335
Max.STD arm digging force at teeth root		kgf	815	900	1335	1505	2005	2650
Lifting capacity		kgf	170	192	344	331	442	565
Boom swing angle, left / right		degree	90° / 50°	90° / 50°	90° / 50°	90° / 50°	80° / 43°	80° / 43°
Boom swing moment, left / right		kgf·m		870.9 / 611.8	1649.0 / 1236.7	1954.3 / 1465.8	2414.9 / 1811.1	4850.6 / 3383.3
Body swivel speed		rpm	9.7	8.3	9.0	8.7	9.4	8.4
Body swivel moment		kgf·m	227.2	227.2	410.6	501.1	707.0	1097.0
Body swivel capable angle		degree	29≦	25≦	26≦	25≦	25≦	26≦
Traction force (cab,iron track)		kgf	1440	1633	2666	3232	4290	5076
Travel speed, high / low		km / h	1.9	2.0	3.9 / 2.1	4.1 / 2.1	3.6 / 1.9	3.6 / 1.8

—European version—

Machine model				KX36	KX41	KX61	KX71	KX101	KX151
Dozer	Width×height×length		mm	930×250×550	960×250×617	1400×308×1134	1450×308×1380	1510×308×1380	1840×350×1390
	Lift above GL×below GL		mm	165×175	165×175	255×360	←	260×350	310×360
	Displacement capacity		m^3	0.058	0.06	0.208	0.215	0.224	0.309
Undercarriage	Shoe width×link No.			200×32	230×32	250×37	300×37	350×43	400×38
	Track shoe length		mm	1370	1370	1765	1766	2072	2425
	Tumbler distance		mm	1010	1010	1300	1300	1600	1860
	Track shoe center distance		mm	730	730	1150	1150	1160	1440
	Ground contact pressure	Canopy	kgf/cm²	0.29	0.28	0.30	0.29	0.27	0.31
		Cab	kgf/cm²	0.31	0.30	0.32	0.31	0.28	0.32
Engine	Model			D662-BH	D1105-BH	D1105-BHG	V1505-BH	V1902-BH5	V1902-BH6
	SAE J1349 (Gross)		HP	15.0	22.2	27.7	32.2	36.6	42.7
	DIN6270NB		PS	13.5	20	25	29	33	39
	Rated Max.Speed		rpm	2800	2400	3000	2600	2450	2800
	Idle Speed		rpm	900～1000	1000～1200	←	←	←	←
	Max. torque		kgf·m / rpm	3.8 / 1900	6.6 / 1500	6.6 / 1700	9.1 / 1700	11.7 / 1500	11.7 / 1500
	Bore×stroke		mm	64×68	78×78.4	78×78.4	78×78.4	85×82	85×82
	Displacement		cc	656	1123	1123	1498	1861	1861
	Fuel cousumption ratio		kgf / ps·h	199	190	190	190	210	210
Hydraulic system	Pump flow rate	P_1	ℓ / min	11.2	13.2	28.2	29.1	32.3	37.0
		P_2	ℓ / min	11.2	13.2	28.2	29.1	32.3	37.0
		P_3	ℓ / min	—	9.8	17.1	18.2	21.3	31.4
		P_4	ℓ / min	—	—	2.30	2.00	3.76	4.30
	Main relief pressure setting	a_1	kgf/cm²	205	195	150	175	160	190
		a_2	kgf/cm²	205	210	165	200	210	210
		a_3	kgf/cm²	—	195	150	160	195	190
		a_4	kgf/cm²	—	—	—	—	—	140
	Travel motor total displacement		cc / rev	305.7	338.5	955.8 / 503.1	←	1208.4 / 636	1738.8 / 884.1
	Swivel motor	Displacement	cc / rev	195	195	195	16.4	16.4	23.3
		Relief pressure	kgf/cm²	120	120	135	150	203	203
Hydraulic system	Service port	Flow rate	ℓ / min	22.4	26.4	56.4	58.2	64.6	74.0 ¦ 37.0
		Operating pressure	kgf/cm²	205	210	165	200	210	140 ¦ 210
	Cylinder Bore×rod dia. ×stroke	Boom	mm	50×30×386	55×30×386	80×40×482	←	90×45×547	100×55×706
		Arm	mm	50×30×419	55×30×415	70×40×578	←	80×45×632	90×55×770
		Bucket	mm	55×30×286	←	70×40×374	75×45×374	70×40×490	75×45×585
		Swing	mm	55×30×360	←	80×40×465	←	←	100×55×607
		Dozer	mm	65×35×76	70×35×76	90×45×145	←	←	100×60×175
	Oil cooler capacity, Code No.		kcal / h	2230 68191-93511	←	3100 68301-64111	4270 68391-93511	←	←
Fuel, coolant & lubricant	Fuel tank		ℓ	24.0	24.0	30.0	57.0	57.0	66.0
	Coolant		ℓ	2.7	4.0	4.0	5.0	8.0	8.0
	Engine		ℓ	2.5	4.0	4.0	5.3	7.5	7.5
	Final drive (each side)		ℓ	0.25	0.25	0.5	0.5	0.6	1.2
	Swivel drive		ℓ	—	—	—	1.3	1.3	2.2
	Hydraulic tank		ℓ	6.0	6.0	15.0	20.0	25.0	40.0

Performance Comparison Chart (1/2)

European version

				KX36 (Canopy) D662 (13.5/2800)										KX41 (Canopy) V1105 (20/2400)										KX61 (Canopy) V1105 (25/3000)									
					KH 36		PC 05-7		B 12-p		TB 15		LB 12		KH 41		PC 07-2		B 17-p		TB 15		EB 14		KH 51		PC 10-6		B 22-p		EB 22	
Manufacturer			Unit		Kubota		Komatsu		Yanmar		Takeuchi		Peljob		Kubota		Komatsu		Yanmar		Takeuchi		peljob		Kubota		Komatsu		Yanmar		peljob	
Main specifications		1 Bucket capacity (Heaped stack) Q	m^3	0.035	0.035		0.035		0.040		0.031		0.035	0.040	0.040		0.040		0.045		0.031		0.040		0.060	0.060		0.060		0.060		0.050	
		2 Bucket capacity (Struck ×2) q	m^3	0.06	0.06	=	0.06	=	0.06	=	(0.05)	○	0.06	=	0.07	0.07	=	0.07	=	0.075	=	(0.05)	○	(0.07)	=	0.10	0.10	=	0.10	=	0.10	=	(0.08)	○
		3 Engine Output ps	ps	13.5	12.0	○	13.0	=	14.5	△	14.5	△	13.2	=	20.0	16.0	○	15.5	○	16.0	○	14.5	○	13.2	○	25.0	19.0	○	19.0	○	19.0	○	20.0	○
		4 Machine weight w	kg	1380	1200		1160		1250		1200		1245	1510	1345		1310		1350		1200		1290		2350	2215		2100		2100		2270	
		5 Machine rank index (qpsw)		1.02	0.97	○	0.97	○	1.03	=	0.95	○	1.00	=	1.27	1.15	○	1.12	○	1.17	○	1.00	○	1.06	○	1.79	1.61	○	1.59	○	1.59	○	1.54	○
	Engine	6 Number of cylinders		3	2	○	3	=	3	=	3	=	3	=	3	3	=	3	=	3	=	3	=	3	=	3	3	=	3	=	3	=	3	=
		7 Displacement	cc	656	618		879		879		879		849	1123	927		879		879		870		849		1123	927		994		994		1061	
	Efficiency	8 Working capacity	m^3/h	22.82	20.53	○	*20.29	○						28.24	26.19	○									41.00	33.29	○	27.50	○				
		9 Cycle time		10.77	10.52		*10.65							9.26	9.62										9.32	10.81		10.77					
	Operating range	10 Maximum digging depth	mm	1910	1865	○	1900	=	1900	=	2140	△	1855	=	2060	1940	○	2155	=	2100	=	2140	=	2000	=	2375	2320	=	2310	=	2360	=	2330	=
		11 Maximum vertical digging depth	mm	1500	1260	○	*1460	=	1450	=	1530	=			1625	1310	○	1670	=	1600	=	1530	○			1780	1705	=	1870	=	1700	=	1790	=
		12 Maximum digging height	mm	3030	2890	○	3335	△	3430	△	3640	△	2985	=	3085	3035	=	3430	△	3570	△	3640	△	3040	=	4085	3860	○			3720	○	3800	○
		13 Swing angle (L/R)	degree	90/50	90/50	=	90/50	=	45/90	=	70/50	=	50/40	○	90/50	90/50	=	90/50	=	45/90	=	70/50	=	50/50	○	90/50	90/50	=			50/90	=	50/50	○
		14 Minimum turning radius at swing operation	mm	1170	1180	=			950	△	1050	△	1310	○	1170	1220	=					1275	○	1500	○	1330	1335	=			1080	△	1740	○
	Operating power	15 Bucket digging force (teeth root)	kg	1245	980	○	1150	○	1050	○	1080	○	1275	=	1185	1190	○	1150	○	1050	○	1080	○	1275	=	1615	1615	○	1700	○	1700	○	1670	○
		16 Bucket digging power, at power-up operation	kg	1245											1275											1780							——	
		17 Arm digging power (teeth root)	kg	820	775	○			800	=	770	○	750	○	905	940	=			710	○	770	○	750	○	1345	1235	○	• 1166	○	1300	=	1100	○
		18 Lifting capacity	kg	170	• 170	=	*195	=							192	• 192	=									344	• 337	=	266	○				
		19 Traveling speed at low gear	km/h	1.9	1.8	=	*2.0	=	1.8	=	2.0	=	2.4	△	2.0	1.9	=	*2.0	=	2.0	=	2.0	=	2.4	△	2.1	1.6	○	2.0	○	2.1	○	2.3	○
		20 Traveling speed at second gear	km/h	——	——		——		——		——		——		——	——		——		——		——		——		3.9	——		——		——		——	
		21 Swivel speed	rpm	9.7	9.4	=	*9.7	=	9.3	=			9.0	=	8.3	8.5	=	*9.1	=	10.4	△			9.0	=	9.0	8.2	=	9.3	=	9.4	=	9.2	=
	Flexibility	22 Operating noise	dbA	62.6	66.0	○	65.0	○			71.0	○	74.0	○	64.7	66.0	○	65.0	○			71.0	○			66.2	68.0	○					72.0	○
		23 Rubber crawler replacement		Easy	Impossible	○	Easy	=	Impossible	○					Easy	Impossible	○	Easy	=	Impossible	○					Easy	Possible	○	Easy	=	Impossible	○		
		24 Expansion arm		Provided	Provided	=	None	○	None	○	(None)	○	(None)	○	Provided	Provided	=	None	○	None	○	(None)	○	(None)	○	Provided	Provided	=	None	○	None	○	(None)	○
	Cab comfort	25 Cab space	mm	880	880										880	880										920	880							
		26 Walk-through		Possible	Impossible	○	Possible	=	Possible	=	(Possible)	=	(Possible)	=	Possible	Impossible	○	Possible	=	Possible	=	(Possible)	=	(Possible)	=	Possible	Impossible	○	Possible	=	Possible	=	(Possible)	=
	Maneuverability	27 Swivel/Swing operation performed with:		Same lever	←	=	Separate lever	○	Same lever	○					Same lever	←	=	Separate lever	○	Separate pedal	○					Same lever	←	=	Separate lever	○	Separate lever	○		
		28																																
		29 Operating lever system		Mechanical	Mechanical	=	Mechanical	=	Mechanical	=	Mechanical	=	Mechanical	=	Mechanical	Mechanical	=	Mechanical	=	Mechanical	=	Mechanical	=	Mechanical	=	Hydraulic	Mechanical	○	Mechanical	○	Mechanical	○	Hydraulic	=
		30 Lever position/adjustment		Side/Tilting	Front	○	Front	○	Front	○	Side-Impossible	○	Front-Impossible	○	Side/Tilting	Front	○	Front	○	Front	○	Side-Impossible	○	Front-Impossible	○	Side/Tilting	Side-Impossible	○	Front	○	Front	○	Side-Impossible	○
	Durability	31 Pin seal		Provided	Provided	=	Provided	=	None	○					Provided	Provided	=	Provided	=	None	○					Provided	Provided	=	Provided	=	None	○		
		32 Rear protector		Entirely	Partially	○	Partially	○	Entirely	=	Partially	○			Entirely	Partially	○	Partially	○	Entirely	=	Partially	○			Entirely	Partially	○	Partially	○	Entirely	=		
	Appearance	33 Traveling motor installation		Wheel	Built in	○	Wheel	=	Wheel	=	Wheel	=	Wheel	=	Wheel	Built in	○	Wheel	=	Wheel	=	Wheel	=	Wheel	=	Wheel	Built in	○	Wheel	=	Wheel	=	Wheel	=
		34 Crawler overhang		Sliding plate	←	=	←	=	←	=	←	=			Sliding plate	←	=	←	=	←	=	←	=			Sliding plate	←	=	←	=	←	=		
	For servicing	35 Fuel air vent		Automatic	←	=	←	=	←	=					Automatic	←	=	←	=	←	=					Automatic	←	=	←	=	←	=		
		36 Fuel tank cleaning port		Provided	None	○	None	○	None	○	None	○	None	○	Provided	None	○	None	○	None	○	None	○	None	○	Provided	None	○	None	○	None	○	None	○
		37 Hydraulic pump system		Geared	←	=	←	=	←	=	←	=	←	=	Geared	←	=	←	=	←	=	←	=	←	=	Geared	←	=	←	=	←	=	←	=
		38 Oil cooler		Provided	None	○	None	○	None	○	None	○			Provided	None	○	None	○	None	○					Provided	None	○	None	○	None	○		
		39 Service port flow rate	ℓ/min	22.5	23.0						31.6		32.0		26.4	26.4								32.0		56.5	24.5						39.0	
		40 Bucket cylinder port relief		Provided	None	○	None	○	None	○	None	○			Provided	None	○	None	○	None	○	None	○			Provided	None	○	None	○	None	○		

Performance comparison for European specifications ○: KX is superior. =: Equivalent of KX △: KX is inferior. ( ): Presumed • : Actual measuring deta *: Previous type

Performance Comparison Chart (2/2)

European version

				KX71H (Canopy) V1505 (29/2600)										KX101 (Cab) V1902BH3 (33/2450)										KX151 (Cab) V1902BH4 (39/2800)								
					KH 66		PC 15-2		YB 231		TB 25		LS286 (Cab)		KH 101		PC 30-7		B 37-c		TB36 (Cab)		EB36 (Cab)		KH 151		PC 45-7		B 50-c		TB45 (Cab)	
Manufacturer			Unit		Kubota		Komatsu		Yanmar		Takeuchi		peljob		Kubota		Komatsu		Yanmar		Takeuchi		peljob		Kubota		Komatsu		Yanmar		Takeuchi	
Main specifications		1 Bucket capacity (Heaped stack) Q	m^3	0.070	0.065	○	0.070	=	0.070	=	0.070	=	0.055	○	0.100	0.100	=	0.100	=	0.100	=	0.100	=			0.140	0.140	=	0.140	=	0.140	=	0.120	○
		2 Bucket capacity (Struck ×2) q	m^3	0.11	0.106		0.11		0.11		0.12		(0.09)		0.16	0.16		0.16		0.17		(0.16)				0.24	0.24		0.24		0.24		0.20	
		3 Engine output ps	ps	29.0	25.0	○	24.0	○	22.0	○	23.0	○	20.0	○	33.0	33.0	=	28.0	○	26.2	○	30.0	○	37.0	△	39.0	39.0	=	37.0	○	37.0	○	40.0	△
		4 Machine Weight w	kg	2780	2620		2400		2500		2500		3080		3510	3560		3355		3270		3500		3520		4900	4890		4450		4300		4500	
		5 Machine rank index(qpsw)		2.06	1.91	○	1.85	○	1.82	○	1.90	○	1.77	○	2.67	2.66	=	2.42	○	2.41	○	2.56	○			3.60	3.58	=	3.35	○	3.33	○	3.30	○
	Engine	6 Number of cylinders		4	3	○	3	○	3	○	3	○	3	○	4	4	=	3	○	3	○	3	○			4	4	=	4	=	4	=	4	=
		7 Displacement	cc	1498	1395		1232				1413		1061		1861	1861		1429		—		1400				1861	1861		1906				2369	
	Efficiency	8 Working capacity	m^3/h	46.14	38.82	○	30.77	○	41.08	○					61.20	55.28	○	*51.97	○	46.18	○					78.37	74.42	○	53.95	○				
		9 Cycle time		9.21	9.83		12.87		9.64						9.91	10.42		*10.39		12.25						11.6	11.6		12.7					
	Operating range	10 Maximum digging depth	mm	2670	2540	○	2500	○	2500	○	2490	○	2730	=	3080	3070	=	3135	=	3150	=	3070	=	3065	=	3510	3500	=	3535	=	3600	=	3440	=
		11 Maximum vertical digging depth	mm	1950	1712	○	1850	○	1720	○	1710	○	2000	=	2235	1985	○	2390	△	2300	=	1616	○	2170	=	2715	2500	○	2660	=	2700	=	2580	○
		12 Maximum digging height	mm	4210	3925	=	4480	△							4560	4155	○	5250	△	4600	=	3942	○	4370	○	5105	4750	○	5700	△	5100	=	4630	○
		13 Swing angle (L/R)	degree	90/50	90/50	=	90/50	=	45/90	=			70/60	=	80/43	80/43	=	90/50	=	50/90	=	50/50	○			80/43	80/43	=	90/50	=	50/90	=	50/50	○
		14 Minimum turning radius at swing operation	mm	1420	1385	=									1745	1765	=			1500	△					2100	2175	○			1900	△		
	Operating power	15 Bucket digging force (teeth root)	kg	2165	2190	○	1800	○	1700	○	1760	○	2020	○	2435	2460	○	2400	○	2400	○	2150	○	2575	○	3010	3040	○	3160	○	3300	=	2600	○
		16 Bucket digging power at power-up operation	kg	2475	—		—		—		—		—		2695											3330								
		17 Arm digging power (teeth root)	kg	1435	1360	○			1186	○	1365	○	1580	△	2020	1835	○	*1560	○	1700	○	1680	○			2660	2375	○						
		18 Lifting capacity	kg	331	359	=			359	=					442	457	=	*442	=	—						565	580	=						
		19 Traveling speed at low gear	km/h	2.1	1.9	○	2.0	○	2.0	○	1.8	○			1.9	1.7	=	2.5	=	2.2	△	1.6	=			1.8	1.5	○	2.6	=	2.2	=	1.7	=
		20 Traveling speed at second gear	km/h	4.1	—		—		—		3.4		—		3.6	3.5		3.8		4.3		3.3		—		3.6	3.0		3.8		4.3		3.3	
		21 Swivel speed	rpm	8.7	8.7	=	9.5	△	9.0	=					9.4	9.2	=	11.0	△	10.0	=					8.4	8.7	=	10.0	△	10.0	△	8.1	=
	Flexibility	22 Operating noise	dbA	65.5	68.0	○					69.0	○	71.5	○	67.5	69.0	○					68.0	○			68.5	69.0	○					74.0	○
		23 Rubber crawler replacement		Easy	Possible	○	Easy	=	Impossible	○					Easy	Possible	○	Possible	○	Possible	○					Easy	Possible	○	Possible	○	Possible	○		
		24 Expansion arm		Provided	Provided	=	None	○	None	○	None	○	None	○	Provided	Provided	=	None	○	None	○	None	○	None	○	None	None	=	None	=	None	=	None	=
	Cab comfort	25 Cab space	mm	920	880										920	880																		
		26 Walk-through		Possible	Impossible	○	Possible	=	Possible	=	Possible	=	—		—	—		—		—		—		—		—	—		—		—		—	
	Maneuverability	27 Swivel/Swing operation performed with:		Same lever	←	=	Separate lever	○	Separate pedal	○					Same lever	←	=	Separate lever	○	Separate pedal	○					Same lever	←	=	Separate lever	○	Separate pedal	○		
		28																																
		29 Operating lever system		Mechanical	Mechanical	○	Mechanical	○	Mechanical	○	Hydraulic	=	Hydraulic	=	Hydraulic	Mechanical	○	Hydraulic	=	Mechanical	○	Hydraulic	=	Hydraulic	=	Hydraulic	Mechanical	○	Hydraulic	=	Mechanical	○	Hydraulic	=
		30 Lever position/adjustment		Side/Tilting	Side-Impossible	○	Front	○	Front	○	Side-Impossible	○	Side-Impossible	○	Side/Tilting	Side-Impossible	○	Side-Impossible	○	Front	○	Side-Impossible	○	Side-Impossible	○	Side/Tilting	Side-Impossible	○	Side-Impossible	○	Front	○	Side-Impossible	○
	Durability	31 Pin seal		Provided	Provided	=	Provided	=	None	○					Provided	Provided	=	Provided	=	Provided	=					Provided	Provided	=	Provided	=	Provided	=		
		32 Rear protector		Entirely	Partially	○	Partially	○	Entirely	=	Partially	○	Partially	○	Entirely	Partially	○	Partially	○	Entirely	=	Partially	○			Entirely	Partially	○	Partially	○	Entirely	=	Partially	○
	Appearance	33 Traveling motor installation		Wheel	Built in	○	Wheel	=	Wheel	=	Wheel	=	Wheel	=	Wheel	Built in	○	Wheel	=	Wheel	=	Wheel	=	Wheel	=	Wheel	Built in	○	Wheel	=	Wheel	=	Wheel	=
		34 Crawler overhang		Upper roller	←	=	←	=	←	=	←	=	Sliding plate	○	Upper roller	←	=	←	=	←	=	←	=			Upper roller	←	=	←	=	←	=	←	=
	For servicing	35 Fuel air vent		Automatic	←	=	←	=	Button	○					Automatic	←	=	←	=	←	=					Automatic	←	=	←	=	←	=		
		36 Fuel tank cleaning port		Provided	None	○	None	○	None	○	None	○	None	○	Provided	None	○	None	○	None	○	None	○	None	○	Provided	None	○	None	○	None	○	None	○
		37 Hydraulic pump system		Geared	←	=	←	=	←	=	←	=	Variable	△	Geared	←	=	Variable	△	Variable	△	Geared	=	←	=	Geared	←	=	Variable	△	←	△	Geared	=
		38 Oil cooler		Provided	None	○	None	○	None	○					Provided	None	○	Provided	=	None	○					Provided	None	○	Provided	=	None	○		
		39 Service port flow rate	ℓ/min	58	29						(44.0)		40.0		64.5	53.5						(58)				74.0	74.0						(80)	
		40 Bucket cylinder port relief		Provided	None	○	None	○	None	○	None	○	None	○	Provided	None	○	None	○	None	○	None	○			Provided	None	○	None	○	None	○	None	○

Performance comparison for European specifications ○: KX is superior =: Equivalent of KX △: KX is inferior ( ): Presumed *: Front-digging type

Quick Reference Chart to Machine Features

Product concept: Comfortable, powerful & versatile urban-use mini-excavator

1. Low Noise For Urban Use
   - Comfortable exhaust & inlet sound reduced by silencer and shield.
     7 m distance: 63～69dBA.

2. Easy Lever Operation
   - Light operating force by pilot operated valve (KX101,151)
   - Tilting wrist lever.
   - Safety lock lever at a touch.

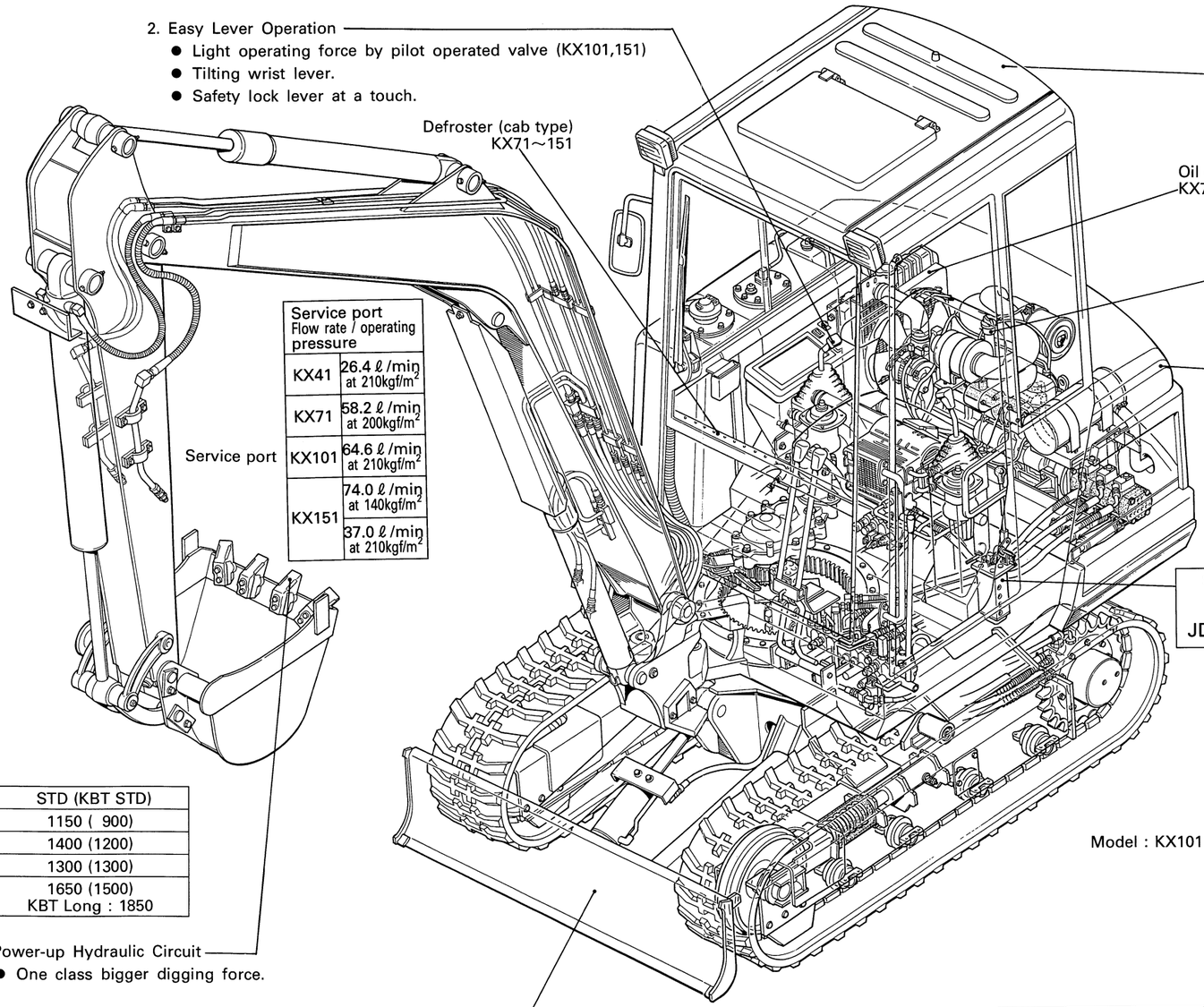

Service port Flow rate / operating pressure	
KX41	26.4 ℓ/min at 210kgf/m²
KX71	58.2 ℓ/min at 200kgf/m²
KX101	64.6 ℓ/min at 210kgf/m²
KX151	74.0 ℓ/min at 140kgf/m²
	37.0 ℓ/min at 210kgf/m²

Arm	STD (KBT STD)
KX41	1150 (900)
KX71	1400 (1200)
KX101	1300 (1300)
KX151	1650 (1500) KBT Long : 1850

3. Power-up Hydraulic Circuit
   - One class bigger digging force.

4. Breaker (Hammer) Application
   - STD service port & control valve.
   - STD large capacity oil cooler.
   - Port relief valve for bucket circuit.
   - Confluence pump flow: KX41～151.

5. Simple Smart Look
   - Urban fit new design & color.
   - FRP Canopy.

6. Compact Swivel Radius, Canopy type
   90 degree swing angle to left and upgrading the boom operating angle by 20° turn up small swivel radius.

Dozer	Type	Width
KX41	std.	960 mm
KX71	Long	1450 mm
KX101	Long	1510 mm
KX151	wide/Long	1990 mm

Iron crawler (width)	
KX41	std. 230 mm
KX71	std. 300 mm
KX101	std. 350 mm
KX151	wide 550 mm (bolt shoe)

Rubber crawler (width)	
KX41	230 mm
KX71	300 mm
KX101	300 mm
KX151	400 mm

KX version for KTC·KCL·KTA
- Lever control : KX41·71 — Mechanical
  KX101·151 — Pilot operated
- Travel speed : KX41·71 — One speed stage
  KX101·151 — Two speed stages
- Arm : KX41～101 — Kubota long arm (KCL , KTA STD)
  Kubota STD arm (KTC STD)
  KX151 — Kubota semi-long arm (KTC , KCL , KTA STD)
- Bucket : KCL,KTA = Kubota STD bucket
  KTC = KTC STD bucket
- Rops/Fops : Applied

7. Confortable Operating Room
   - Spacious cab: 880 → 920mm.
   - Large foot space: 25% up.
     Rops/Fops canopy: KX41～151
     Rops/Fops cab : KX71～151

8. Big Power New TVCS Engine
   - Key stop, all model
     KX41: D1105 (20ps/2400rpm)
     KX61: D1105 (25ps/3000rpm)
     KX71: V1505 (29ps/2600rpm)

9. Reliable Bonnet
   Plank bonnet (1.2→3.2mm plate thickness) and bonnet protector.

10. Excellent Travel Performance
    - High speed for KX101～151 (3.6km/h).
    - Wheel motor with planetary gear reduction.
    <Travelling moter>

KX41 , 71	1st
KX101 , 151	2nd

11. Quick Interchangeable
    Steel and Rubber Tracks.

12. Walk Through Step
    - Able to ride on and off from both sides of the machine.
    - Front hydraulic hoses inside swing bracket.

13. Easy Access Fuel Tank
    Inside to clean
    - Fuel tank cover for cleaning.

14. Customer Satisfaction
    - Super angle; Boom swing L: 90° R: 50° (Appox).
    - One lever operation of swivel or swing.
    - Telescopic arm (Option).

General Specifications

Machine model				KX41	KX71	KX101	KX151
Machine weight (Iron track)	STD arm	R / F Canopy	lb (kgf)	3440 (1560)	6240 (2830)	7935 (3600)	11440 (5190)
		R / F Cab	lb (kgf)	——	6425 (2915)	8125 (3685)	11630 (5275)
	Long arm	R / F Canopy	lb (kgf)	3465 (1570)	6260 (2840)	7980 (3620)	11850 (5375)
		R / F Cab	lb (kgf)	——	6460 (2930)	8180 (3710)	12035 (5460)
	Tele-arm	R / F Canopy	lb (kgf)	3605 (1635)	7155 (3245)	8765 (3975)	——
		R / F Cab	lb (kgf)	——	7340 (3330)	8950 (4060)	——
Machine weight (Rubber track)	STD arm	R / F Canopy	lb (kgf)	3310 (1500)	6085 (2760)	7740 (3510)	10670 (4840)
		R / F Cab	lb (kgf)	——	6275 (2845)	7925 (3595)	10855 (4925)
	Long arm	R / F Canopy	lb (kgf)	3330 (1510)	6110 (2770)	7785 (3530)	11080 (5025)
		R / F Cab	lb (kgf)	——	6305 (2860)	7980 (3620)	11265 (5110)
	Tele-arm	R / F Canopy	lb (kgf)	3475 (1575)	7000 (3175)	8565 (3885)	——
		R / F Cab	lb (kgf)	——	7190 (3260)	8750 (3970)	——
Machine length			in. (mm)	1400 (3555)	177.8 (4515)	196.5 (4990)	217.1 (5515)
Machine height		R / F Canopy	in. (mm)	88.2 (2240)	96.3 (2445)	97.0 (2465)	100.4 (2550)
		R / F Cab	in. (mm)	——	96.5 (2450)	97.2 (2470)	100.6 (2555)
Machine width			in. (mm)	41.5 (1055)	61.4 (1560)	63.3 (1610)	65.7 (1670)
Overall crawler width			in. (mm)	37.8 (960)	57.1 (1450)	59.4 (1510)	78.4 (1990)
Min.ground clearance			in. (mm)	6.7 (170)	11.6 (295)	11.6 (295)	12.4 (315)
Bucket capacity (Standerd)		Struck	cu·ft (m^3)	1.24 (0.035)	2.12 (0.055)	2.82 (0.08)	4.24 (0.12)
		CECE heaped	cu·ft (m^3)	1.4 (0.04)	2.3 (0.065)	3.5 (0.10)	4.9 (0.14)
		SAE heaped	cu·ft (m^3)	1.6 (0.045)	2.6 (0.075)	4.2 (0.12)	5.6 (0.16)
Standard bucket width			in. (mm)	17.7 (450)	18.9 (480)	23.6 (600)	25.6 (650)
Working capacity (45° side ditch)		Cycle time	sec.	9.26	9.21	9.91	11.61
		Work amount	cu·yd (m^3 / h)	36.9 (28.24)	60.3 (46.14)	80.0 (61.20)	102.5 (78.37)
Noise level		At operatior's ear	dB (A)	74.4	74.0	75.0	77.5
		At 7m away	dB (A)	64.7	65.5	67.5	68.5
Boom length			in. (mm)	63.2 (1605)	88.2 (2240)	98.8 (2510)	113.0 (2870)
Arm length / STD			in. (mm)	35.4 (900)	47.2 (1200)	51.2 (1300)	59.1 (1500)
Arm length / Long			in. (mm)	45.3 (1150)	55.1 (1400)	63.0 (1600)	65.0 (1650)
Bucket length (KBT make)			in. (mm)	18.9 (481)	23.4 (594.5)	25.7 (652.5)	30.4 (772.5)
Operating space (Cab)	Max.digging height: STD / L arm		in. (mm)	121.5 (3085) / 126.0 (3200)	165.7 (4210) / 169.3 (4300)	182.3 (4630) / 184.8 (4695)	201.0 (5105) / 203.3 (5165)
	Max.dumping height: STD / L arm		in. (mm)	80.1 (2035) / 84.8 (2155)	116.3 (2955) / 119.9 (3045)	124.6 (3165) / 130.9 (3325)	140.0 (3555) / 142.3 (3615)
	Max.digging depth: STD / L arm		in. (mm)	81.1 (2060) / 90.9 (2310)	105.1 (2670) / 113.0 (2870)	121.3 (3080) / 133.1 (3380)	138.2 (3510) / 144.3 (3665)
	Distance to max. digging depth: STD / L arm		in. (mm)	56.7 (1440) / 56.5 (1435)	74.6 (1895) / 74.2 (1885)	77.8 (1975) / 77.2 (1960)	90.4 (2295) / 89.8 (2280)
	Max.vertical digging depth: STD / L arm		in. (mm)	64.0 (1625) / 73.6 (1870)	76.8 (1950) / 84.6 (2150)	88.0 (2235) / 99.4 (2525)	106.9 (2715) / 112.8 (2865)
	Max.digging reach: STD / L arm		in. (mm)	142.1 (3610) / 151.4 (3845)	182.5 (4635) / 189.6 (4815)	199.4 (5065) / 210.2 (5340)	227.6 (5780) / 233.1 (5920)
	Min.front turning radius: Straight / Swing		in. (mm)	64.8 (1645) / 46.1 (1170)	76.2 (1935) / 55.9 (1420)	85.8 (2180) / 68.7 (1745)	100.4 (2550) / 82.7 (2100)
	Rear end turning radius		in. (mm)	42.9 (1090)	53.1 (1350)	58.5 (1485)	59.6 (1515)
Max.bucket digging force at teeth root			lbw (kgf)	2811 (1275)	5490 (2490)	5941 (2695)	7352 (3335)
Max. arm digging force at teeth root (L. arm)			lbw (kgf)	1720 (780)	3031 (1375)	3880 (1760)	5126 (2325)
Lifting capacity: STD / Long arm			lbw (kgf)	423 (192) /	730 (331) /	974 (442) /	1246 (565) /
Boom swing angle, left / right			degree	90° / 50°	90° / 50°	80° / 43°	80° / 43°
Boom swing moment, left / right			ft·lb (kgf·m)	6299 (871) / 4425 (612)	14135 (1954) / 10602 (1466)	17468 (2415) / 13099 (1811)	35087 (4851) / 24469 (3383)
Body swivel speed			rpm	8.3 / 5.5	8.7 / 5.5	9.4	8.4
Body swivel moment			ft·lb (kgf·m)	1643 (227.2)	3624 (501.1)	5114 (707.0)	7935 (1097.0)
Body swivel capable angle			degree	25≦	25≦	25≦	26≦
Traction force (cab, iron track)			lbw (kgf)	11811 (1633)	23377 (3232)	31030 (4290)	36715 (5076)
Travel speed, high / low			mph (km / h)	1.24 (2.0)	1.3 (2.1)	2.24 (3.6) / 1.18 (1.9)	2.24 (3.6) / 1.12 (1.8)

—— KTC, KCL, KTA Version ——

Machine model					KX41	KX71	KX101	KX151
Dozer	Width×height×length			in. (mm)	37.8×9.8×24.3 (960×250×617)	57.1×15.2×54.3 (1450×308×1380)	59.4×15.2×54.3 (1510×385×1380)	78.3×16.1×54.7 (1990×410×1390)
	Lift above GL×below GL			in. (mm)	6.5×6.9 (165×175)	15.0×19.5 (380×495)	15.2×19.1 (385×485)	16.3×17.9 (415×455)
	Displacement capacity			cu. yd (m^3)	0.08 (0.06)	0.27 (0.215)	0.29 (0.224)	0.436 (0.333)
Undercarriage	Shoe width×link No.			in. (mm)	9.06 (230)×32	11.8 (300)×37	13.8 (350)×43	21.7 (550)×38
	Track shoe length			in. (mm)	53.9 (1370)	69.5 (1766)	81.6 (2072)	95.5 (2425)
	Tumbler distance			in. (mm)	39.8 (1010)	51.2 (1300)	63.0 (1600)	73.2 (1860)
	Track shoe center distance			in. (mm)	28.7 (730)	45.3 (1150)	45.7 (1160)	56.7 (1440)
	Ground contact pressure (Iron track)	STD arm	R / F Canopy	psi (kgf / cm^2)	4.4 (0.31)	4.8 (0.34)	4.3 (0.30)	3.4 (0.24)
			R / F Cab	psi (kgf / cm^2)	——	5.0 (0.35)	4.4 (0.31)	3.4 (0.24)
		Long arm	R / F Canopy	psi (kgf / cm^2)	4.6 (0.32)	4.8 (0.34)	4.3 (0.30)	3.6 (0.25)
			R / F Cab	psi (kgf / cm^2)	——	5.0 (0.35)	4.4 (0.31)	3.6 (0.25)
		Tele-arm	R / F Canopy	psi (kgf / cm^2)	4.7 (0.33)	5.4 (0.38)	4.7 (0.33)	——
			R / F Cab	psi (kgf / cm^2)	——	5.5 (0.39)	4.8 (0.34)	——
	Ground contact pressure (Rubber track)	STD arm	R / F Canopy	psi (kgf / cm^2)	4.3 (0.30)	4.7 (0.33)	4.8 (0.34)	4.3 (0.30)
			R / F Cab	psi (kgf / cm^2)	——	4.8 (0.34)	5.0 (0.35)	4.4 (0.31)
		Long arm	R / F Canopy	psi (kgf / cm^2)	4.3 (0.30)	4.7 (0.33)	4.8 (0.34)	4.6 (0.32)
			R / F Cab	psi (kgf / cm^2)	——	4.8 (0.34)	5.0 (0.35)	4.6 (0.32)
		Tele-arm	R / F Canopy	psi (kgf / cm^2)	4.6 (0.32)	5.4 (0.38)	5.4 (0.38)	——
			R / F Cab	psi (kgf / cm^2)	——	5.5 (0.39)	5.5 (0.39)	——
Engine	Model				D1105-BH	V1505-BH	V1902-BH5	V1902-BH6
	SAE J1349 (Gross)			HP	22.2	32.2	36.6	42.7
	DIN6270NB			PS	20	29	33	39
	Rated Max.Speed			rpm	2400	2600	2450	2800
	Idle Speed			rpm	1000～1200	←	←	←
	Max. torque			ft·lb (kgf·m) / rpm	47.7 (6.6) / 1500	65.8 (9.1) / 1700	84.6 (11.7) / 1500	←
	Bore×stroke			in. (mm)	3.07×3.09 (78×78.4)	←	3.35×3.23 (85×82)	←
	Displacement			cu. in. (cc)	68.5 (1123)	91.4 (1498)	113.5 (1861)	113.5 (1861)
	Fuel cousumption ratio			lb (g) / ps·h	0.42 (190)	0.42 (190)	0.46 (210)	0.46 (210)
Hydraulic system	Pump flow rate		P_1	U.S. gal (ℓ) / min	3.5 (13.2)	7.7 (29.1)	8.5 (32.3)	9.8 (37.0)
			P_2	U.S. gal (ℓ) / min	3.5 (13.2)	7.7 (29.1)	8.5 (32.3)	9.8 (37.0)
			P_3	U.S. gal (ℓ) / min	2.6 (9.8)	4.8 (18.2)	5.6 (21.3)	8.3 (31.4)
			P_4	U.S. gal (ℓ) / min	——	0.89 (3.36)	0.99 (3.76)	1.14 (4.30)
	Main relief pressure setting		a_1	psi. (kgf / cm^2)	2775 (195)	2490 (175)	2275 (160)	2700 (190)
			a_2	psi. (kgf / cm^2)	2985 (210)	2845 (200)	2985 (210)	2985 (210)
			a_3	psi. (kgf / cm^2)	2775 (195)	2275 (160)	2775 (195)	2700 (190)
			a_4	psi. (kgf / cm^2)	——	——	——	1990 (140)
	Travel motor total displacement			cu. in. (cc) / rev	20.6 (338.5)	59.5 (975.2)	73.7 (1208.4) / 38.8 (636)	106.1 (1738.8) / 53.9 (884.1)
	Swivel motor	Displacement		cu. in. (cc) / rev	11.9 (195)	1.00 (16.4)	1.00 (16.4)	1.42 (23.3)
		Relief pressure		psi. (kgf / cm^2)	1705 (120)	2135 (150)	2885 (203)	2885 (203)
Hydraulic system	Service port	Flow rate		U.S. gal (ℓ) / min	6.97 (26.4)	15.4 (58.2)	17.1 (64.6)	19.6 (74.0) ¦ 9.78 (37.0)
		Operating pressure		psi. (kgf / cm^2)	2985 (210)	2845 (200)	2985 (210)	1990 (140) ¦ 2985 (210)
	Cylinder Bore×rod dia. ×stroke	Boom		in. (mm)	2.17×1.18×15.20 (55×30×386)	3.15×1.57×18.98× (80×40×482)	3.54×1.77×21.5 (90×45×547)	3.94×2.17×27.8 (100×55×706)
		Arm		in. (mm)	2.17×1.18×16.3 (55×30×415)	2.76×1.57×22.76 (70×40×578)	3.15×1.79×24.9 (80×45×632)	3.54×2.17×30.0 (90×55×770)
		Bucket		in. (mm)	2.17×1.18×11.3 (55×30×286)	2.96×1.77×14.72 (75×45×374)	2.76×1.57×19.3 (70×40×490)	2.96×1.77×23.0 (75×45×585)
		Swing		in. (mm)	2.17×1.18×14.2 (55×30×360)	3.15×1.57×18.31 (80×40×465)	←	3.94×2.17×23.9 (100×55×607)
		Dozer		in. (mm)	2.76×1.38×2.99 (70×35×76)	3.54×1.77×5.71 (90×45×145)	←	3.94×2.36×6.89 (100×60×175)
	Oil cooler capacity, Code No.			kcal / h	2230 68191-93511	4600 68391-93511	←	←
Fuel, coolant & lubricant	Fuel tank			U.S. gal (ℓ)	6.34 (24.0)	15.06 (57.0)	15.06 (57.0)	17.44 (66.0)
	Coolant			U.S. gal (ℓ)	1.06 (4.0)	1.32 (5.0)	2.11 (8.0)	2.11 (8.0)
	Engine			U.S. gal (ℓ)	1.06 (4.0)	1.40 (5.3)	1.98 (7.5)	1.98 (7.5)
	Final drive (each side)			U.S. gal (ℓ)	0.07 (0.25)	0.13 (0.5)	0.16 (0.6)	0.32 (1.2)
	Swivel drive			U.S. gal (ℓ)	——	0.34 (1.3)	0.34 (1.3)	0.58 (2.2)
	Hydraulic tank			U.S. gal (ℓ)	1.58 (6.0)	5.28 (20.0)	6.60 (25.0)	10.57 (40.0)

[2] Sales Feature

Sales Feature 1
Low Noise

Low noise machine is most required in urban use.
Comfortable exhaust & inlet sound are achieved by the inlet and exhaust silencer, silence cover etc.

(Measured data at Max. speed of unloaded engine)

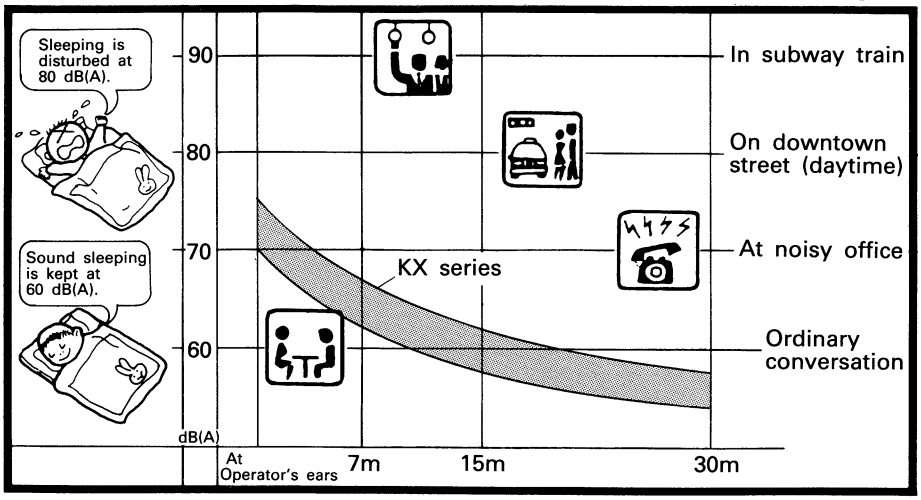

Noise Level comparison
at operator's ear

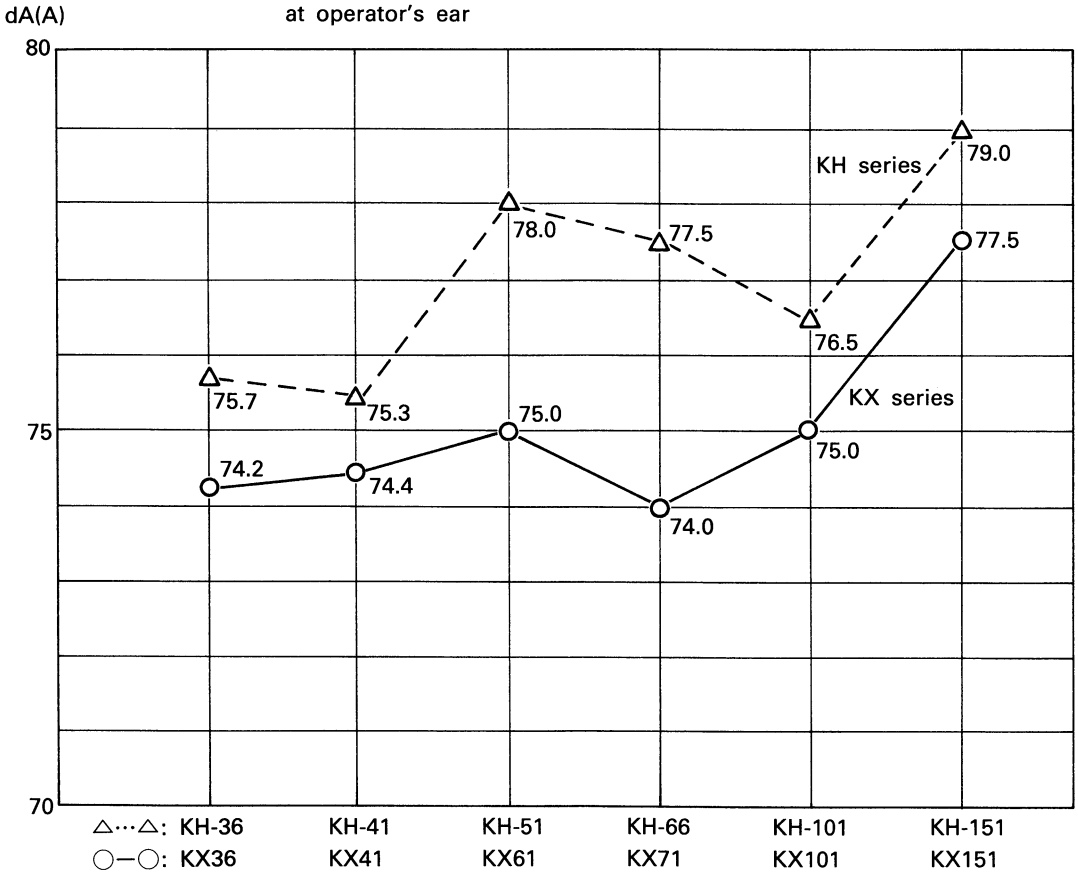

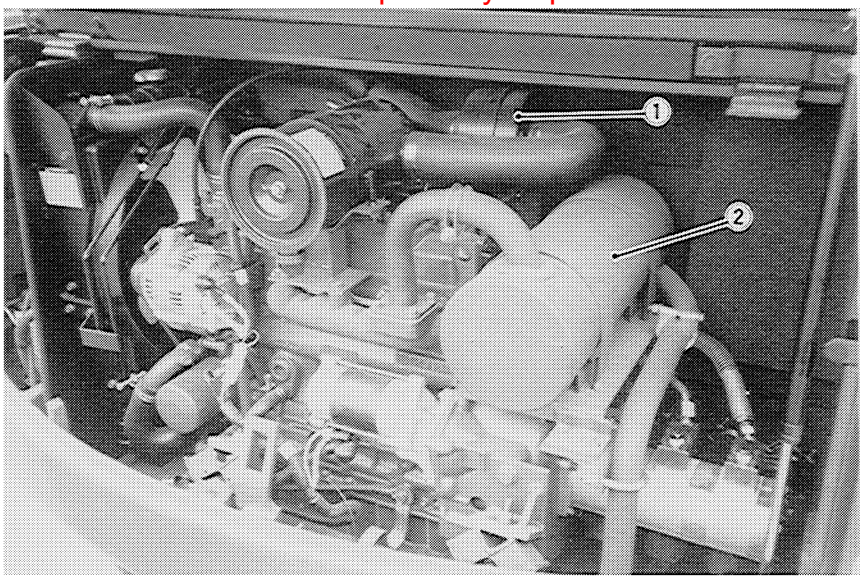

<KX71>

① Inlet silencer ② Exhaust Silencer

(1) Resonant inlet silencer
Reduces air suction noise heard from the engine inlet port.

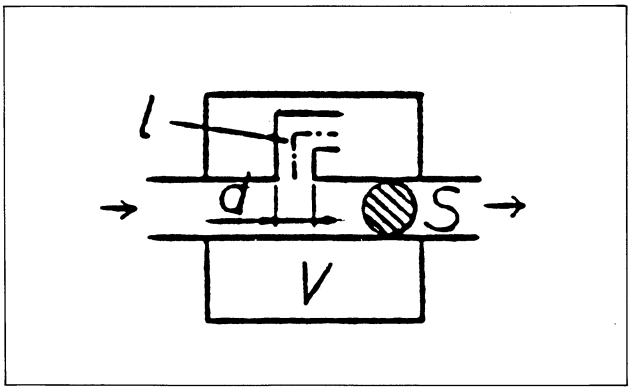

(2) Resonant silencer
Reduces exhaust noise heard when exhaust gas is emitted out of the engine exhaust port.
Analyzes noise frequencies to pick out and cut down on hard-to-reduce low-frequency noises at its resonating section.

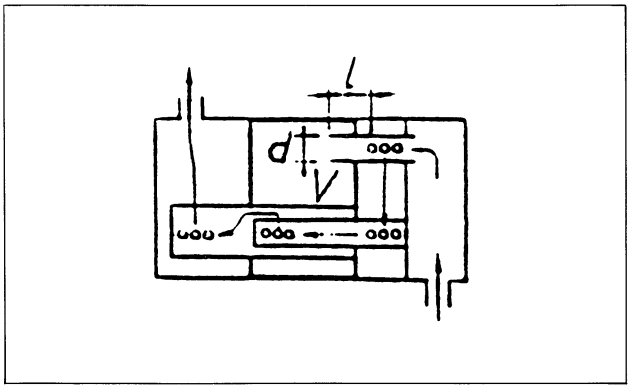

(3) Noise enclosure
Operating noises are reduced by performing noise absorption or insulation measures on their sources.
- Openings of the noise emitting parts are made as narrow as the heat balance allows.
- Noise insulating plate is used for the opening of the bonnet.
- Noise absorbing material is adopted inside the bonnet to improve the noise absorption ratio.

(4) Operating noises have been made softer than before by adopting the F-type radiator fan and improving the hydraulic system noise to cut down on high-frequency noises.

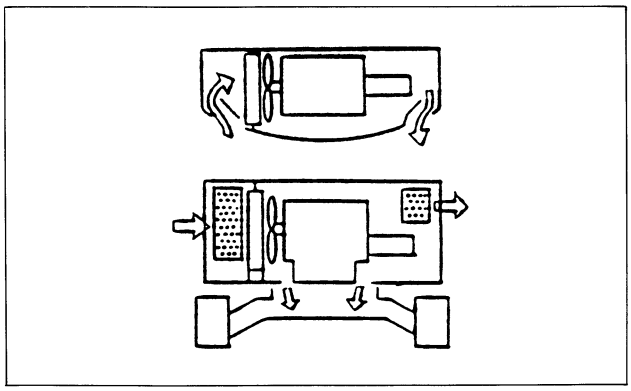

Sales Feature 2

Small turning radius

Small turning radius for confined area.
Larger boom operating angle.

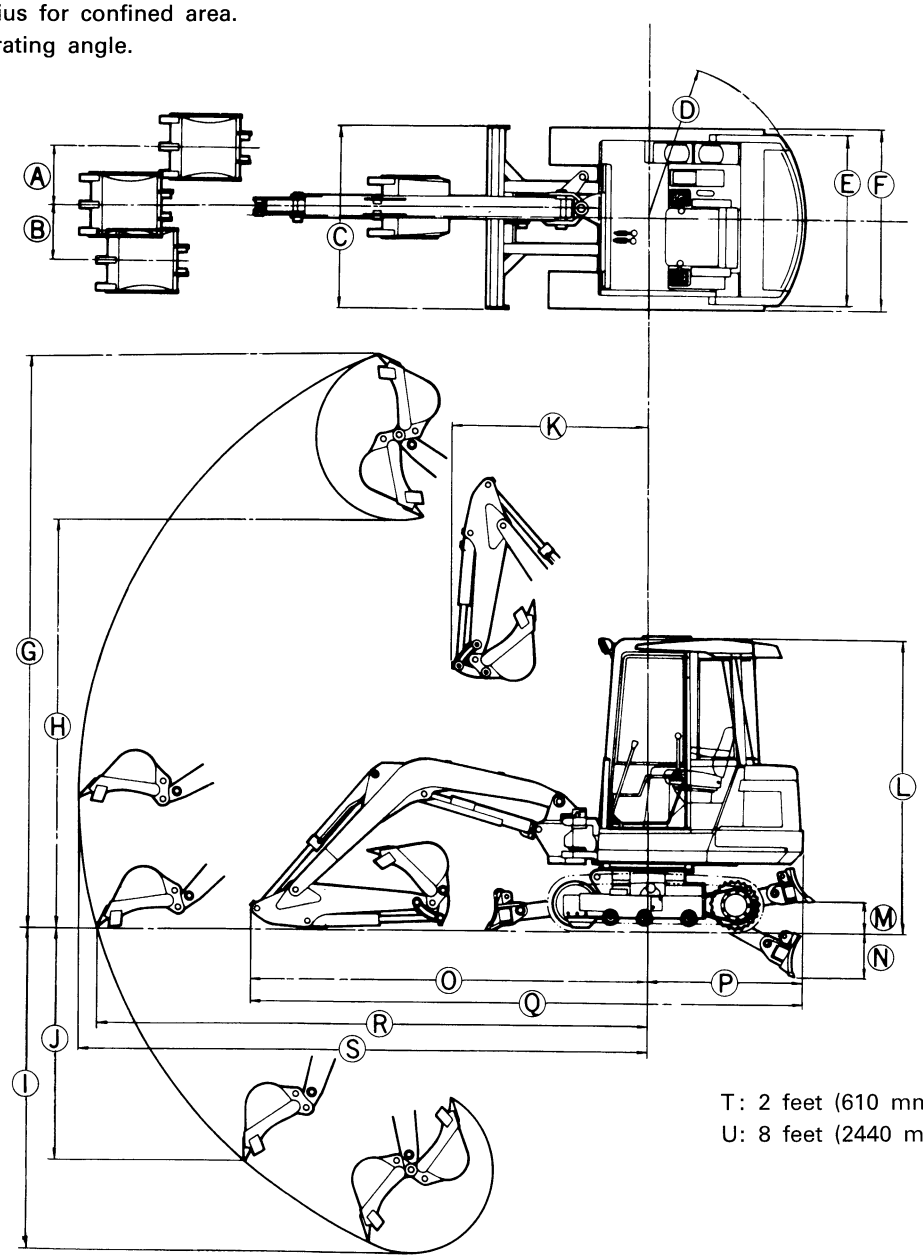

T: 2 feet (610 mm) flat bottom
U: 8 feet (2440 mm) flat bottom

〈Type of Arm & Bucket〉

Distributor	Model	Arm	Bucket
KDG, KE KUK, EKSA	KX36～KX151	KBT STD arm	KBT STD bucket
KTC	KX41～KX101	KBT STD arm	KTC make bucket
	KX151	KBT semi-long arm ℓ=1650	
KCL KTA	KX41～KX101	KBT long arm	KCL make bucket
	KX151	KBT semi-long arm ℓ=1650	KBT STD bucket

KX SERIES OPERATING SPACE

MODEL	ARM LENGTH	A	B	C	D	E	F	G	H	I	J	K	M	N	O	P	Q	R	S	T	U
KX36	STD:750	18.4 (450)	17.3 (425)	38.0 (930)	44.5 (1090)	43.1 (1055)	38.0 (930)	123.7 (3030)	80.6 (1975)	78.0 (1910)	61.2 (1500)	66.9 (1640)	6.7 (165)	7.1 (175)	100.0 (2450)	43.7 (1070)	143.7 (3520)	137.3 (3365)	141.8 (3475)	76.3 (1870)	47.3 (1160)
	LONG:1150	↑	↑	↑	↑	↑	↑					↑	↑	↑	↑	↑	↑				
	TEL:1255	↑	↑	↑	45.5 (1115)	↑	↑	128.8 (3155)	87.8 (2150)	98.8 (2420)	72.2 (1770)	71.2 (1745)	↑	↑				156.9 (3845)	160.6 (3935)		
KX41	STD:900	18.4 (450)	17.3 (425)	39.2 (960)	44.5 (1090)	43.1 (1055)	39.2 (960)	125.9 (3085)	83.1 (2035)	84.1 (2060)	66.3 (1625)	67.1 (1645)	6.7 (165)	7.1 (175)	101.4 (2485)	43.7 (1070)	145.1 (3555)	143.1 (3505)	147.3 (3610)	82.7 (2025)	57.1 (1400)
	LONG:1150	↑	↑	↑	↑	↑	↑	130.6 (3200)	88.0 (2155)	94.3 (2310)	76.3 (1870)	71.8 (1760)	↑	↑	↑	↑	↑	153.1 (3750)	156.9 (3845)	93.1 (2280)	71.2 (1745)
	TEL:1255	↑	↑	↑	45.5 (1115)	↑	↑	127.8 (3130)	86.9 (2130)	98.8 (2420)	72.2 (1770)	71.2 (1745)	↑	↑				156.9 (3845)	160.6 (3935)	95.7 (2345)	78.2 (1915)
KX61	STD:1050	19.0 (465)	17.6 (430)	57.1 (1400)	51.0 (1250)	55.1 (1350)	57.1 (1400)	166.7 (4085)	114.5 (2805)	96.9 (2375)	72.7 (1780)	74.9 (1835)	13.7 (335)	15.7 (385)	122.2 (2995)	50.4 (1235)	172.7 (4230)	171.8 (4210)	178.0 (4360)	95.7 (2345)	72.9 (1785)
	LONG:1300	↑	↑	↑	↑	↑	↑	172.0 (4215)	119.8 (2935)	107.1 (2625)	82.7 (2025)	75.9 (1860)	10.0 (255)	14.2 (360)				181.6 (4450)	187.3 (4590)	106.1 (2600)	85.9 (2105)
	TEL:1635	↑	↑	↑	55.1 (1350)	↑	↑	166.7 (4085)	119.6 (2930)	120.8 (2960)	65.3 (1600)	78.6 (1925)	↑	↑				192.2 (4710)	197.6 (4840)	120.0 (2940)	103.3 (2530)
KX71	STD:1200	19.0 (465)	17.6 (430)	59.2 (1450)	55.1 (1350)	63.7 (1560)	59.2 (1450)	171.8 (4210)	120.6 (2955)	109.0 (2670)	79.6 (1950)	79.0 (1935)	15.5 (380)	20.2 (495)	129.8 (3180)	54.5 (1335)	184.3 (4515)	183.5 (4495)	189.2 (4635)	108.0 (2645)	87.1 (2135)
	LONG:1400	↑	↑	↑	↑	↑	↑	175.5 (4300)	124.3 (3045)	117.1 (2870)	87.8 (2150)	82.0 (2010)	10.0 (255)	14.2 (360)				191.2 (4685)	196.5 (4815)	116.3 (2850)	97.3 (2385)
	TEL:1635	↑	↑	↑	55.3 (1355)	↑	↑	170.4 (4175)	123.1 (3015)	126.5 (3100)	73.7 (1805)	81.2 (1990)	↑	↑				198.0 (4850)	203.3 (4980)	125.7 (3080)	109.4 (2680)
KX101	STD:1300	19.0 (465)	15.9 (390)	61.6 (1510)	60.6 (1485)	65.7 (1610)	61.6 (1510)	189.0 (4630)	129.2 (3165)	125.7 (3080)	91.2 (2235)	86.5 (2120)	15.7 (385)	19.8 (485)	143.1 (3505)	60.6 (1485)	203.7 (4990)	201.4 (4935)	206.7 (5065)	124.9 (3060)	105.9 (2595)
	LONG:1600	↑	↑	↑	↑	↑	↑	191.6 (4695)	135.7 (3325)	138.0 (3380)	103.1 (2525)	88.6 (2170)	10.2 (260)	13.8 (350)				213.1 (5220)	218.0 (5340)	137.1 (3360)	120.4 (2950)
	TEL:2000	↑	↑	↑	↑	↑	↑	188.8 (4625)	134.5 (3295)	154.5 (3785)	108.8 (2665)	93.3 (2285)						226.3 (5545)	230.8 (5655)	153.9 (3770)	140.4 (3440)
KX151	STD:1500	21.6 (530)	16.7 (410)	75.1 (1840)	61.8 (1515)	68.2 (1670)	75.1 (1840)	208.4 (5105)	145.1 (3555)	143.3 (3510)	110.8 (2715)	104.1 (2550)	16.9 (415)	18.6 (455)	163.5 (4005)	61.6 (1510)	225.1 (5515)	230.0 (5635)	235.9 (5780)	142.4 (3490)	125.3 (3070)
	SEMI-LONG:1650	↑	↑	81.2 (1990)	↑	↑	81.2 (1990)	210.8 (5165)	147.6 (3615)	149.6 (3665)	116.9 (2865)	105.1 (2575)	12.2 (310)	14.2 (360)				235.7 (5775)	241.6 (5920)	148.8 (3645)	132.7 (3250)
	LONG:1850	↑	↑	↑	↑	↑	↑	214.5 (5255)	151.2 (3705)	157.6 (3860)	124.9 (3060)		↑	↑				243.5 (5965)	249.2 (6105)	156.9 (3845)	141.6 (3470)

T: 2 feet (610 mm) flat bottom, U: 8 feet (2440 mm) flat bottom.

Super swing angle

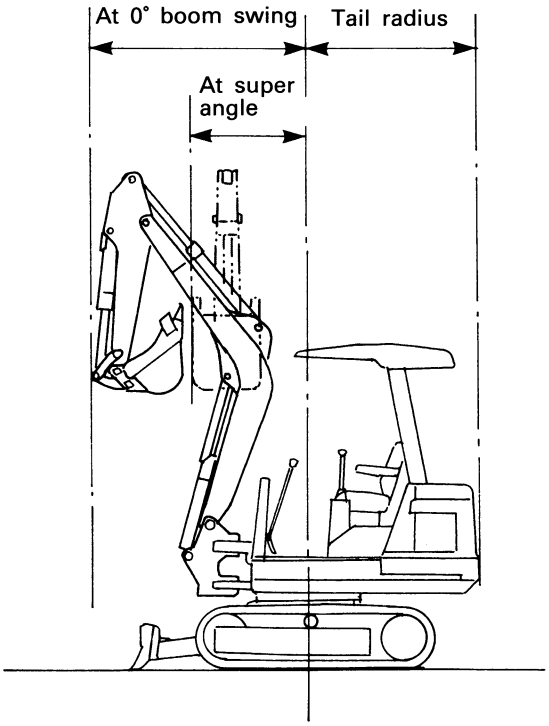

◆ Comparison with competiter

Left boom swing

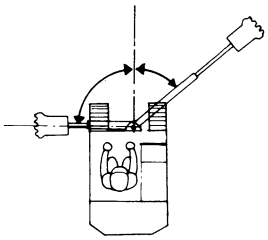

Right swing

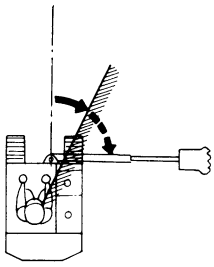

★ The operators enjoy a better view of the bucket position and the excavation site with wide boom swing to the left.

★ The fuel tank and other parts may obstruct the operator's view.

Model	Spec. Arm	Swing angle Left	Swing angle Right	Min. turning radius [mm] At 0° swing angle	Min. turning radius [mm] At super swing	Min. rear swing radius [mm]
KX36	STD	90°	50°	1640	1170	1090
KX41	STD			1645	1170	
	Long			1610	1175	
KX61	STD	90°	48°	1835	1330	1250
KX71	STD	90°	48°	1935	1420	1350
	Long			1935	1455	
KX101	STD	80°	43°	2170	1685	1485
	Long			2160	1750	
KX151	STD	80°	43°	2550	2100	1515
	Semi-Long			2515	2080	

Applications for the super swing angle mechanism

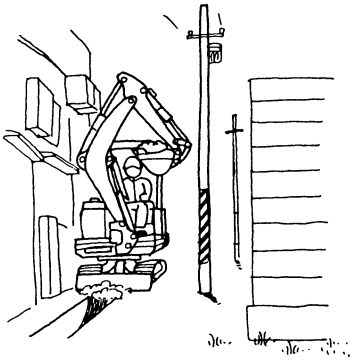

● Confined area
Small turning radius allows the swivel in confined area.

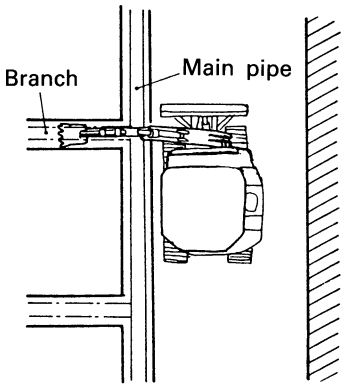

● Removing branch pipe
Ditching for branch pipe removal is possible without turning the machine direction.

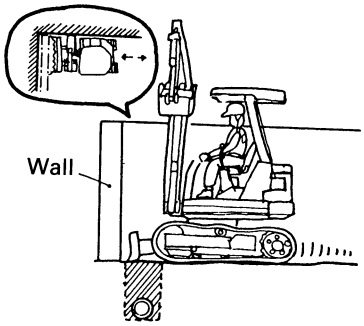

● Backfilling close to wall
Backfilling close to wall and corners is possible without turning the machine direction.

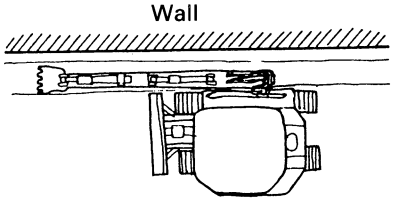

● Digging along wall
Sufficient offset allows the machine to dig along a wall.

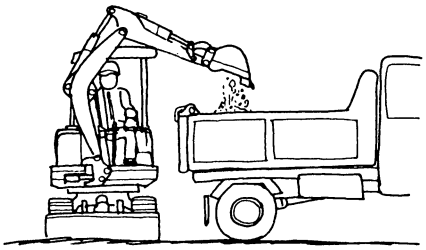

● Dumping onto dump truck
Ample bucket dump height allows efficient dumping onto dump truck.

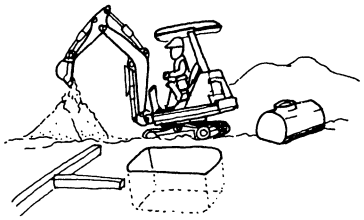

● Embedding sewage disposal tank
Ample vertical digging depth allows efficient embedding of a sewage disposal tank.

Sales Feature 3

Interchangeable between steel and rubber tracks

Easy to interchange the steel tracks and rubber trackes to fit the job site condition.

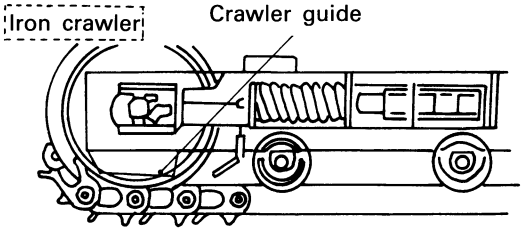

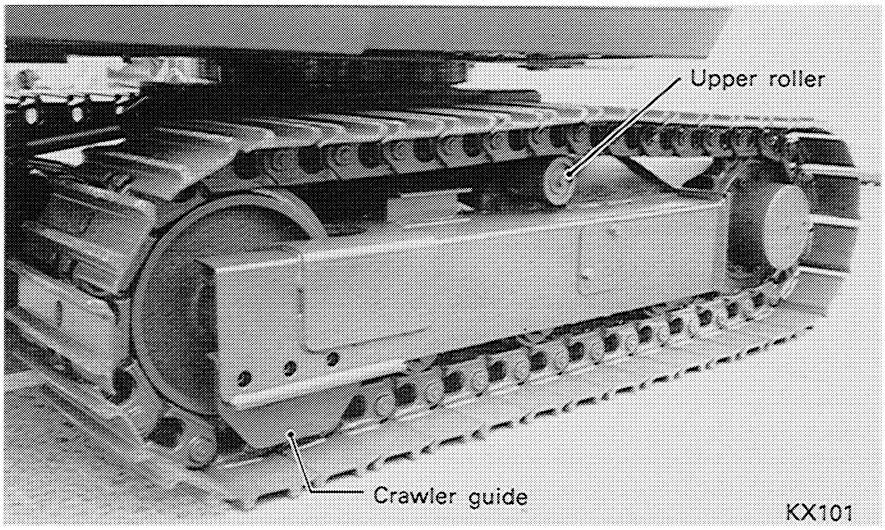

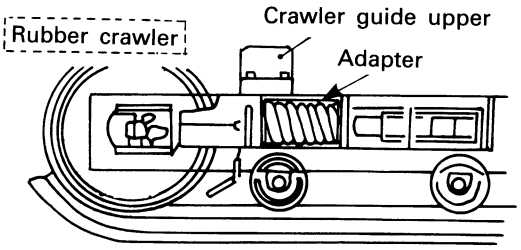

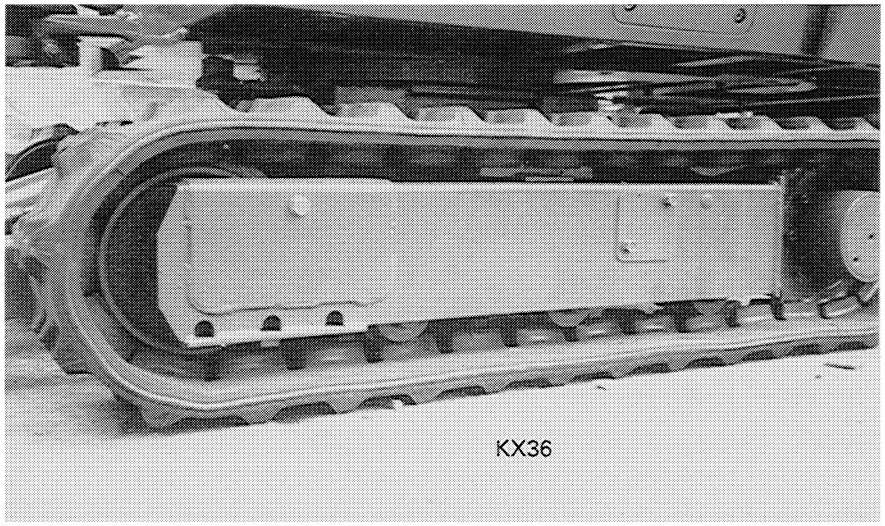

Sales Feature 4

Power-up hydraulic circuit (KX41～151)

Digging force and traction force increase by this circuit.

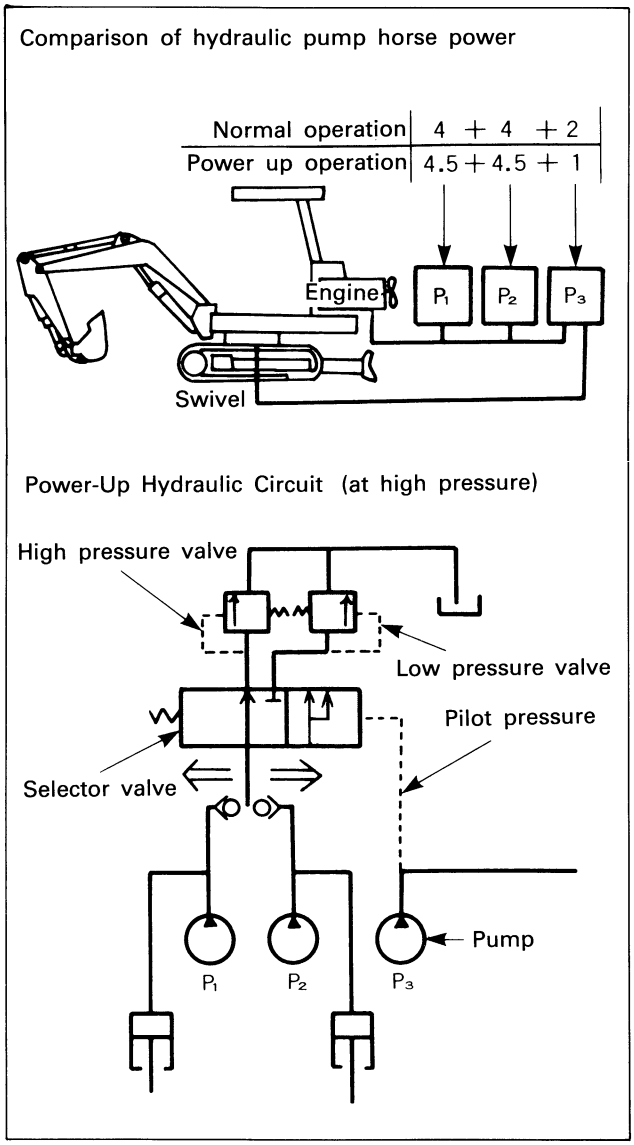

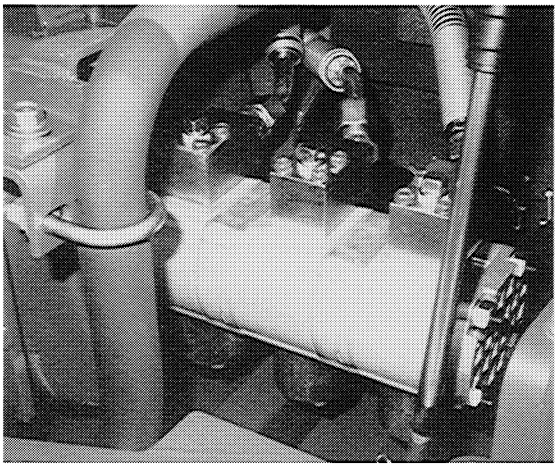

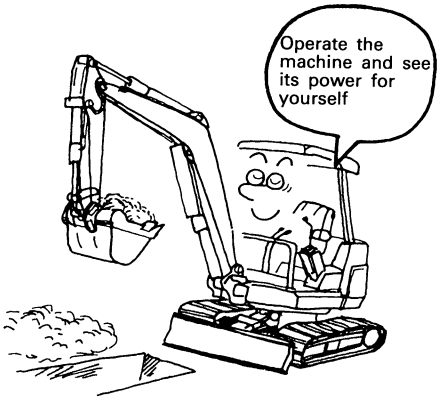

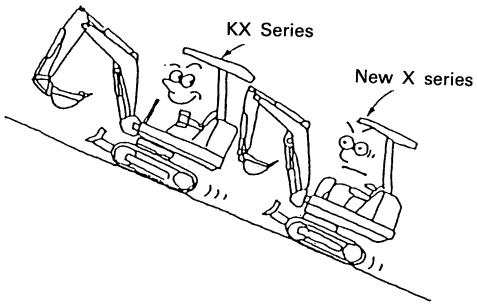

Digging Force

Fp=Fn×P2 / P1 Fp: When power up; P2 Fn: When normal pressure; P1

Model					KX36	KX41	KX61	KX71	KX101	KX151
STD Arm L				in (mm)	29.5 (750)	35.4 (900)	41.3 (1050)	47.2 (1200)	51.2 (1300)	59.1 (1500)
STD Arm Digging force	Normal	Bucket	tooth tip	lbw (kgf)	———	2315 (1050)	3340 (1515)	4674 (2120)	5148 (2335)	6625 (3005)
			tooth root	lbw (kgf)	———	2811 (1275)	3924 (1780)	5490 (2490)	5491 (2695)	7352 (3335)
		Arm	tooth tip	lbw (kgf)	———	1863 (845)	2853 (1270)	3164 (1435)	4233 (1920)	5666 (2570)
			tooth root	lbw (kgf)	———	1984 (900)	2943 (1335)	3318 (1505)	4420 (2005)	5842 (2650)
	Power-up	Bucket	tooth tip	lbw (kgf)	2260 (1025)	2150 (975)	3031 (1375)	4090 (1855)	3924 (1780)	5997 (2720)
			tooth root	lbw (kgf)	2745 (1245)	2612 (1185)	3571 (1620)	4806 (2180)	4530 (2055)	6647 (3015)
		Arm	tooth tip	lbw (kgf)	1676 (760)	1731 (785)	2546 (1155)	2767 (1255)	3230 (1465)	5126 (2325)
			tooth root	lbw (kgf)	1797 (815)	1841 (835)	2679 (1215)	2899 (1315)	3373 (1530)	5291 (2400)
Long Arm L				in (mm)	45.3 (1150)	45.3 (1150)	51.2 (1300)	55.1 (1400)	63.0 (1600)	72.8 (1850)
L, Arm	Dig force	Power-up	tooth tip	lbw (kgf)	———	1631 (740)	2491 (1130)	2899 (1315)	3737 (1695)	4993 (2265)
			tooth root	lbw (kgf)	———	1720 (780)	2601 (1180)	3031 (1375)	3880 (1760)	5126 (2325)
		Normal	tooth tip	lbw (kgf)	1323 (600)	1510 (685)	2260 (1025)	2535 (1150)	2844 (1290)	4519 (2050)
			tooth root	lbw (kgf)	1389 (630)	1598 (725)	2370 (1075)	2657 (1205)	2954 (1340)	4641 (2105)
P_1				psi (kgf / cm^2)	2915 (205)	2775 (195)	2135 (150)	2490 (175)	2275 (160)	2700 (190)
P_2				psi (kgf / cm^2)	2915 (205)	2985 (210)	2345 (165)	2845 (200)	2985 (210)	2985 (210)

Sales Feature 5

Easy to operate

Tilting wrist lever

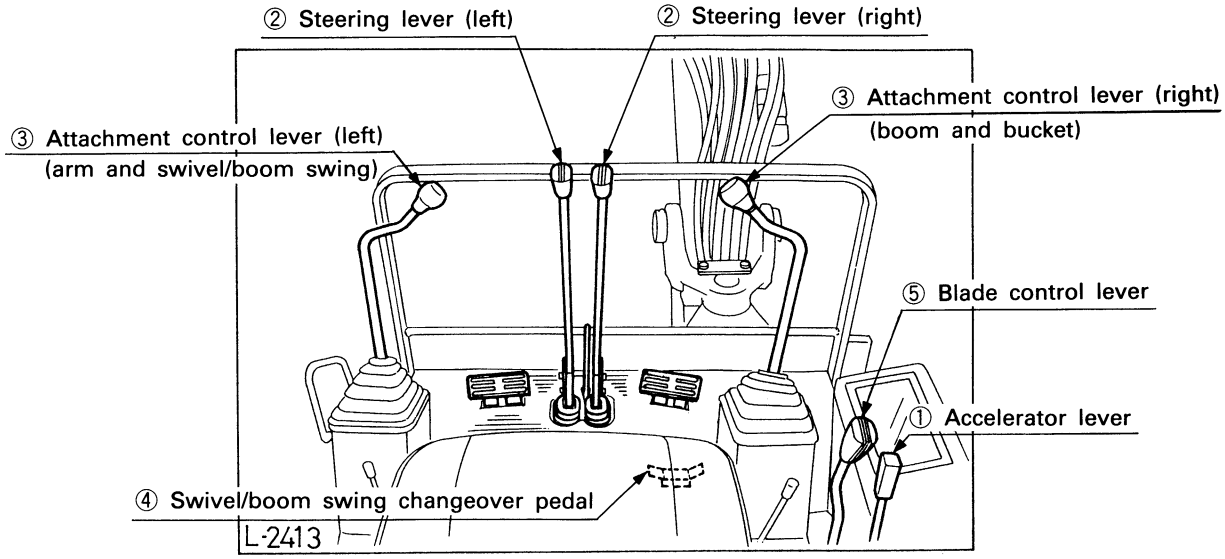

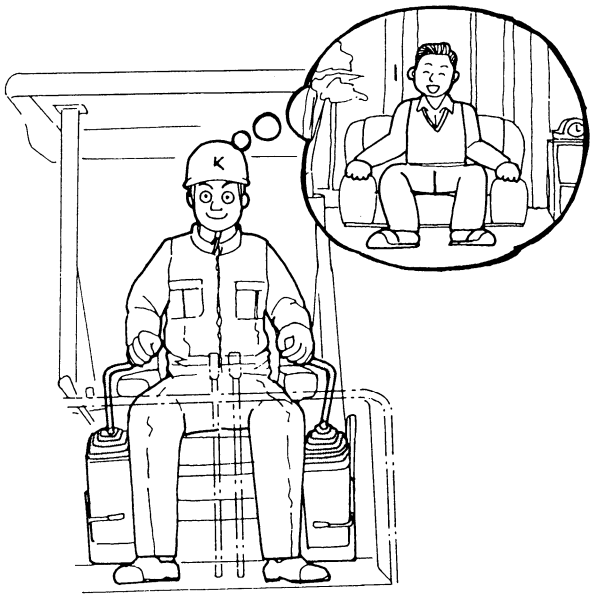

◆ Comparison with competiters

		lever position	Angle adjustment
KUBOTA	KX36~KX151	Wrist lever	Tilting lever
KOMATSU	PC10-6, PC15-2 PC20-6, PC30-6	Front lever	No
YANMER	B22-P, YB231-2 B27-P, B37-P	Front lever	No
IHI	IS25GX, IS27GX	Front lever	No
	IS30GX	Wrist lever	No
KOBELCO	SK-024, SK-027	Front lever	No

Operating lever system

Control sistem	KDG , KE , KUK , EKSA	KTC , KCL , KTA
Mechanical (wire-link) control system	KX36	KX41, 71
Pirot remote control system	KX41～151	KX101, 151

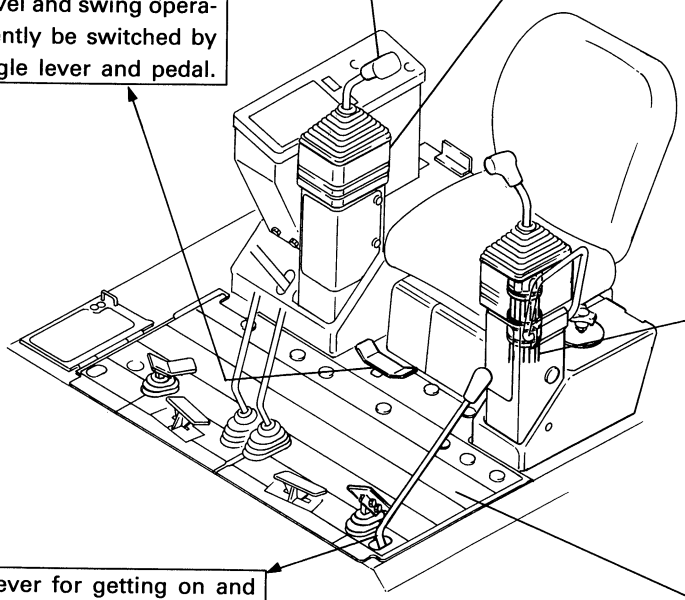

★ 1. Less operating force and shorter stroke

The short stroke requires light operating force to keep your hand little tired.

2. Tilting operating lever

Adjustable to the optimum operating position in accordance with the operator's physique.

7. Swivel and swing operations switchable by pressing a pedal

Just as in the case of the mechanical system, the swivel and swing operations can efficiently be switched by operating a single lever and pedal.

3. Easy-to-change operating pattern

The operating pattern can be changed into those of other manufacturers' models just by replacing the pilot circuit hose.

6. Safety lock lever for getting on and off the machine safety

This red lever, when pushed toward front, lets the linkage disable the hydraulic system to prevent the operating lever from activating the front parts.

4. Space enough for the operator to get on and off the machine

The tiltable lever stand provides space enough for the operator to get on and off the machine.

Adjustable swivel speed mechanism
(KX41, KX71 KTC,KCL,KTA)

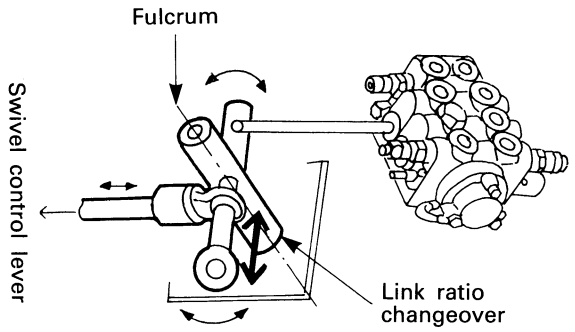

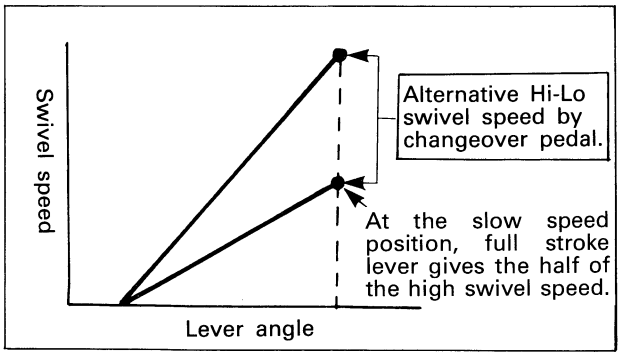

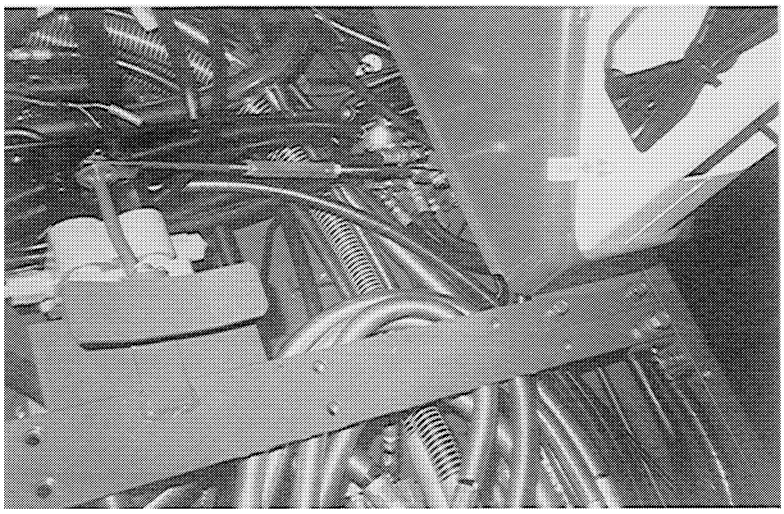

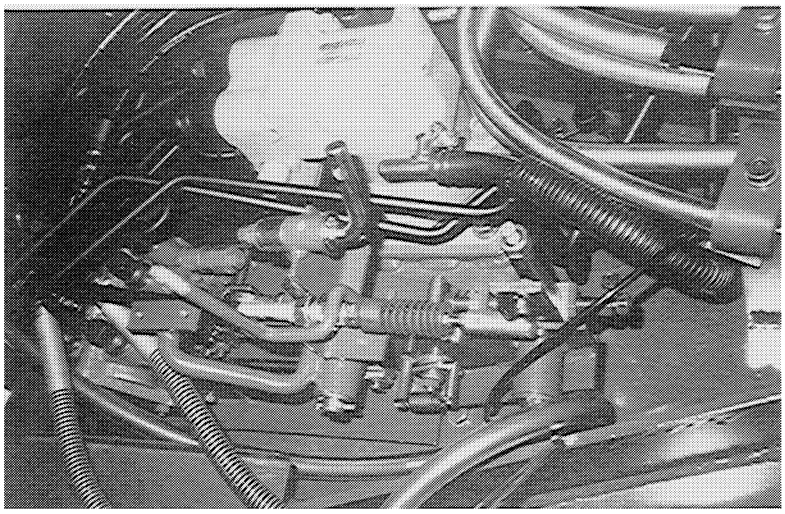

Sales Feature 6

Big power new TVCS engine

Installation of New TVCS combustion type engine
KX36: D662 (13.5 ps/2800 rpm) KX61: D1105 (25 ps/3000 rpm)
KX41: D1105 (20 ps/2400 rpm) KX71: V1505 (29 ps/3000 rpm)

■ Installation of New TVCS combustion type engine

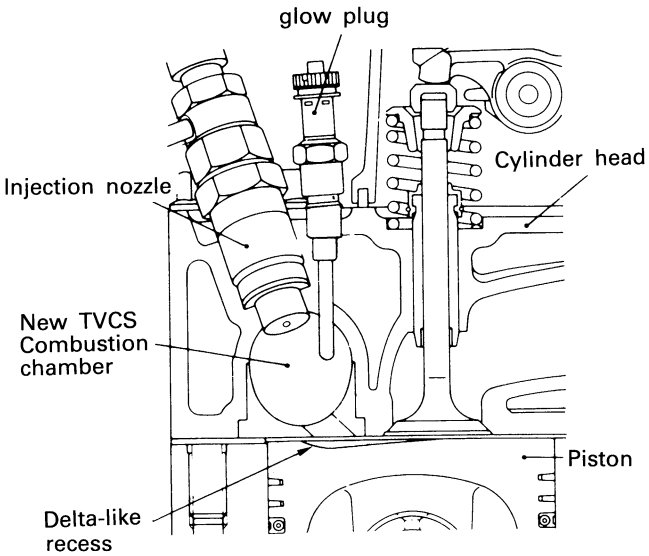

New TVCS Combustion Chamber (at compressing)

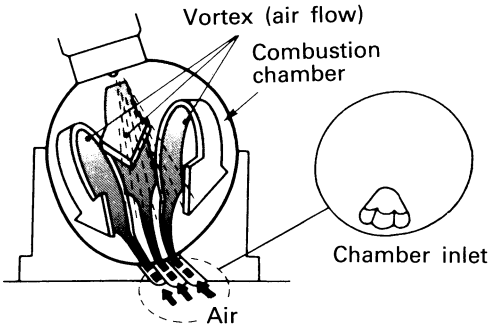

Top of piston (at combustion)

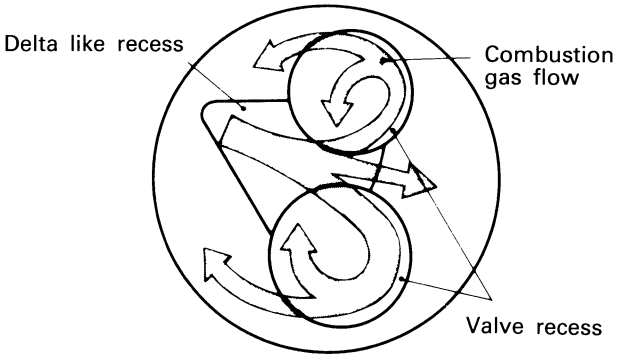

■ Super glow plug and glow lamp (5 sec. turn-off) are standard installation on all model

■ New govenor control to high torque

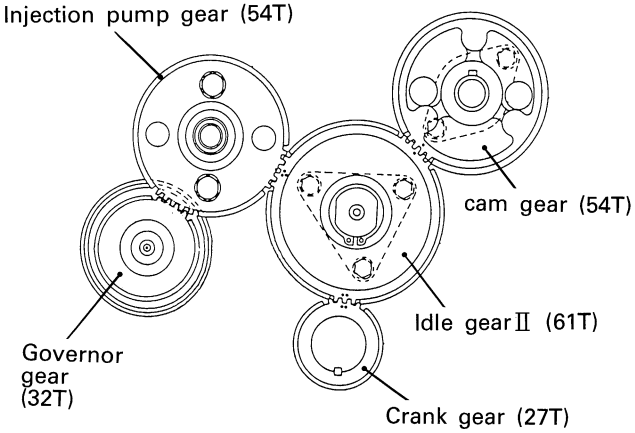

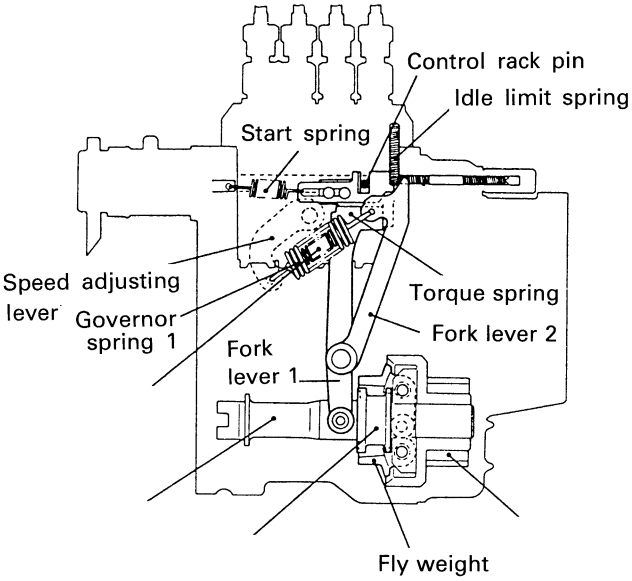

Engine output curve ——— Kubota
- - - - - Competitor

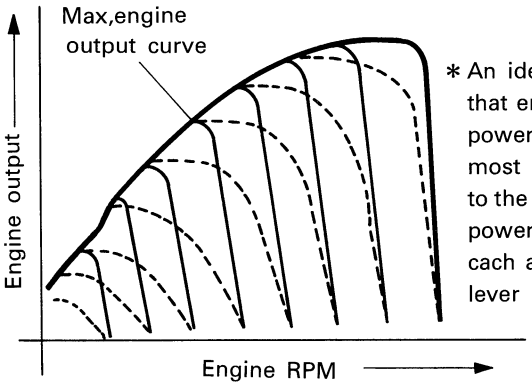

* An ideal engine that ensures the power curve almost equivalent to the maximum power curve at each accelerator lever position.

Sales Feature 7

Walk through step

Able to get on and off from both sides of the machine.
Large foot space and comfortable operator cab.
Foot space enlarged approx. 25% larger than previous model.
Front hydraulic hoses inside swing bracket/ Tilting wrist lever

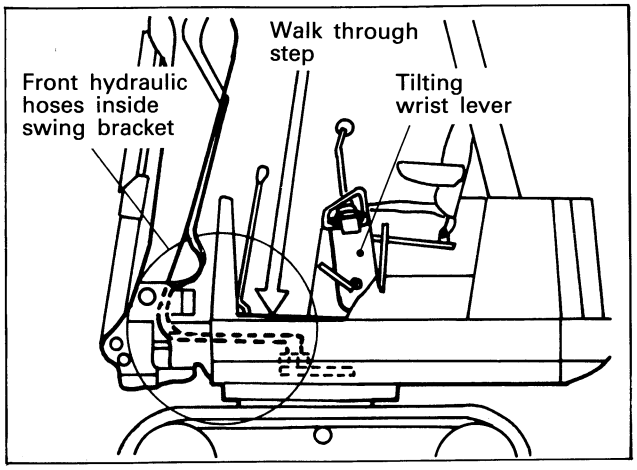

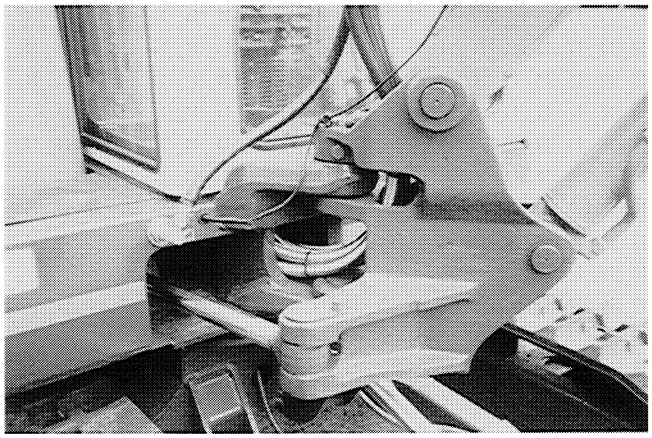

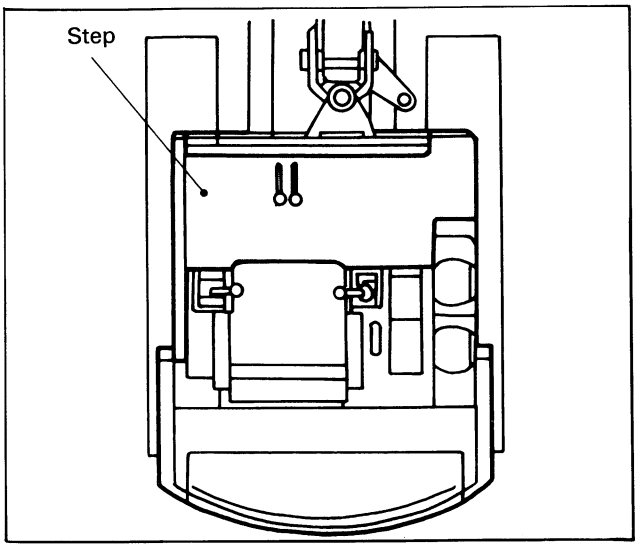

◆ Comparison with competiters

		Control lever position	Tilting
KUBOTA	KX36~KX151	● Wrist lever	● Tilting
A	PC05-6, PC07 PC10-6, PC15-2 PC20-6, PC30-6 PC40-6	● Front stand lever	● Non tilting
B	B05-6, B07 B22-P, YB231-2 B27-P, B37-P B50-P	● Front stand lever	● Non tilting
S	IS10GX, IS14GX IS25GX, IS27GX	● Front stand lever	● Non tilting
	IS30GX, IS35GX IS40GX	● Wrist lever	● Non tilting
U	SK-014, SK-024 SK-027, SK-032 SK-042	● Front stand lever	● Non tilting

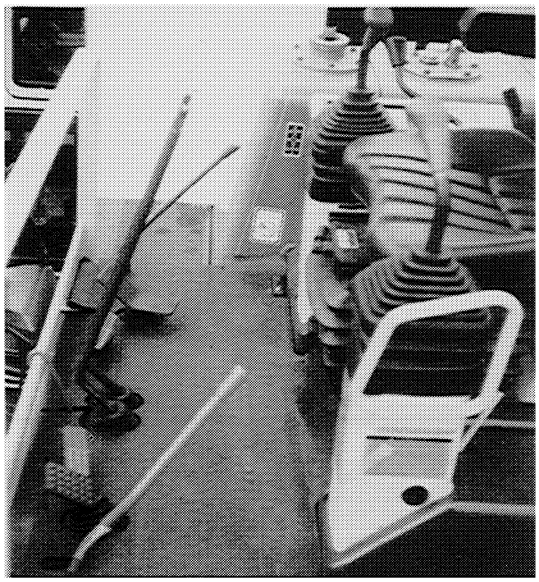

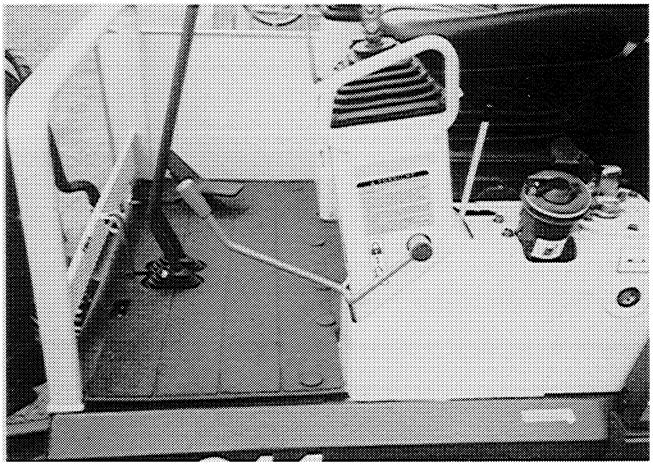

Sales Feature 8

Standard service port valve

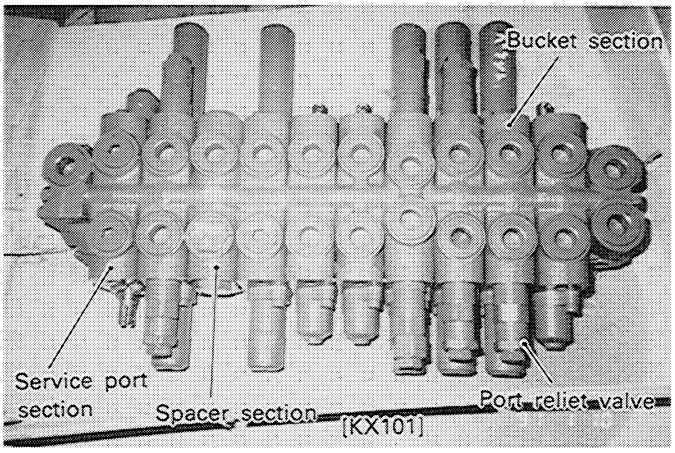

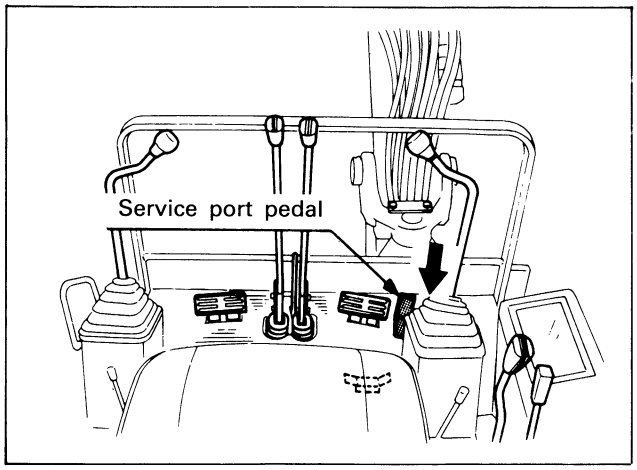

Machine model	KX36	KX41	KX61	KX71	KX101	KX151
Engine out put ps/RPM	13.5/2800	20/2400	25/3000	29/2600	33/2450	39/2800
Engine torque kgf·m/RPM	3.8/1900	6.6/1500	6.6/1700	9.1/1700	11.7/1500	11.7/1500
Service port Flow rate/operating pressure	22.4 ℓ/min at 205kgf/m^2	26.4 ℓ/min at 210kgf/m^2	56.5 ℓ/min at 165kgf/m^2	58.2 ℓ/min at 200kgf/m^2	64.6 ℓ/min at 210kgf/m^2	74.0 ℓ/min at 140kgf/m^2 37.0 ℓ/min at 210kgf/m^2
Combined pump	P_1+P_2	P_1+P_2	P_1+P_2	P_1+P_2	P_1+P_2	P_1+P_2
Bucket overload pressure	230kgf/m^2	←	245kgf/m^2	←	←	←

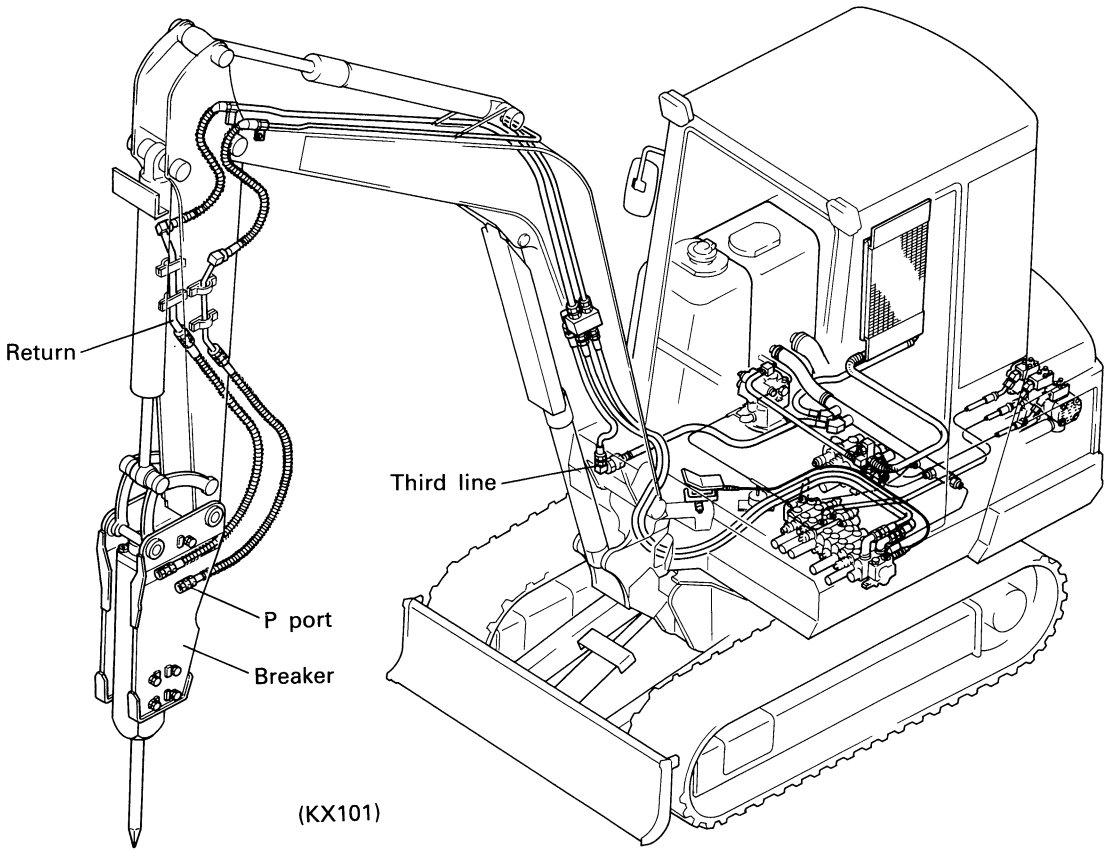

Sales Feature 9

New and simple design for urban use

Color and design matching the city environments.
Hard plastic canopy.

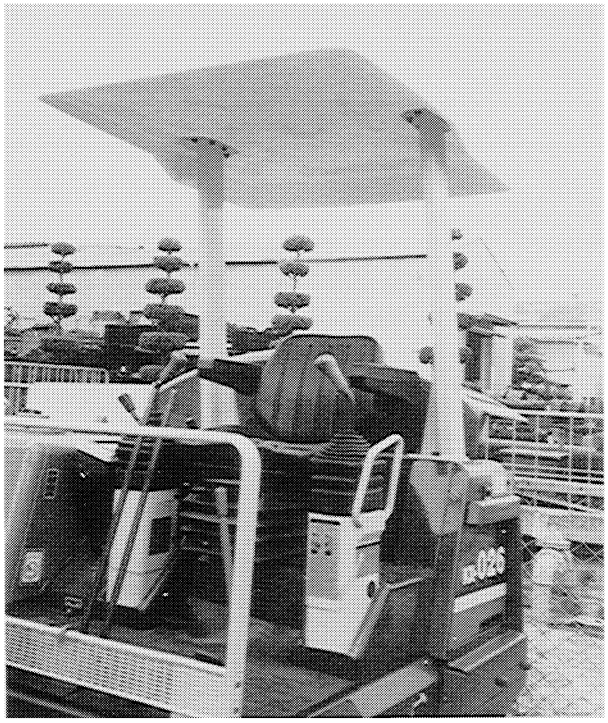

Sales Feature 10

Reliability and safety

Bonnet protector with plank, plank frame at rear bonnet

① Dozer cylinder protector
② Bucket cylinder protector
③ Boom cylinder protector

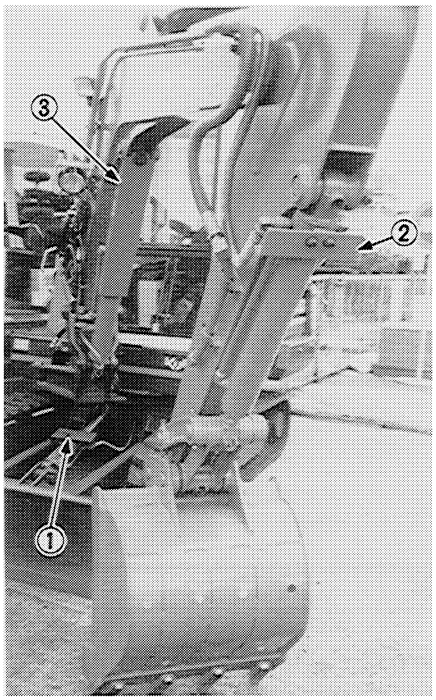

Sales Feature 11

Easy to clean the inside of fuel tank

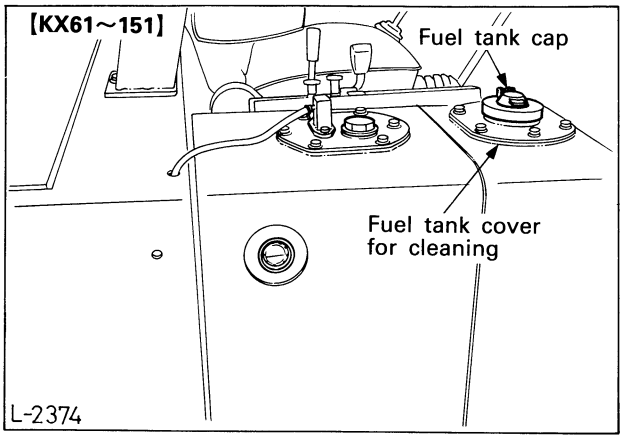

Engine key stop device
Easy air bleeding

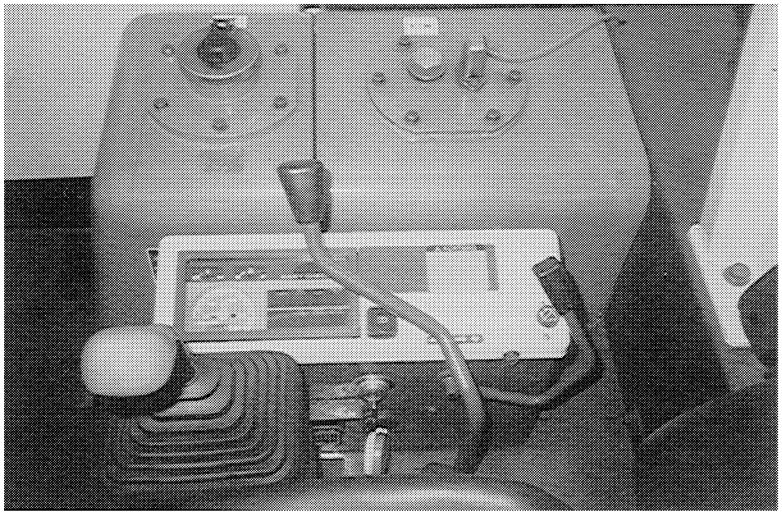

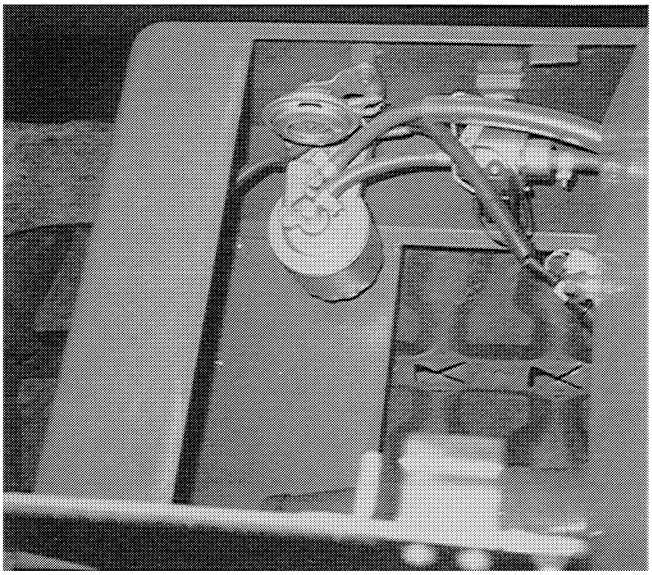

[Ⅱ] Machine Body & Structure

[1] Main components

Model: KX101

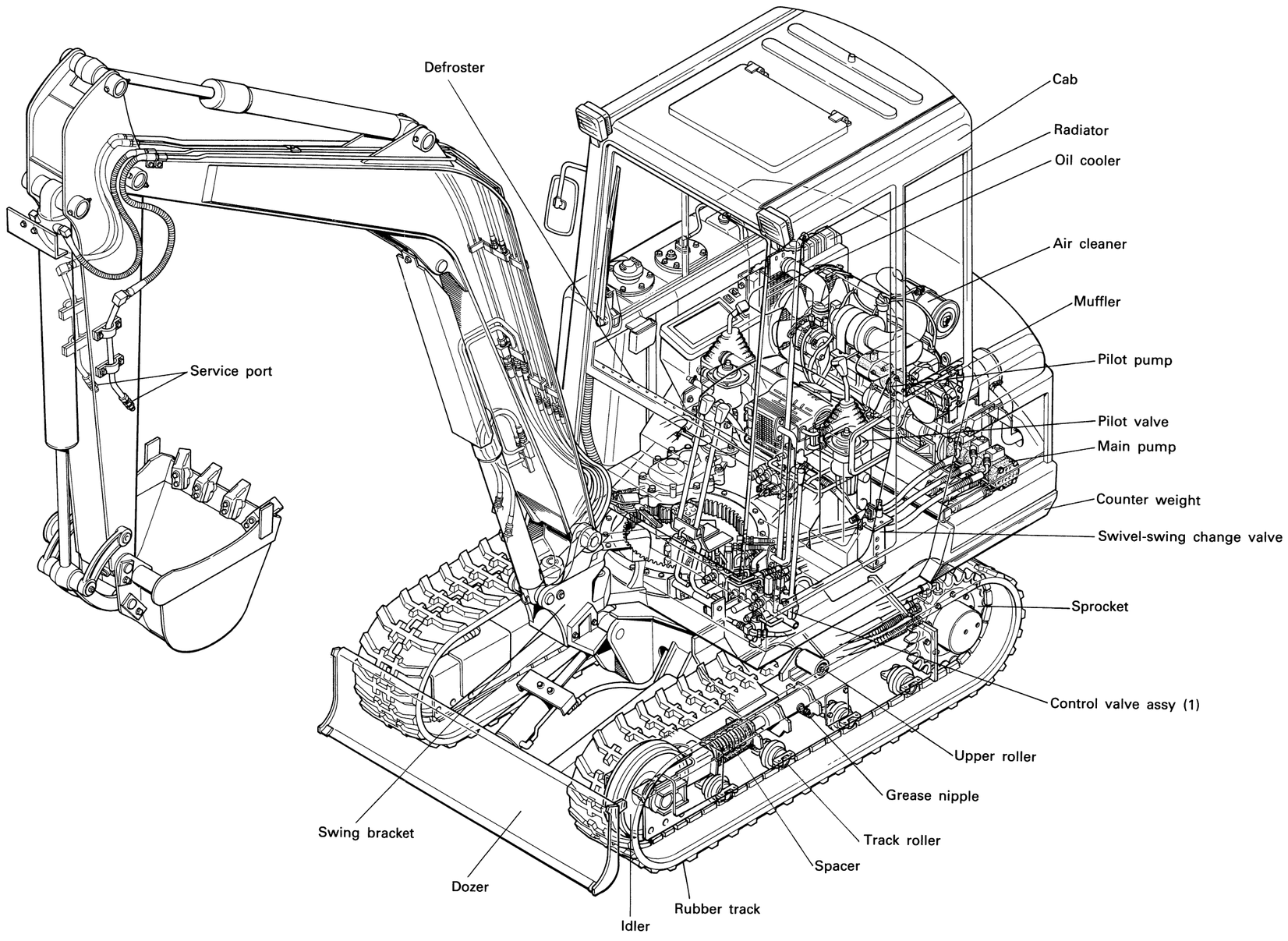

[2] Upper frame components

(1) Main components layout

KX36, 41

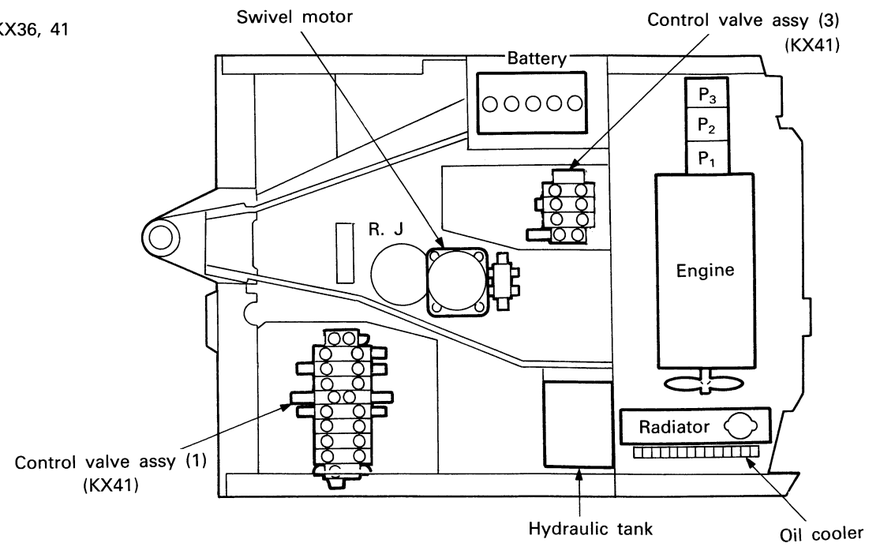

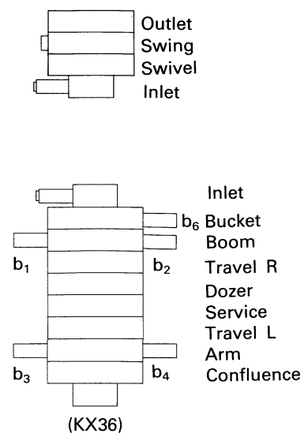

KX61

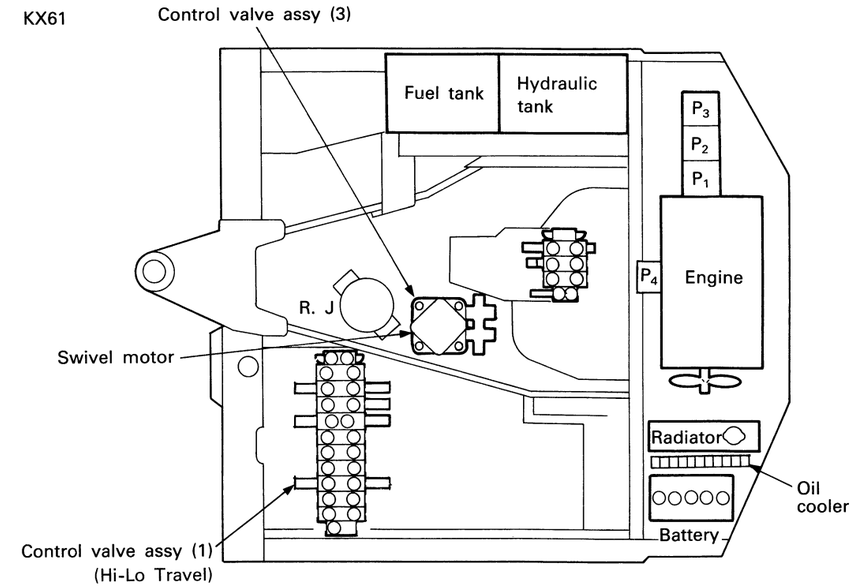

KX71

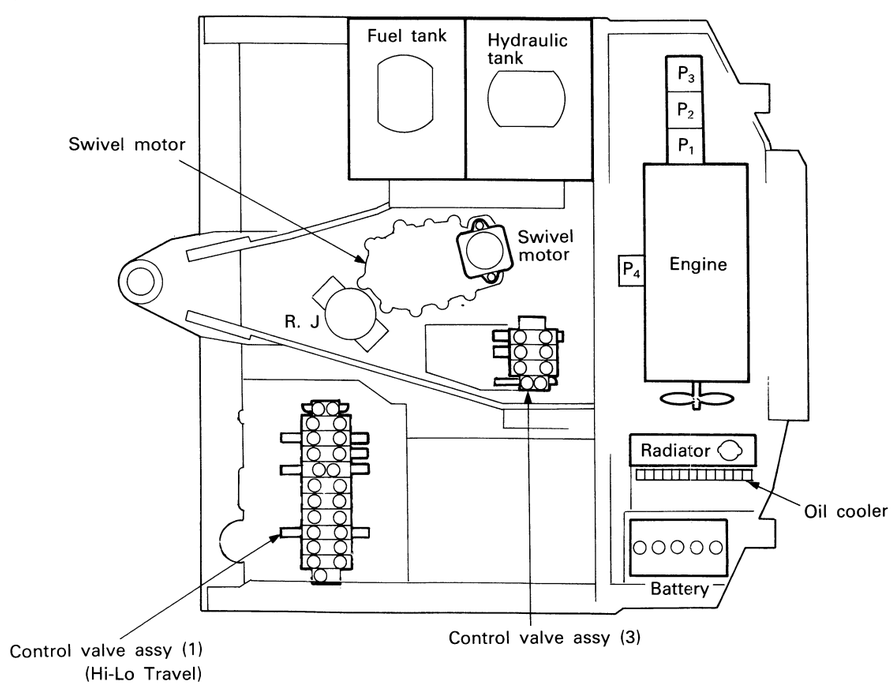

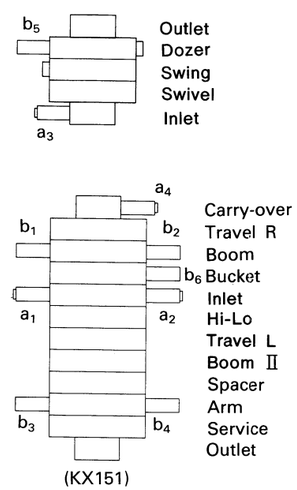

KX101, 151

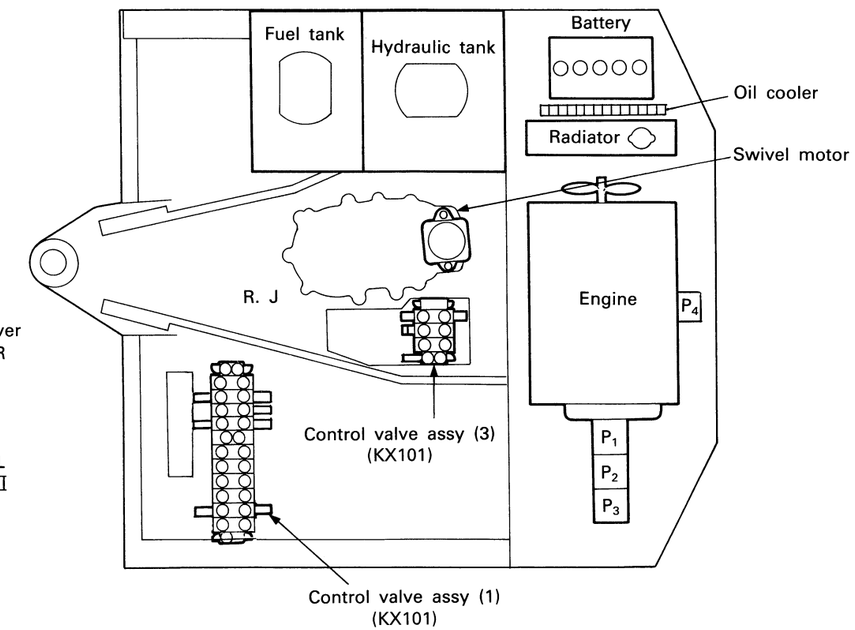

(2) Front hoses

Front view has been cleared by passing the front hose through the swing bracket.

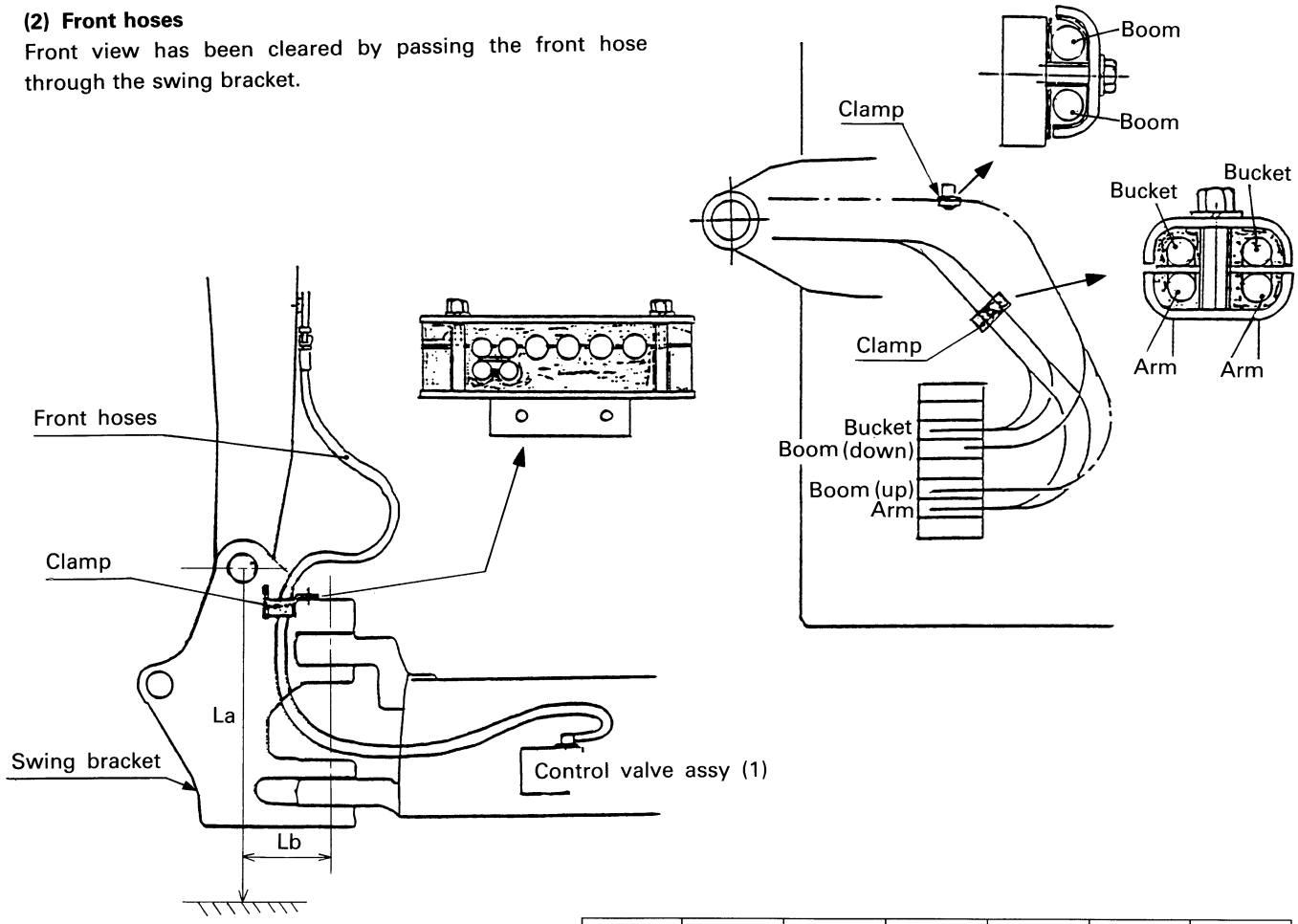

(3) Upper frame

Machine type is punched at ① ② ③ locations.

Model	KX36	KX41	KX61	KX71	KX101	KX151
La						
Lb	117	←	160	←	←	200
Ls	520	←	540	←	←	580
Lo	75	←	80	←	←	50

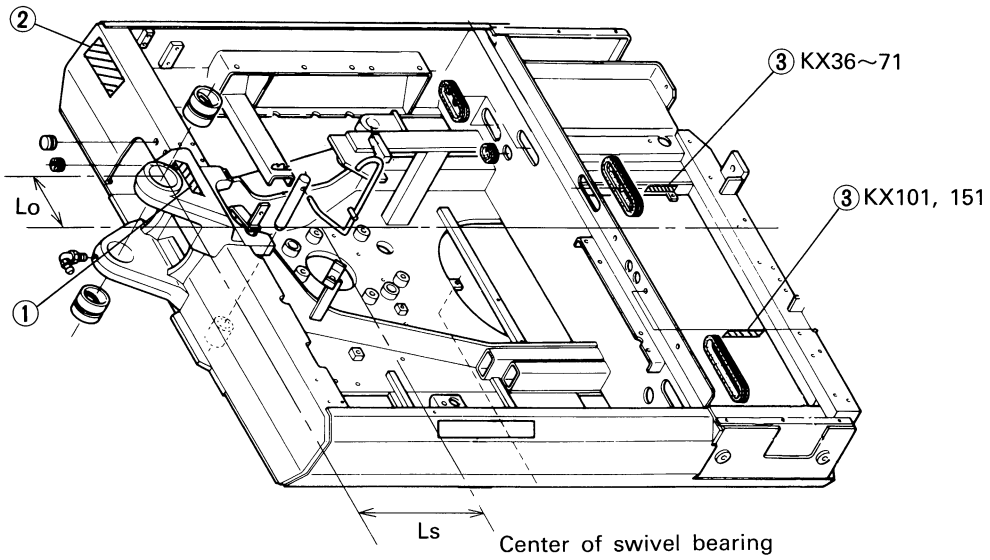

(4) Lever control system

1. Mechanical operating lever

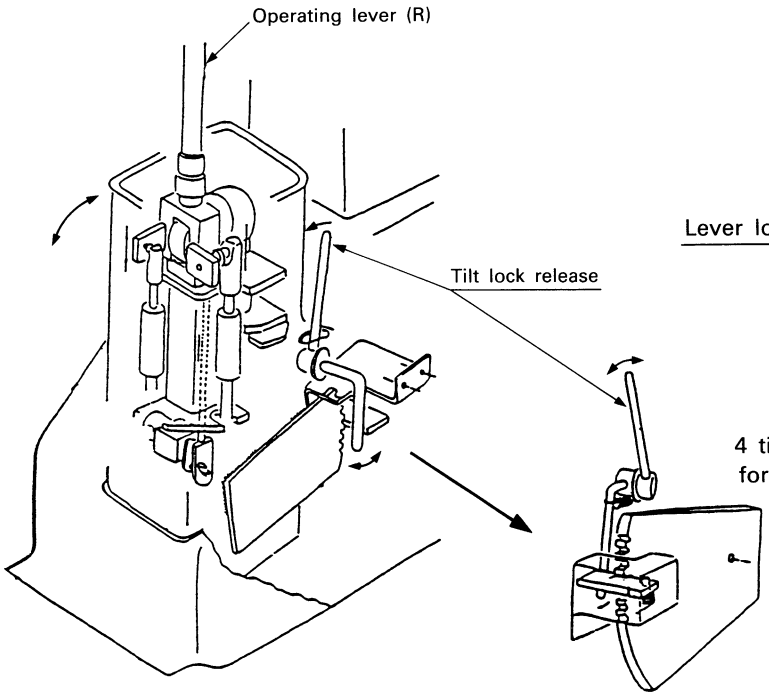

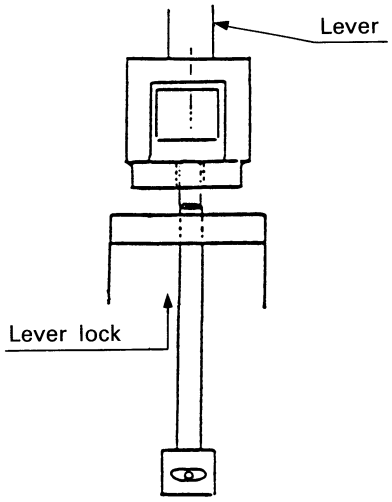

4 tilting stages
for 4 degree

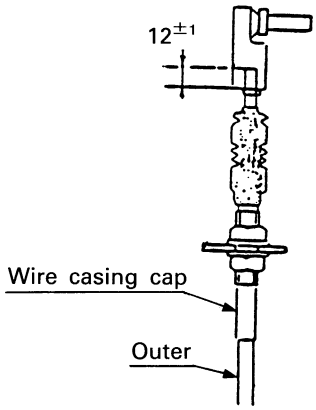

2. Safety lock lever

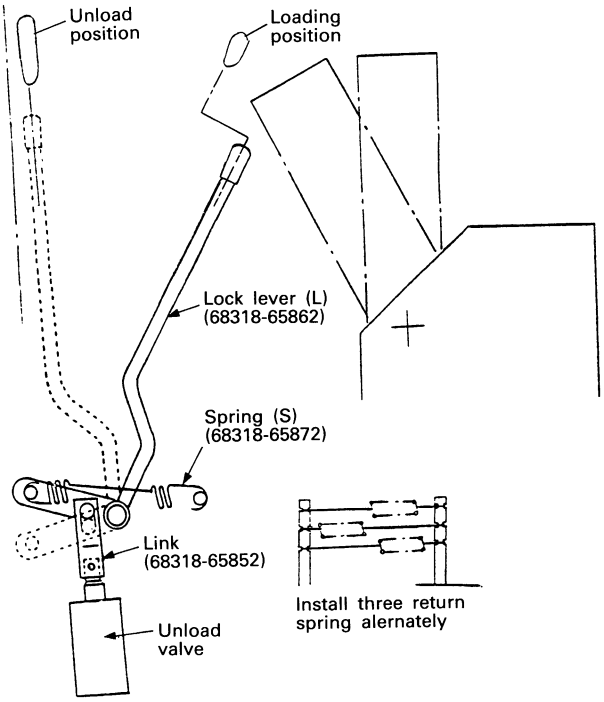

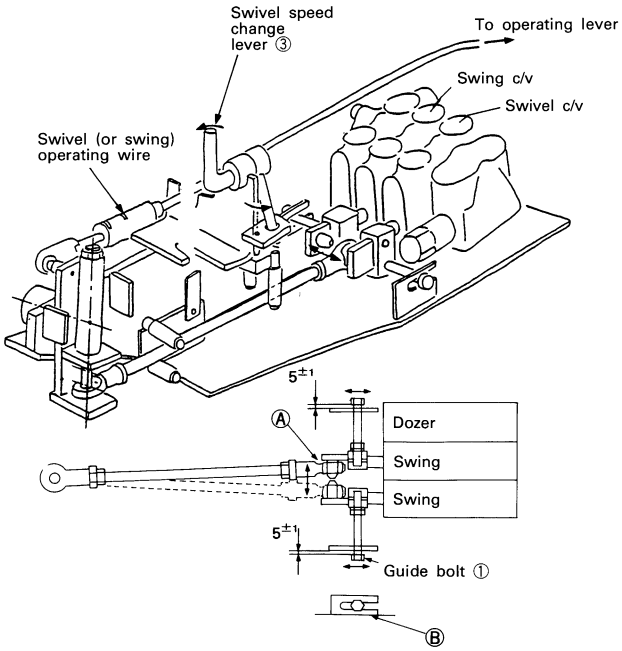

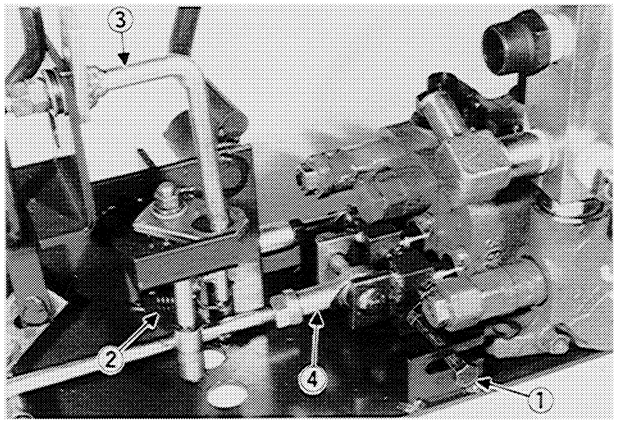

(5) Hi-Lo swivel speed change mechanism
KTC, KCL, KTA : KX41, 71

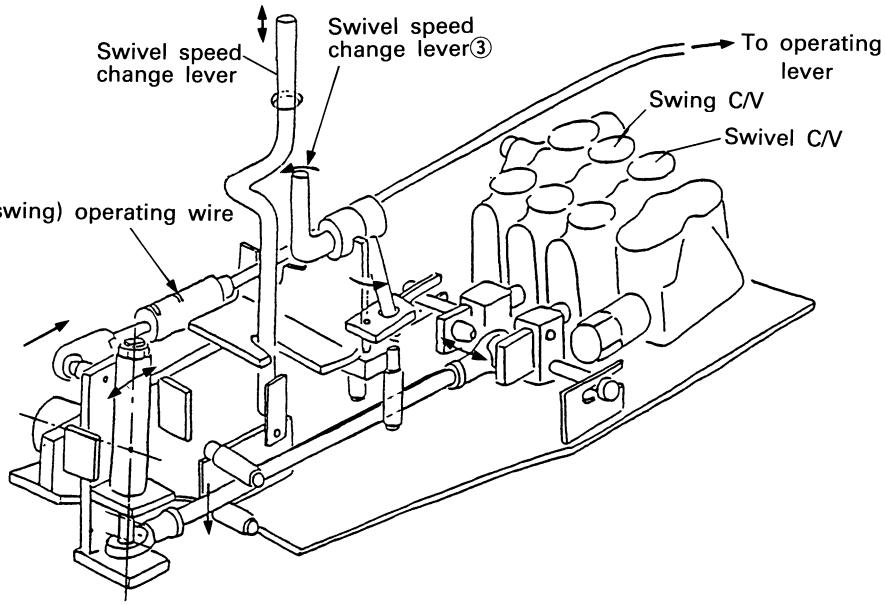

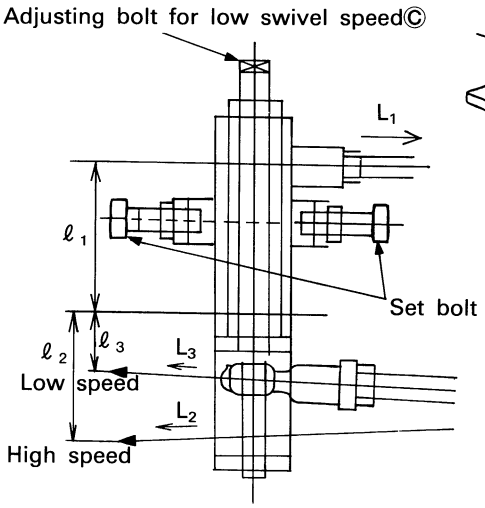

$$L_2 = L_1 \times \frac{\ell_2}{\ell_1}$$

$$L_3 = L_1 \times \frac{\ell_3}{\ell_1}$$

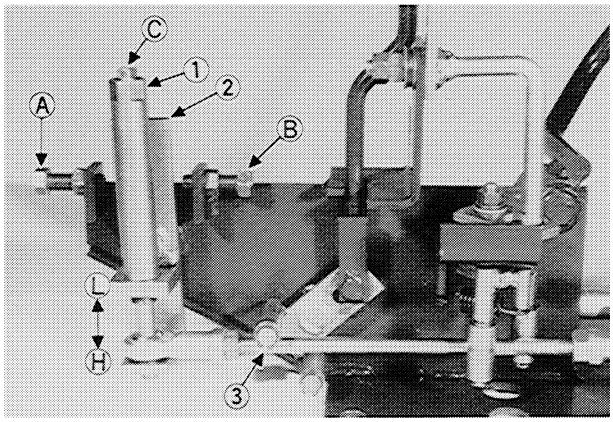

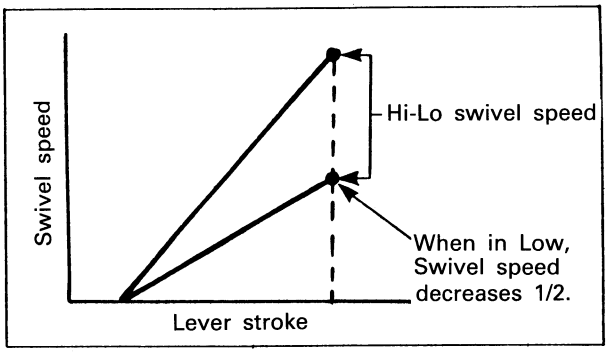

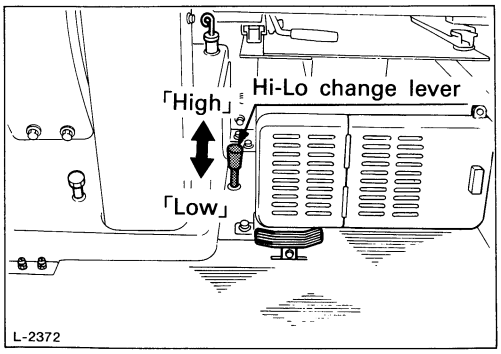

(rpm)

Machine model		KX36	KX41	KX61	KX71
Swivel speed (R&L) (rpm)	Hi	9.8±1.0	8.3±0.8	9.0±0.9	8.7±0.9
	Low	5.7±0.5	5.5±0.5	5.5±0.5	5.5±0.5
Swing speed (Hi-range) (sec)	R	3.4~4.0	3.5~4.1	6.0~6.3	5.7~6.3
	L	4.2~4.8	4.7~5.3	7.7~8.3	7.2~7.8

- Swivel speed difference should be less than 10%.
- Swing speed for low range isn't defined.

(6) Fuel system

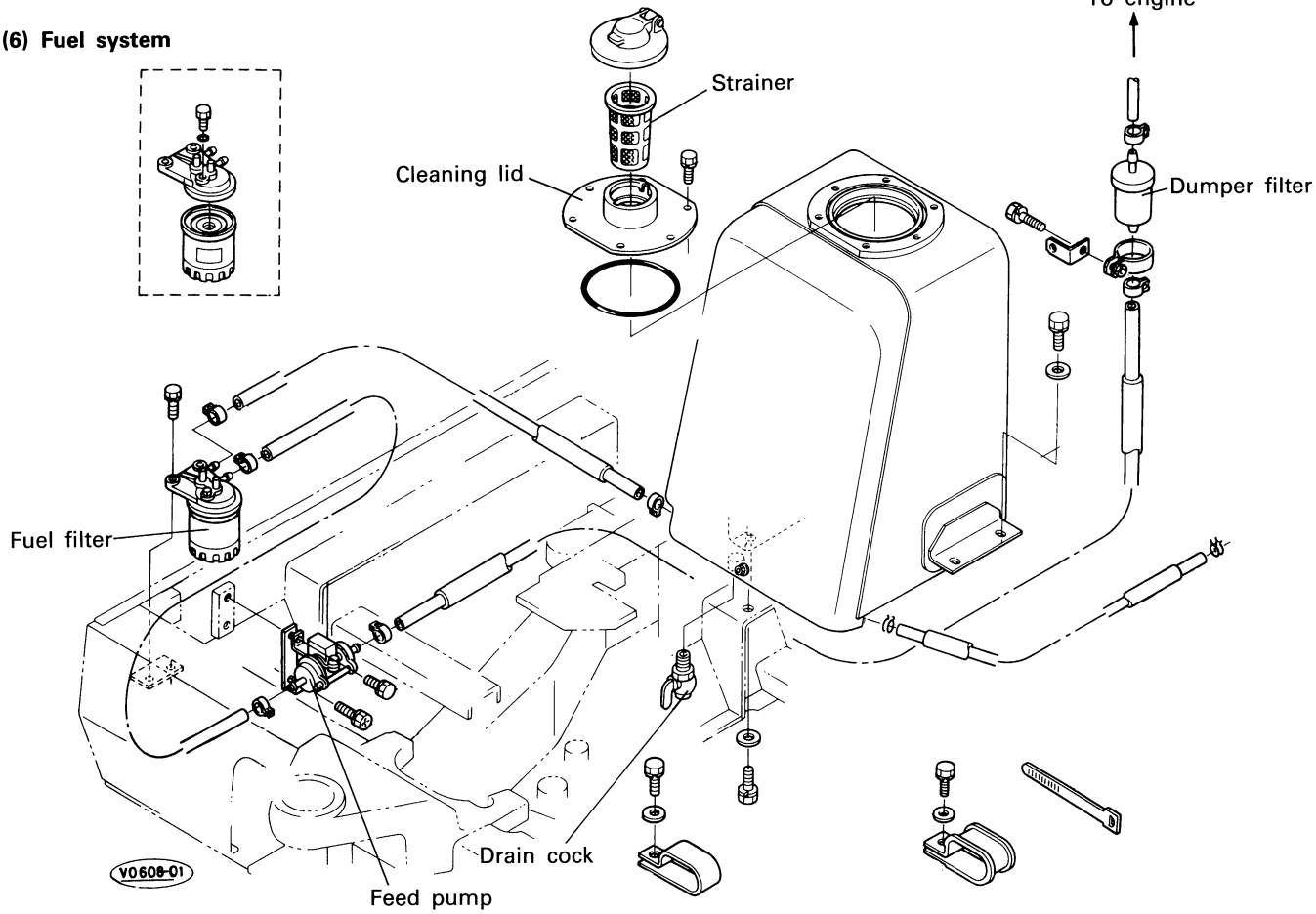

(7) Bonnet

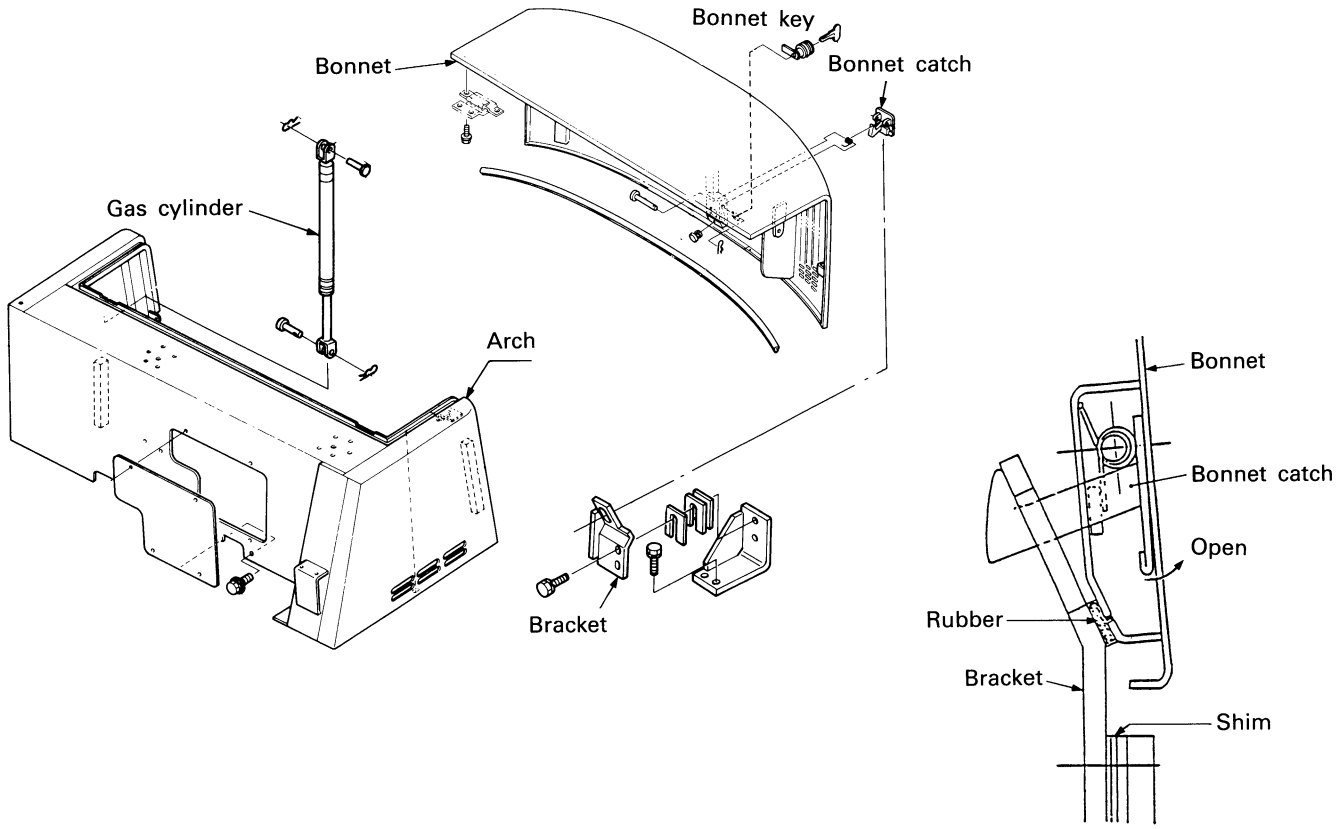

[3] Lower frame components

(1) Lower frame (KX101 Rubber track)

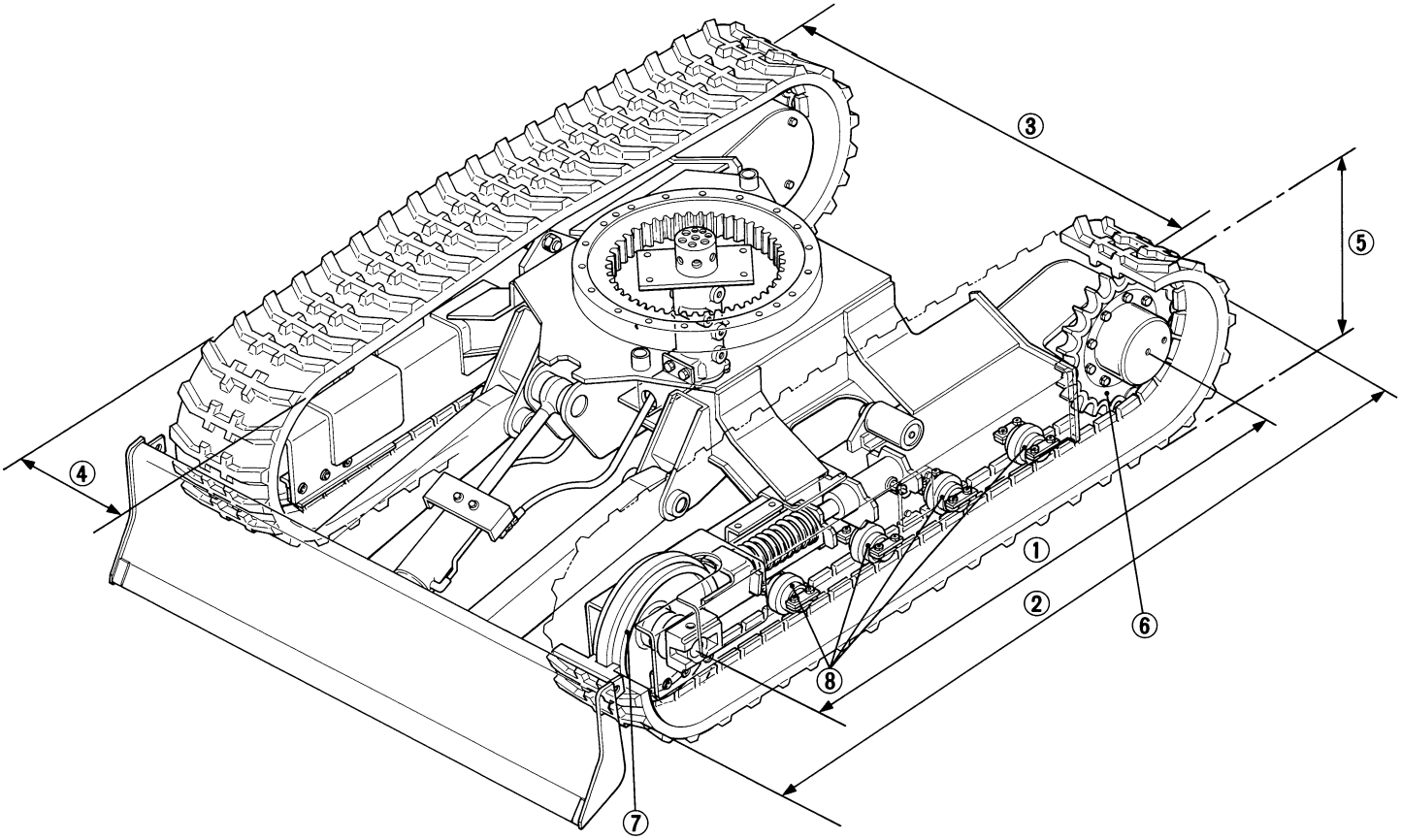

Machine model		KX36	KX41	KX61	KX71	KX101	KX151
① Tumbler center distance		1010	←	1300	←	1600	1860
② Track shoe length	Iron	1370	←	1765	1766	2072	2425
	Rubber						
③ Track shoe center distance		730	←	1150	←	1160	1440
④ STO track shoe width × link No.		200×32	230×32	250×37	300×37	350×43	400×38
⑤ Track shoe height	Iron	365	360	480	510	520	611
	Rubber						
⑥ Sprocket PCD × teeth No.		277.2×19 68198-14431	←	376.6×23 68318-14431	←	376.6×23 68658-14431	458.0×21 68678-14431
⑦ Idler tread surface dia.		200 68198-21301	←	305 68318-21301	←	305 68658-21301	360 68678-21301
⑧ Track roller, code No. × pcs		68198-21701×6	←	68318-21701×6	←	68658-21701×8	68678-21701×8
⑨ Approach angle [deg]	Iron shoe	24	24	22	19	23	26
	Rubber shoe	20	20	21	19	22	25

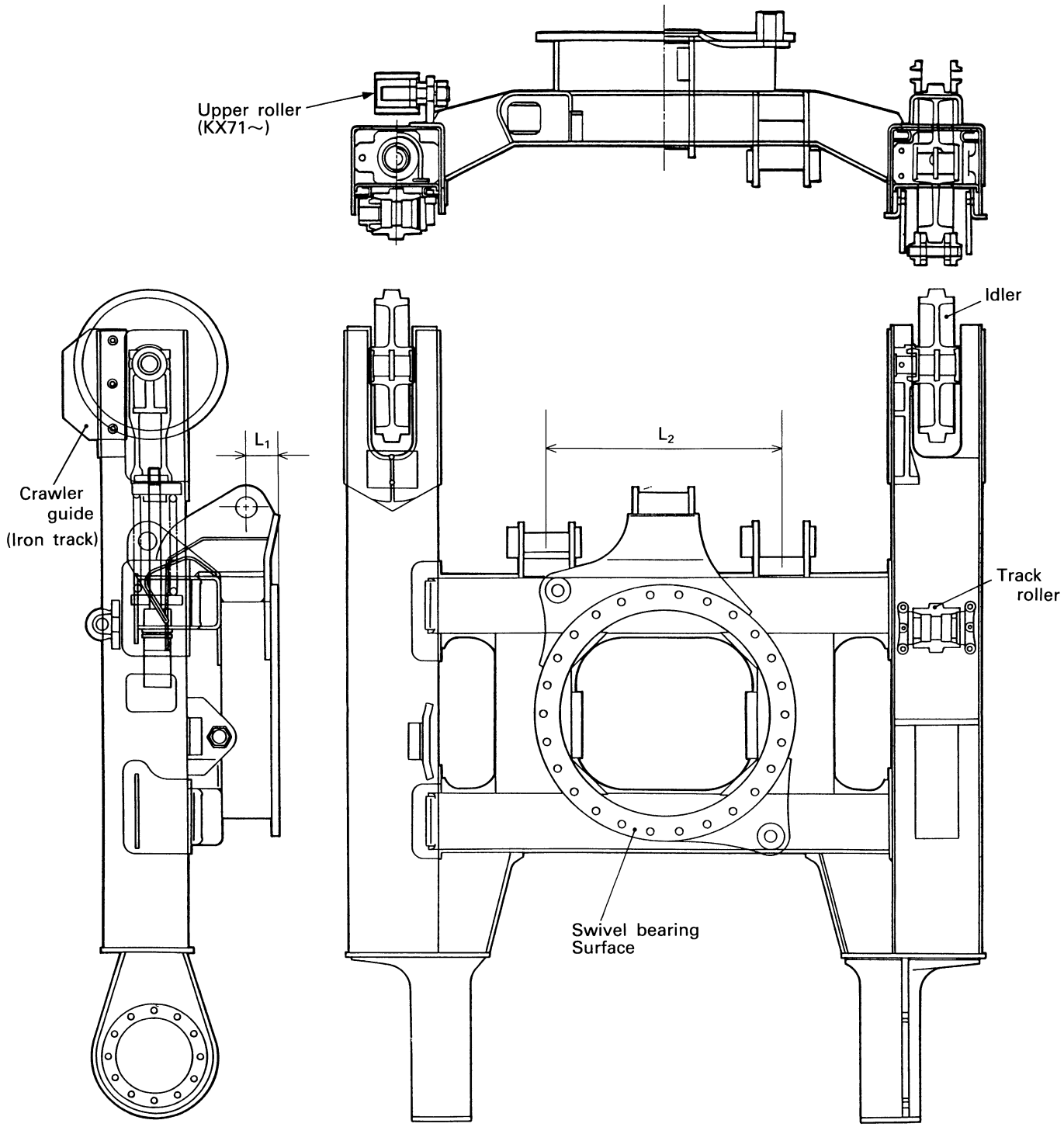

	KX36	KX41	KX61	KX71	KX101	KX151
L_1	89.5	←	64	←	65	80
L_2	330	←	490	←	490	620

(2) Undercarriage

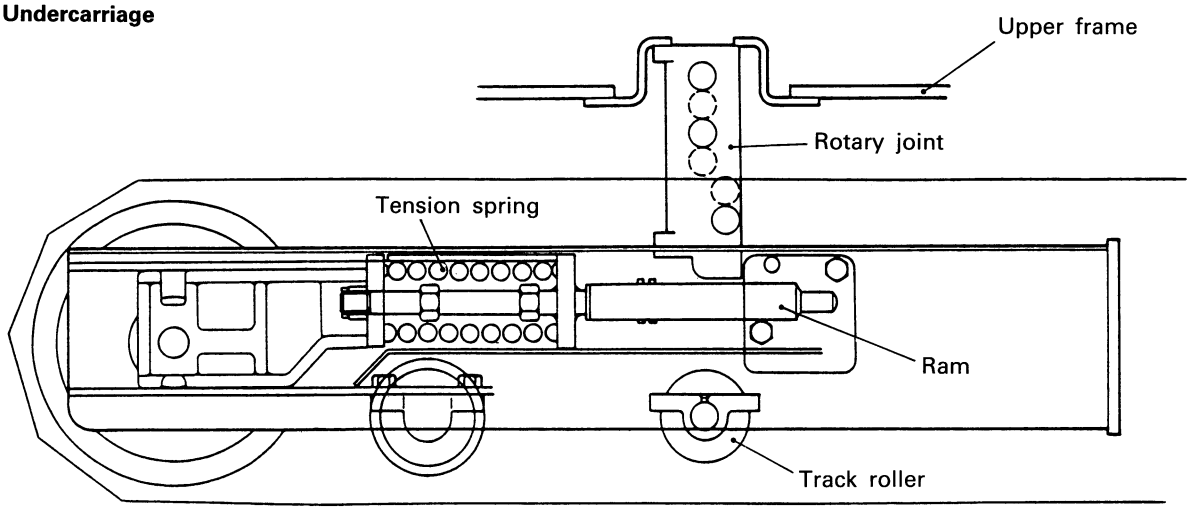

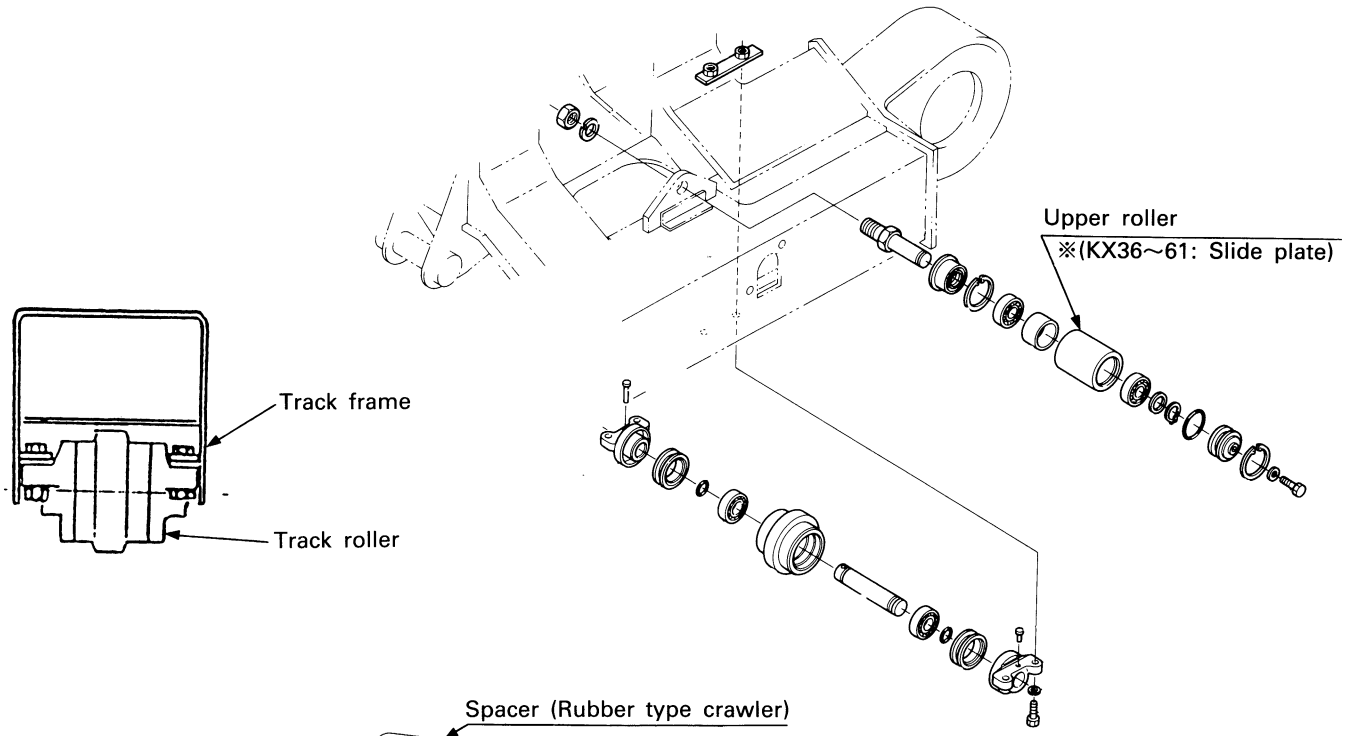

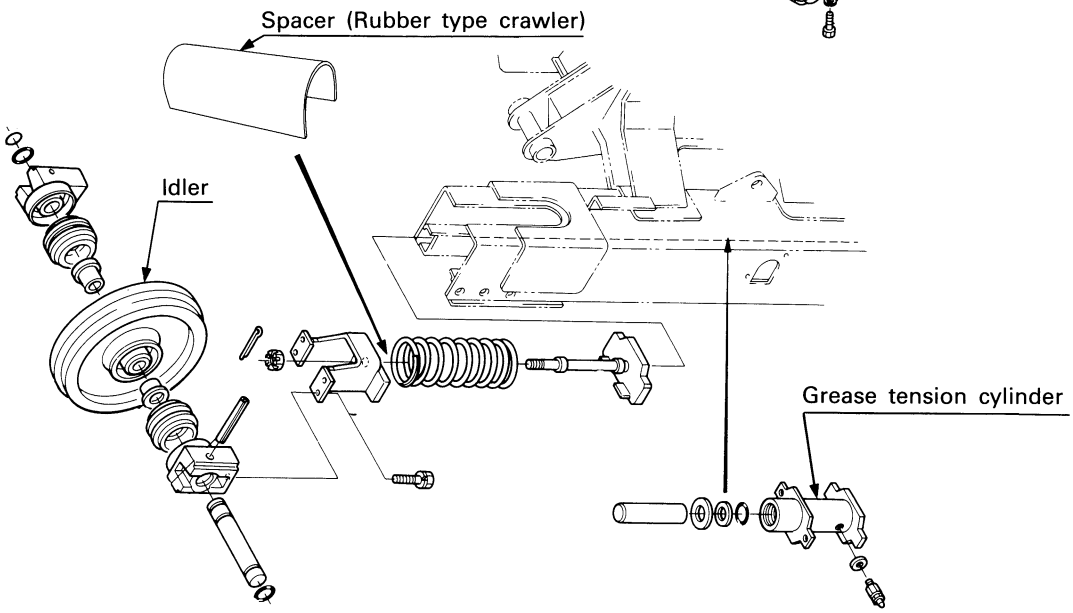

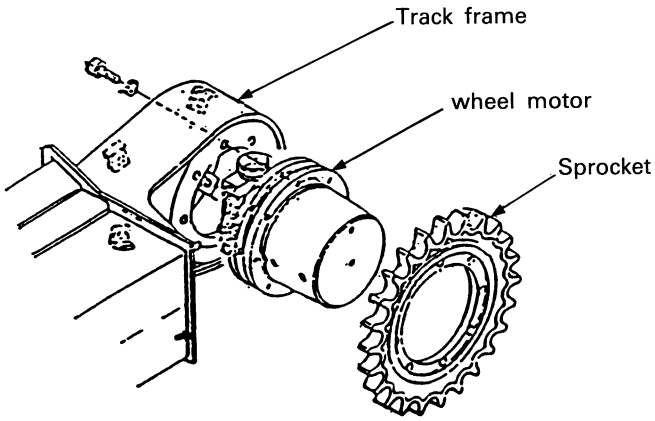

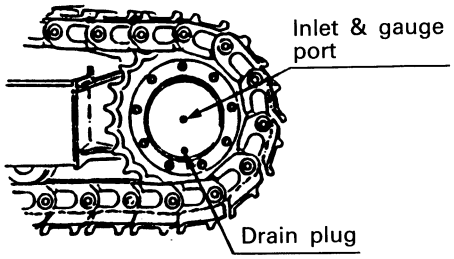

(3) Crawler shoe

1. Crawler tension sag distance

KX36, 41 Iron crawler All model of rubber crawler	KX61 Iron crawler	KX71 101 151 Iron crawler
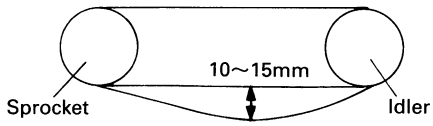	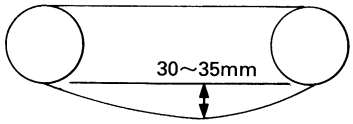	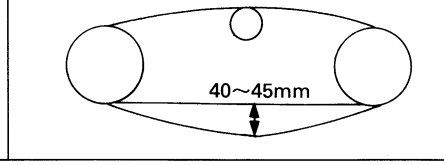

2. Interchangeable of iron and rubber crawlers

	IRON CRAWLER ⟷	RUBBER CRAWLER
Main structure difference	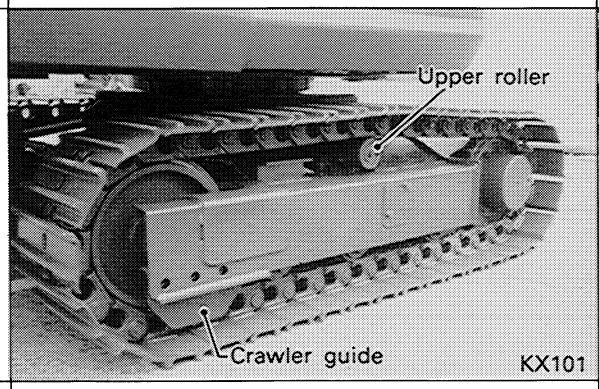	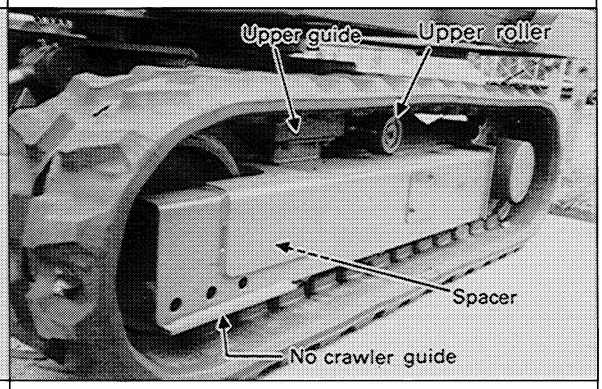

Upper guide difference			
	KX 36 41	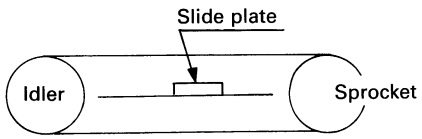	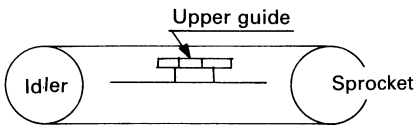
	KX 61	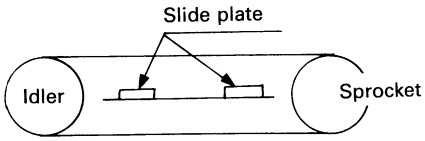	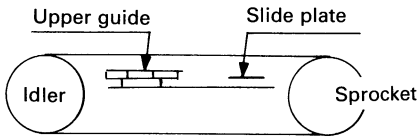
	KX 71 101 151	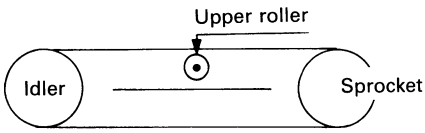	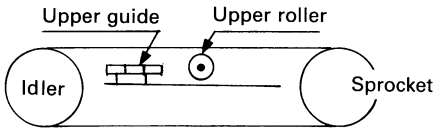

(4) U type spacer

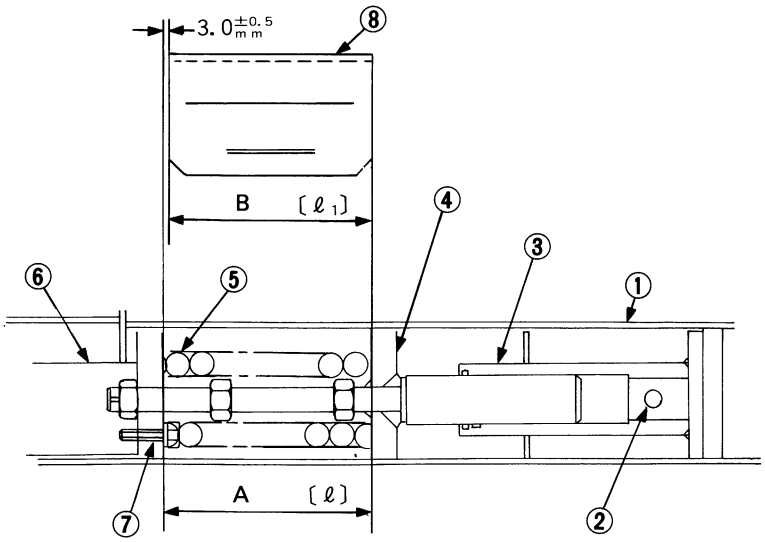

〈Tension device layout〉

① Track frame
② Cylinder nipple
③ Grease cylinder
④ Spring retainer
⑤ Spring
⑥ Yoke
⑦ Bolt : 7.9~9.2 kgf·m (Lock tite)
⑧ Spacer (for rubber crawler)
Reinforced type: 9 mm thickness
⑨ Yoke
⑩ Spacer

$\ell - \ell_1 = 3.0^{\pm 0.5}$mm
$0.039^{\pm 0.02}$in

[mm]

Model	Dimension A	B
KX36, 41	147.5±1	144.5
KX61, 71	178.5±1	175
KX101	250.0±1	246
KX151	272.0±1	269

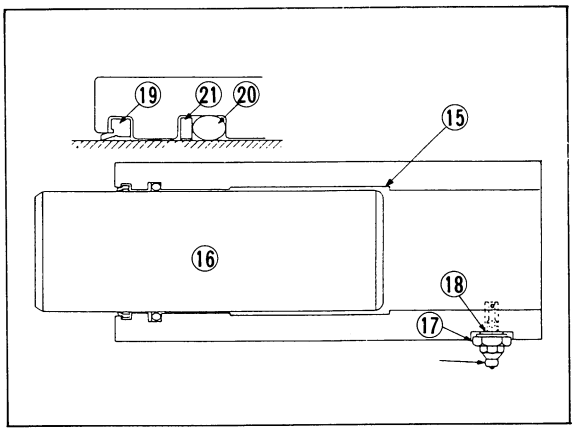

⑮ Cylinder tube
⑯ Ram
⑰ Cylinder nipple
⑱ Packing (Copper)
⑲ Rod seal
⑳ O ring
㉑ Back-up ring

Model	O·D	Length
KX36, 41	1.18 in (30mm)	5.71 in (145 mm)
KX61, 71	1.57 in (40mm)	6.10 in (155 mm)
KX101	2.36 in (60mm)	6.85 in (174 mm)
KX151	2.76 in (70mm)	6.69 in (170 mm)

● Cylinder nipple tightening torque : 5.0~5.5 kgf·m

(5) Round type spacer (Limited serial No. only)

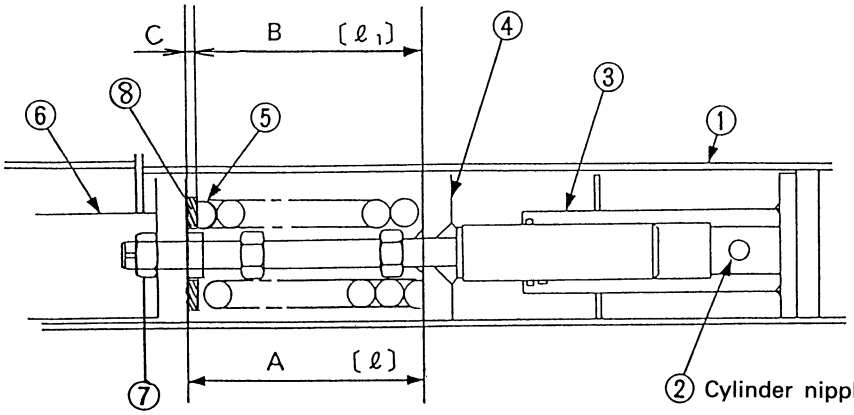

〈Tension device layout〉

① Track frame
② Cylinder nipple
③ Grease cylinder
④ Spring retainer
⑤ Spring
⑥ Yoke
⑦ Bolt : 7.9~9.2 kgf·m (Lock tite)
⑧ Spacer (for rubber crawler)

② Cylinder nipple tightening torque: 5.0~5.5 kgf·m

Dimension "A"

Model	A mm
KX36, 41	147.5
KX61, 71	178.5
KX101	250.0
KX151	272.0

Round type spacer (mm)

Model	Code No.	C	D	E
KX36, 41	68721-94140	12.5	21	65
KX61, 71	90531-41130	11.0	22	80
KX101	68751-94210	16.5	26	80
KX151	68671-21470	26.0	65	110

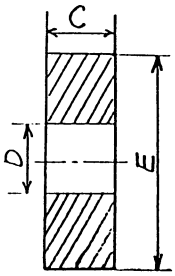

Spring (mm, kgf)

Spec.	KX36, 41	KX61	KX71	KX101	KX151	KH-191
Code No.	68051-21420	68171-21422	68171-21422	68221-21542	68773-21420	68271-21420
Spring dia.	15	19	19	20	25	26
Coil mean dia.	53	60	60	60	90	100
Total coil no.	9	9	9	12	10	10
Effective coil no.	7	7	7	10	8	8
Free height	159.5	198.5	198.5	280	312.5	353.9
Setting height B	135.0	167.5	162	233.5	246	297
Spring coefficient	48.6	86.2	86.2	56.8	67.0	57.1
Setting load	1190.7	2672	3146	2641	4456	3250
Full press height	127.5	161.5	161.5	230	237.5	247
Coil outer dia.	68	79	79		115	126

KH-191; Iron track, Others; Rubber track, Spring material: sup 9

(6) Track shoe Interchangeability

Shoe link. Crawler looseness.

Values in column Ⓐ are for new machines.
Values in column Ⓑ are allowable limits.

Item / Model		Unit	KH-36	KH-41	KH-51	KH-66	KH-101	KH-151
A 4 link length	Ⓐ / Ⓑ	mm	360 / 370	←	406.4 / 416.5	←	←	540 / 554
B Shoe link stepping surface height	Ⓐ / Ⓑ	mm	46 / 41	←	65 / 55	←	63 / 58	75 / 70
C Bush O.D.	Ⓐ / Ⓑ	mm	22 / 20.5	←	28 / 26.5	←	32.2 / 30.7	41.2 / 39.7
D Bush I.D.	Ⓐ / Ⓑ	mm	14 / 16	←	17 / 19	←	19 / 21	24.3 / 25.8
E Master pin O.D.	Ⓐ / Ⓑ	mm	14 / 12.5	←	17 / 15.5	←	19 / 17.5	23.8 / 22.3
F Grouser height	Ⓐ / Ⓑ	mm	16 / 8	←	16.5 / 8	←	←	18 / 9
G Master pin length	Ⓐ / Ⓑ	mm	76	←	93.5	←	101	140
H Shoe width × Link No. × pitch			200×31 ×90	230×31 ×90	250×37 ×101.6	300×37 ×101.6	350×43 ×101.6	400×38 ×135

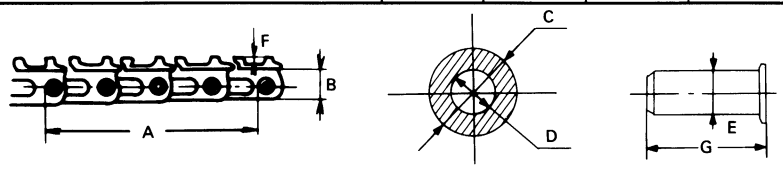

Item / Model		Unit	KX36	KX41	KX61	KX71	KX101	KX151
A 4 link length	Ⓐ / Ⓑ	mm	360 / 370	←	406.4 / 416.5	←	←	540 / 550
B Shoe link stepping surface height	Ⓐ / Ⓑ	mm	56 / 51	←	68 / 63	←	70.5 / 65.5	75 / 70
C Bush O.D.	Ⓐ / Ⓑ	mm	22 / 20.5	←	28 / 26.5	←	32.2 / 30.7	41.2 / 39.7
D Bush I.D.	Ⓐ / Ⓑ	mm	14 / 16	←	17 / 19	←	19 / 21	24.3 / 25.8
E Master pin O.D.	Ⓐ / Ⓑ	mm	14 / 12.5	←	17 / 15.5	←	19 / 17.5	23.8 / 22.3
F Grouser height	Ⓐ / Ⓑ	mm	9 / 4.5	←	16.5 / 8	←	←	18 / 9
G Master pin length	Ⓐ / Ⓑ	mm	76	←	93.5	←	101	140
H Shoe width × Link No. × pitch			200×32 ×90	230×32 ×90	250×37 ×101.6	300×37 ×101.6	350×43 ×101.6	550×38 ×135

X Link recess	KH	12	12	16	16		26 (R) 24.9 (Weld) 19.9 (Bolt)
	KX	22	22	24	24	23.9	19.9 (Bolt)
Y Idler height 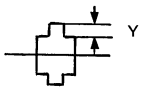	KH (Iron)	→	218−199 =19 (9.5)				
	KH (Rubber)			339−305 =34 (17)			408−360 =48 (24)
	KX (I&R)	→	242−200 =42 (21)	349−305 =44 (22)	349−305 =44 (22)	349−305 =44 (22)	407−360 =47 (23.5) : W 392−360 =32 (16) : B

(7) Specification of rubber crawler

Machine model	Weight (kg)	Width×Link No. ×Pitch (mm)	Link height (mm)	Rug height (mm)	No, of steel wire	Center circum ference length (mm)	Endless lap length (mm)
KH-007 BS	23	180×36×72 C / N: 68701-22210	28	18	400kg / 28pcs		
KH-36 KX36 BS	35	200×42×96 KH-36, C / N: 90421-11100 KX36, C / N: 68151-22311	22	20	400kg / 40±4pcs	2880±10	
KH-41 KX41 BS	44	230×42×96 KH-41, C / N: 68721-94110 KX41,C / N: 68191-22311	23	25	400kg / 40±4pcs	↑	
KH-51 KX61 Fukuyama	89	250×35×109.15 C / N: 90531-41155	23	25	536kg / 56pcs	$3820.25\ ^{+3}_{-6}$	370
KH-61 Fukuyama	117	300×35×109.15 C / N: 90731-51153	23	25	536kg / 66pcs	↑	400±10
KH-66 KX71 Fukuyama	117	300×35×109.15 C / N: 90731-51153	23	25	536kg / 66pcs	↑	↑
KH-71 Fukuyama	123	300×37×109.15 S / N: 90541-41150	23	25	536kg / 66pcs	↑	↑
KH-030 Fukuyama	120	300×39×109.15 S / N: 90551-41150	23	25	536kg / 66pcs		
KH-101 KX101 BS	147	300×41×109 S / N: 90561-41152	23	25	400kg / 66pcs 800kgf×44pcs =35.2ton	$4469\ ^{+3}_{-0}$	350
KH-040 KH-151 KX151 Fukuyama	235	400×37×142 S / N: 90791-61150	26	25	536kg / 96pcs	$5254\ ^{+3}_{-6}$	600±10

Rubber material: NR (Natural Rubber)×SBR
Rubber streight: 140kgf / cm^2～180kgf / cm^2
Core iron material: FGD45QT

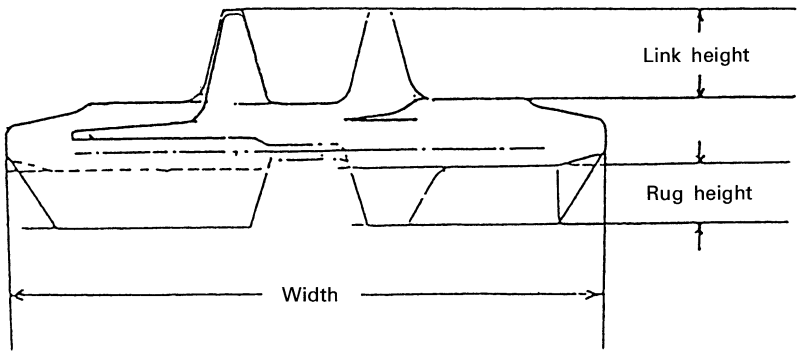

[Ⅲ] Hydraulic System

[1] Components & circuit diagram

(1) Outline of Hydraulic System

1. In a new series of hydraulic systems, the control valve of the main line is controlled by a hydraulic pilot, (KX61～151) or wire operating method (KX36, 41).
2. Three pumps -- No. 1, 2 & 3 pumps -- are directly coupled to an engine as hydraulic pumps of the main line, and the No. 4 pump has been equipped for the hydraulic pilot system and is fitted to the fuel injection pump shaft.
3. Switching between the swivel and the swing is done by a sliding spool switching valve ⑤ which changes over the flow of oil coming from the pilot valve ②.
5. The major feature of this new series of hydraulic systems is the adoption of a power-up hydraulic line system. In this new line system, the digging force has been set 10-15% higher than the conventional digging force when working with the boom, arm, bucket or travelling.
   As the pressure of the No. 3 pump line reaches the set pressure (approx. 60～65kgf/cm^2) with use of (swivel, swing and dozing) actuators provided in this pump line, a spool of the power-up valve is moved by that pilot line pressure and is relieved by the main pressure on the low-pressure side to prevent an engine stop from occurring.
   pressure and is relieved by the main pressure on the low-pressure side to prevent an engine stop from occurring.
6. For the swivel motor, an orbital motor is adopted in models KX36 and KX41; a piston motor, in models KX61～151. For the travel motor, a wheel motor has been adopted in all models.
   Models KX61～151 are of travel duplex specification which is possible by controlling the angle of swash plate found inside the wheel motor by means of a high-low changeover valve.
7. For controlling of the swivel system, a counterbalanced spool valve is abolished, and a relief valve is built in instead to make a fine control easier to accomplish.
8. An oil cooler is adopted in all models by standard specification for oil temperature control of the hydraulic system line.

(2) Hydraulic main components

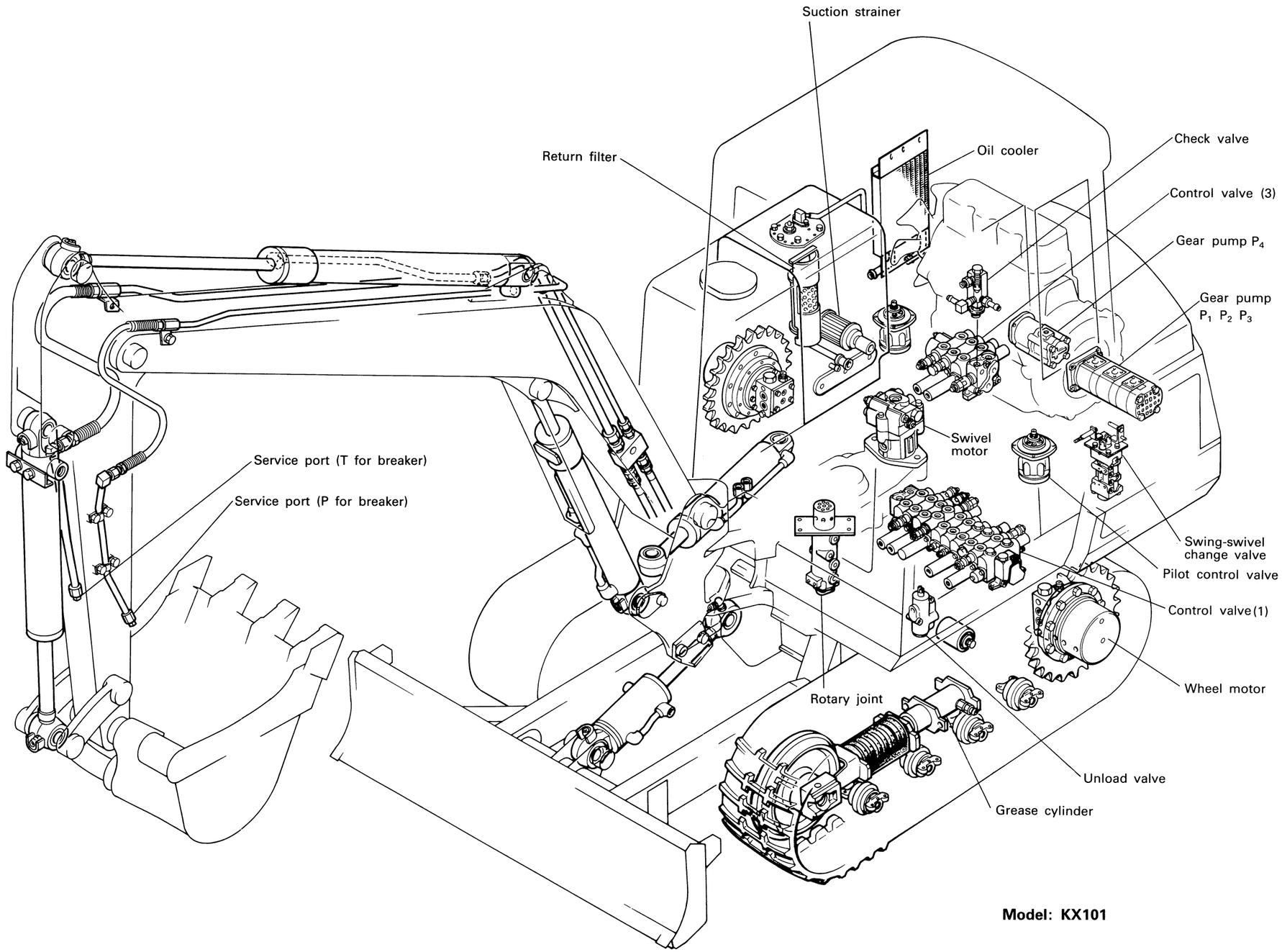

Model: KX101

(3) Hydraulic oil flow

1. Total piping & hose connection

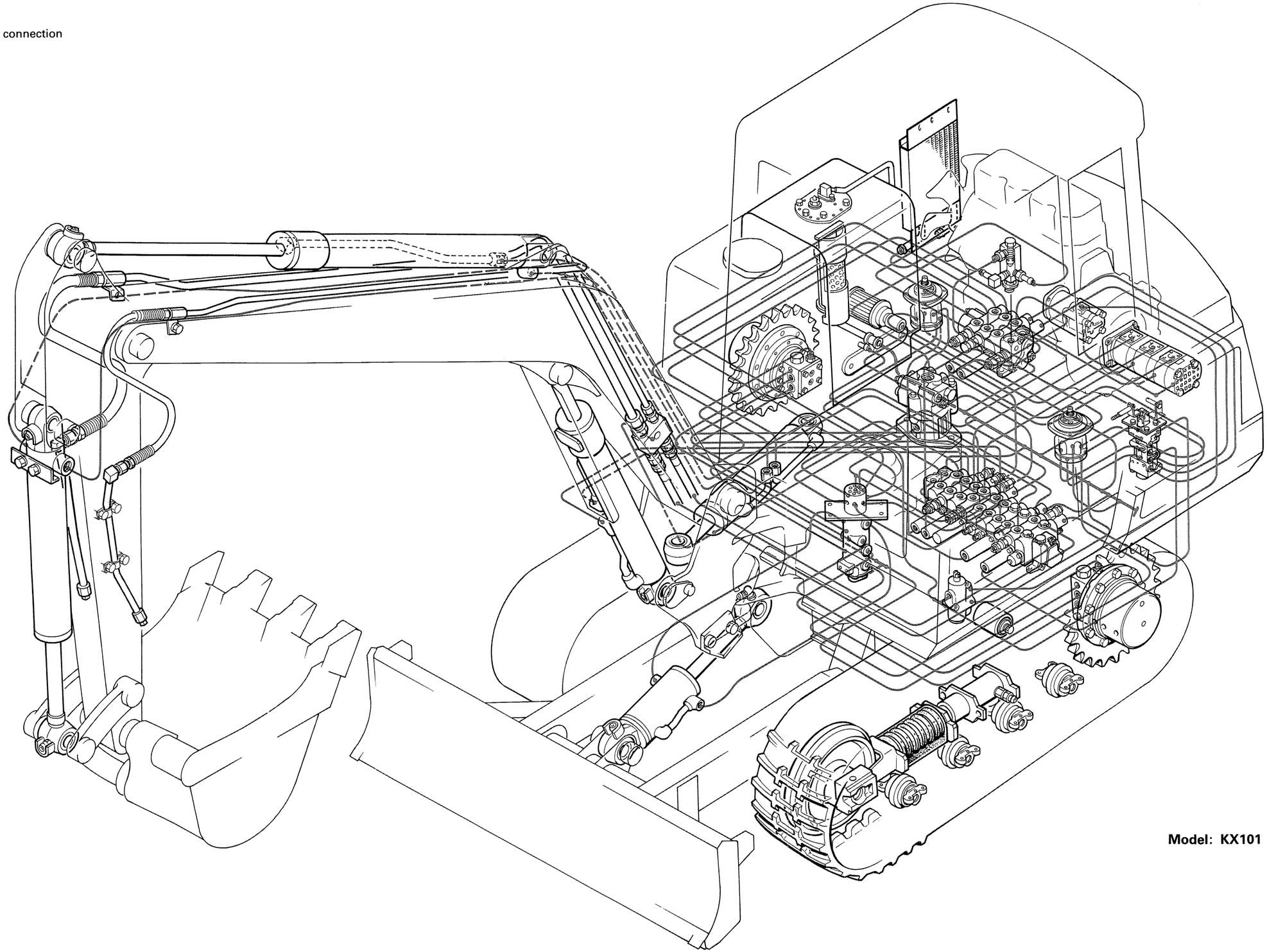

Model: KX101

2. Pump pressure line & return line

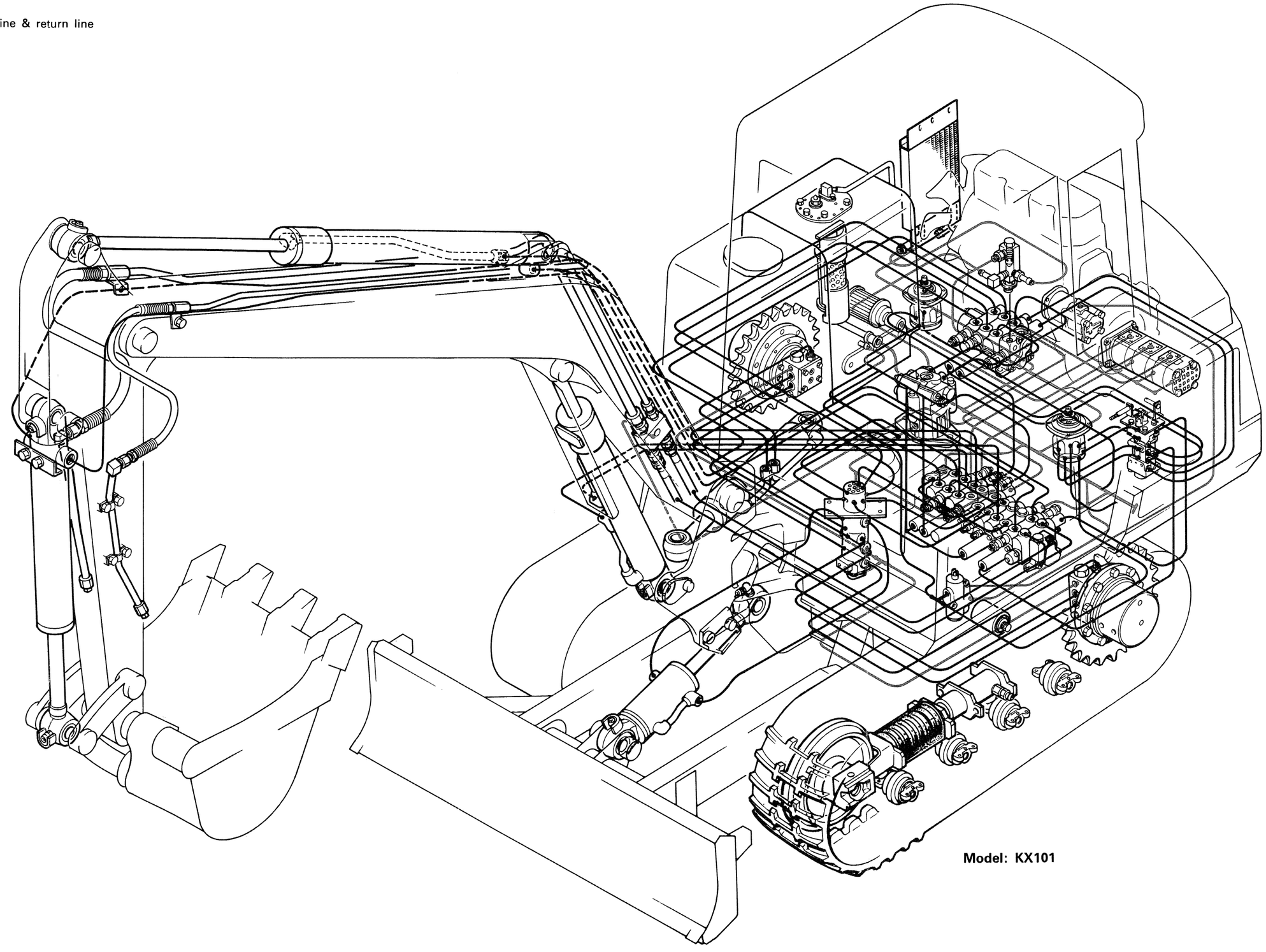

3. Pilot control line

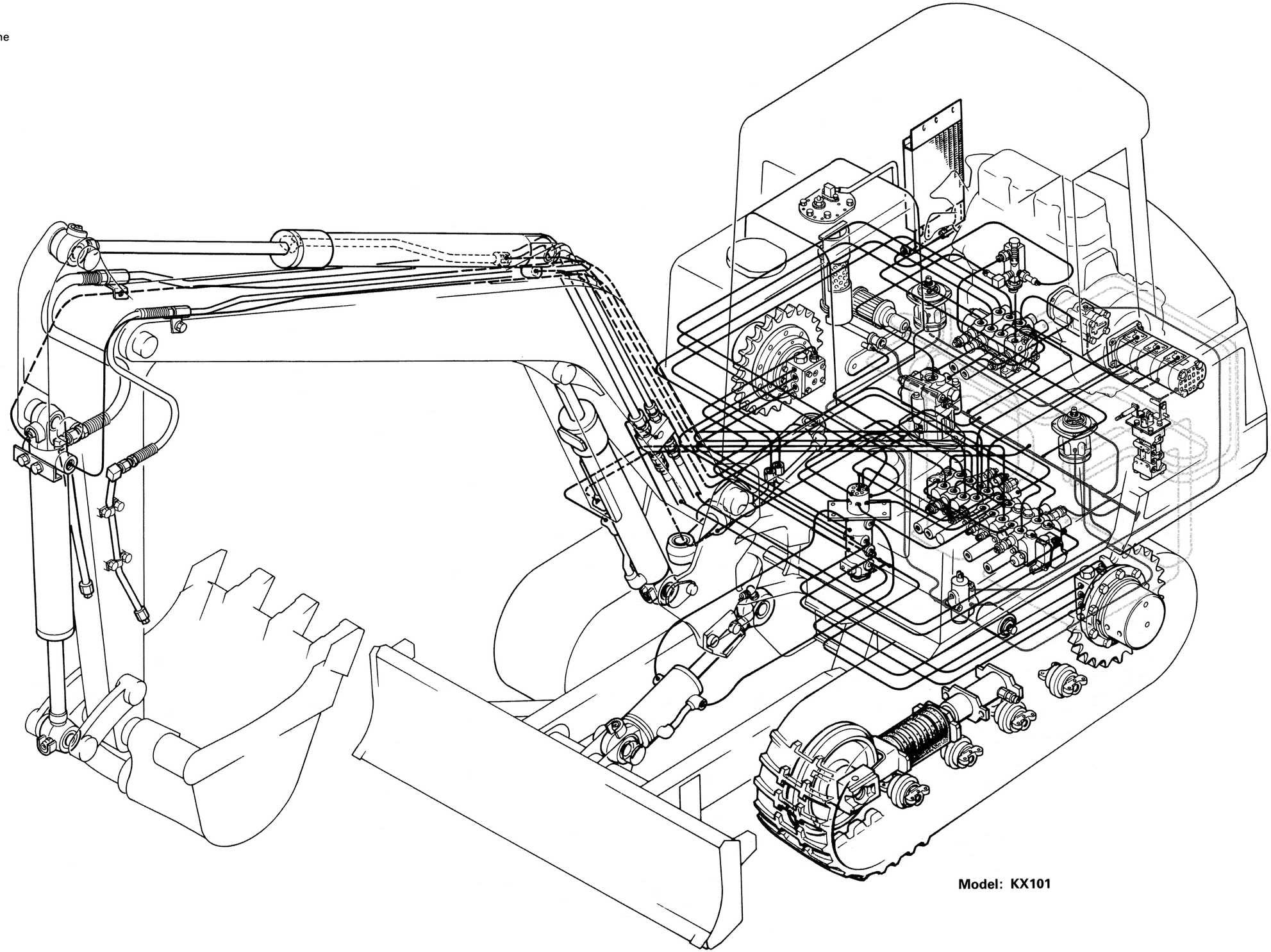

Model: KX101

4. Triple operation (Boom up, arm extend & swivel)

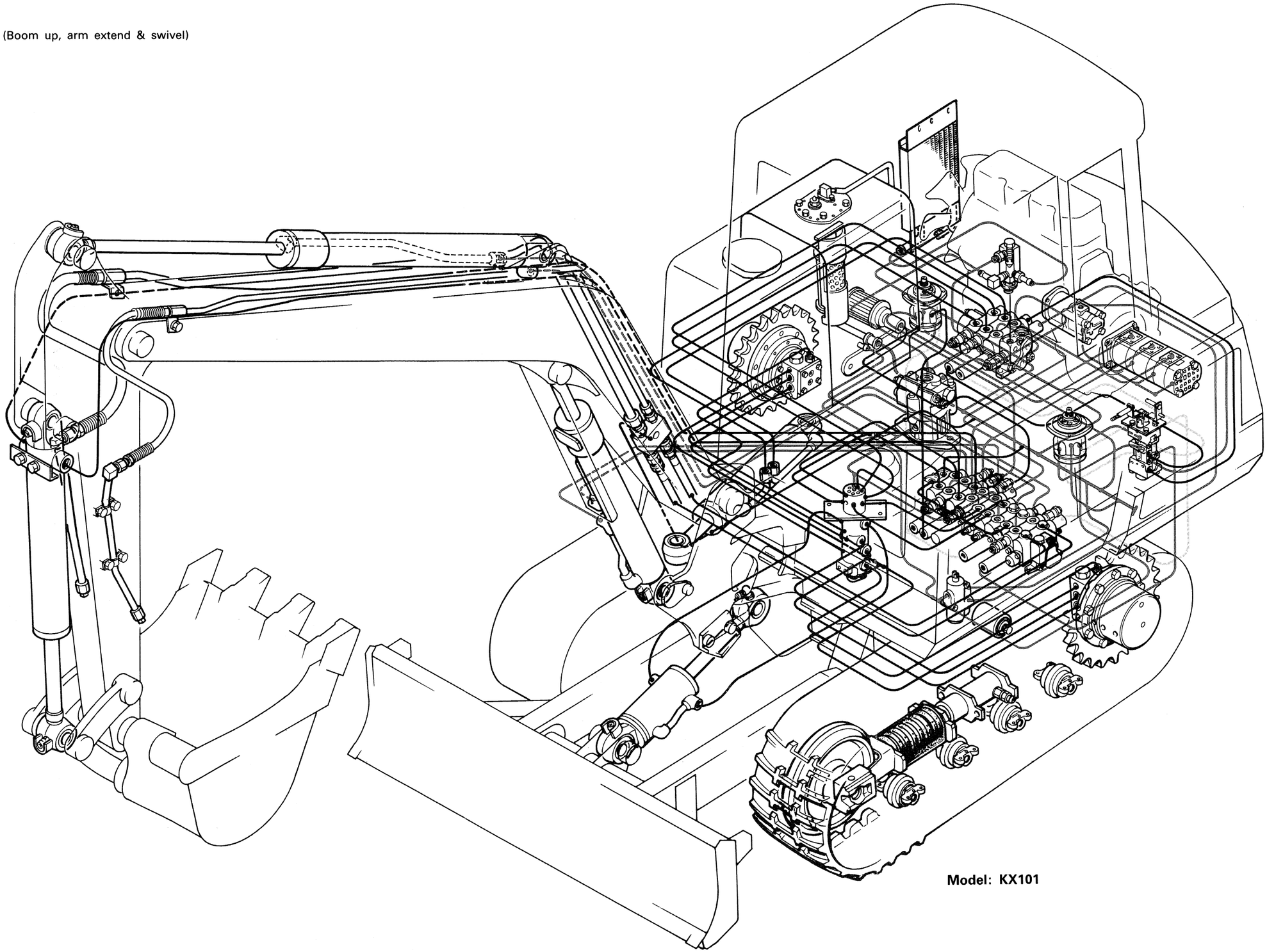

Model: KX101

5. Levelling work (Dozer, travel high)

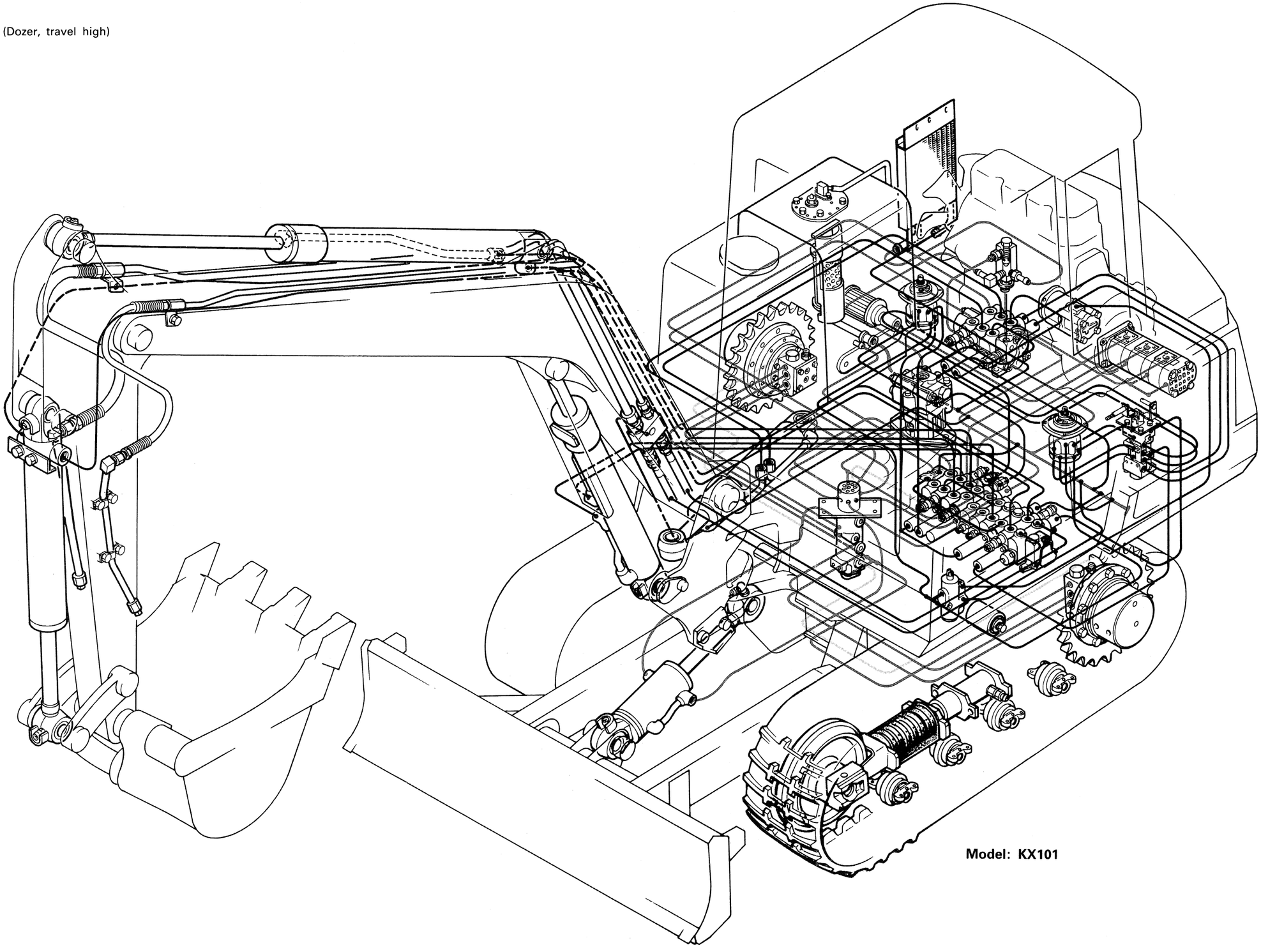

(4) Hydraulic circuit Diagram (ISO pattern)

1. KX36

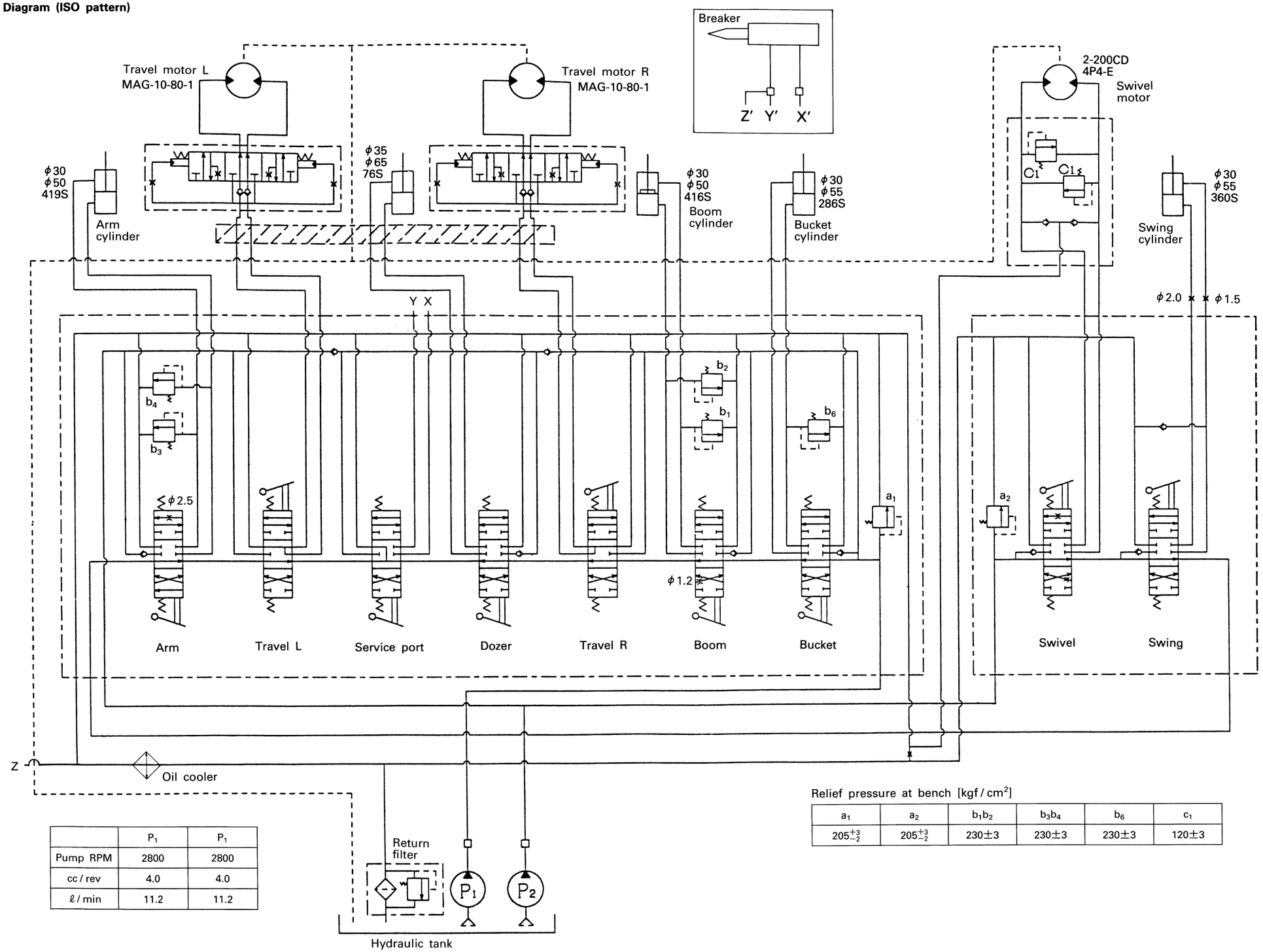

	P_1	P_1
Pump RPM	2800	2800
cc / rev	4.0	4.0
ℓ / min	11.2	11.2

Relief pressure at bench [kgf / cm²]

a_1	a_2	b_1b_2	b_3b_4	b_6	c_1
205^{+3}_{-2}	205^{+3}_{-2}	230±3	230±3	230±3	120±3

2. KX41

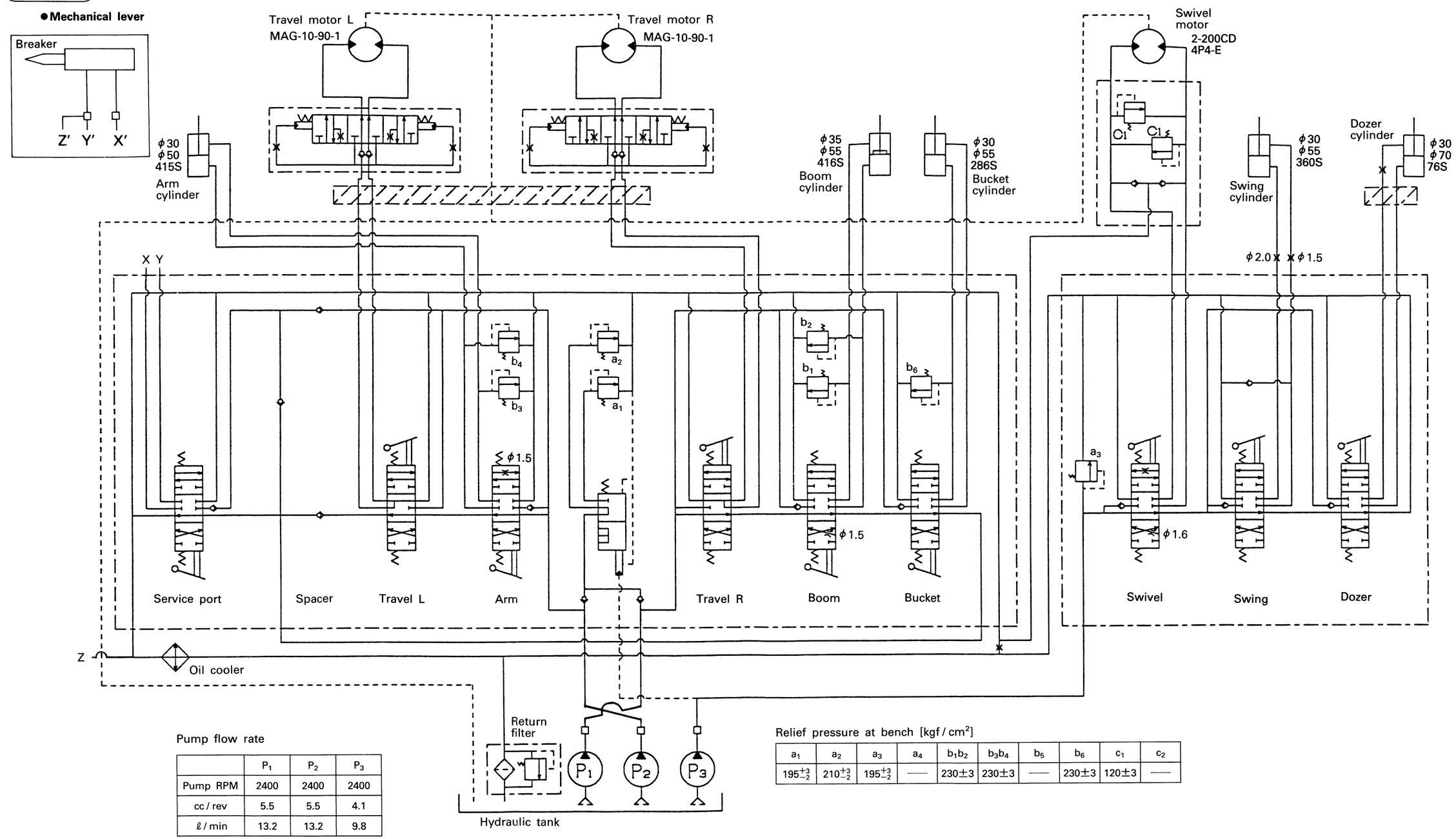

Pump flow rate

	P_1	P_2	P_3
Pump RPM	2400	2400	2400
cc / rev	5.5	5.5	4.1
ℓ / min	13.2	13.2	9.8

Relief pressure at bench [kgf / cm²]

a_1	a_2	a_3	a_4	b_1b_2	b_3b_4	b_5	b_6	c_1	c_2
195^{+3}_{-2}	210^{+3}_{-2}	195^{+3}_{-2}	—	230±3	230±3	—	230±3	120±3	—

3. KX41

● Pilot control lever

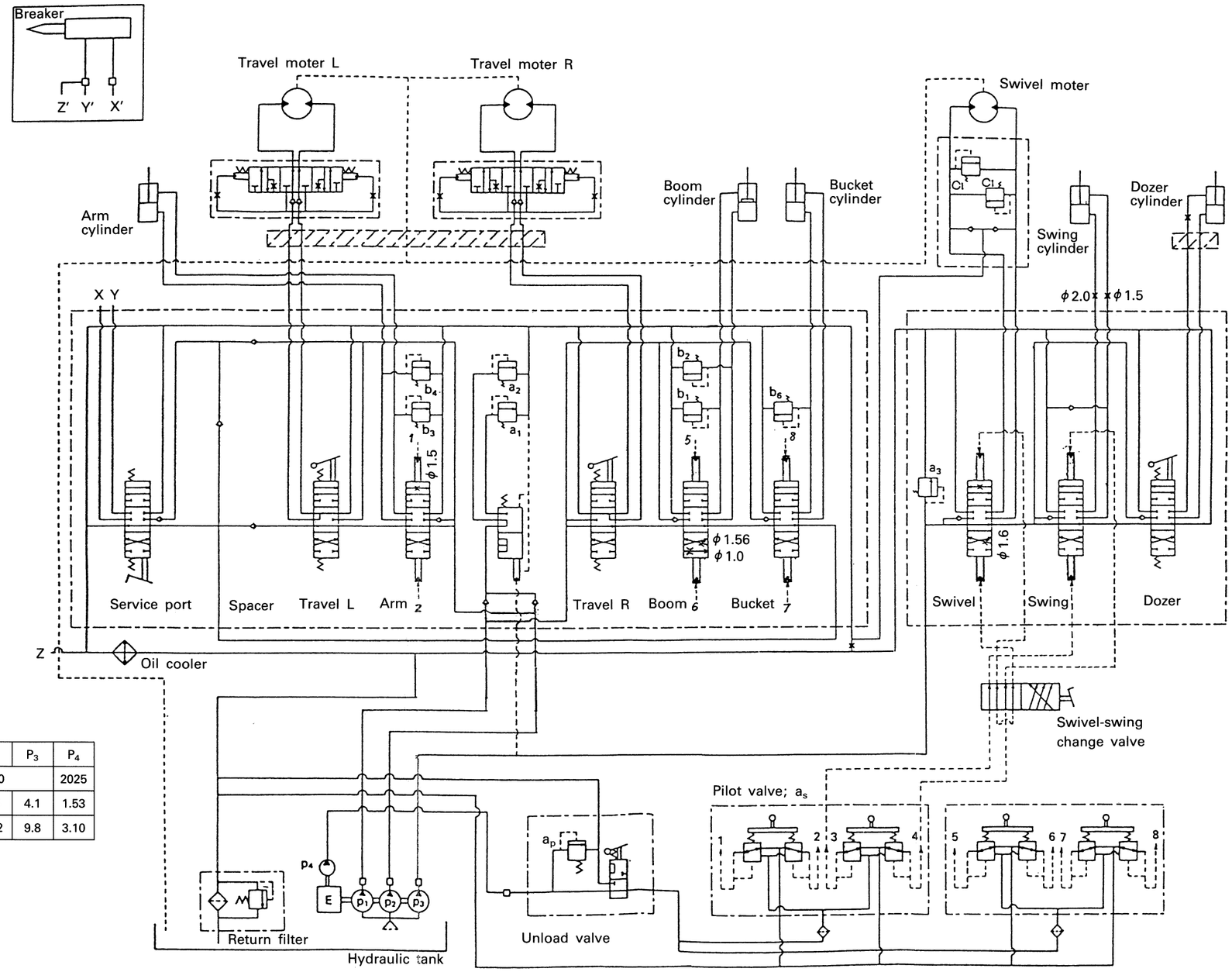

Pump flow rate

	P_1	P_2	P_3	P_4
Pump RPM	2400			2025
cc / rev	5.5	5.5	4.1	1.53
ℓ / min	13.2	13.2	9.8	3.10

Relief pressure at bench [kgf / cm^2]

a_1	195^{+3}_{-2}
a_2	210^{+3}_{-2}
a_3	195^{+3}_{-2}
b_1b_2	230±3
b_3b_4	230±3
b_6	230±3
c_1	120±3
a_p	20～27
a_s	6.5±0.75 17.5^{+2}_{0}

4. KX61

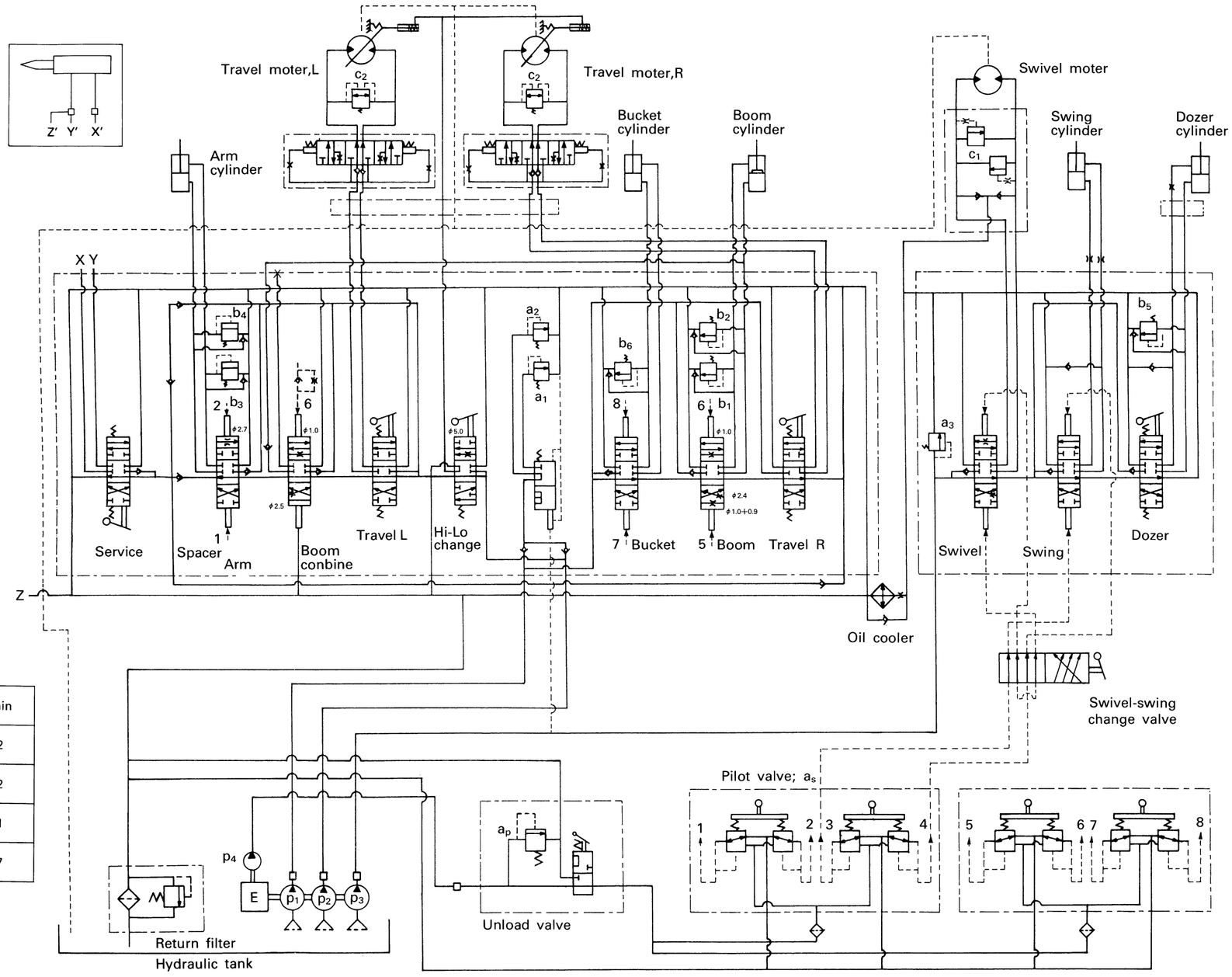

Pump flow rate

KX61	Pump RPM	cc / rev	ℓ / min
P_1	3000	9.4	28.2
p_2	3000	9.4	28.2
p_3	3000	5.7	17.1
p_4	$3000\times\frac{27}{32}=2531$	1.53	3.87

Relief pressure at bench [kgf / cm^2]

Relief valve	KX61
a_1	150^{+3}_{-2}
a_2	165^{+3}_{-2}
a_3	150^{+3}_{-2}
a_4	——
$b_1 \cdot b_2$	245±3
$b_3 \cdot b_4$	245±3
b_5	245±3
b_6	245±3
c_1	135±3
c_2	255±10
a_p	20～27
a_s	6.5 ± 0.75 17.5^{+2}_{0}

5. KX71

- Hi-Low travel speed
- Pilot control

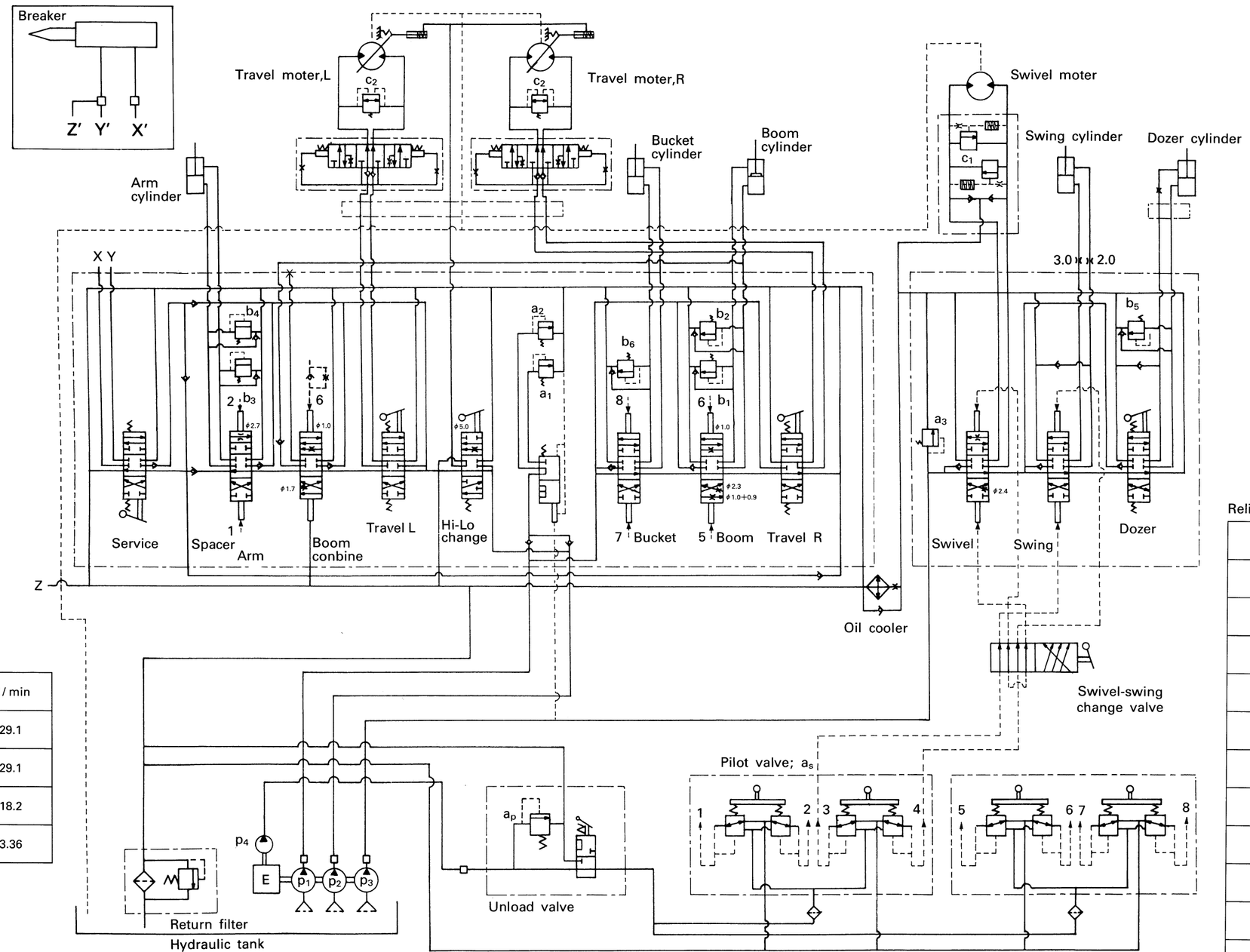

Pump flow rate

KX71	Pump RPM	cc / rev	ℓ / min
P_1	2600	11.2	29.1
p_2	2600	11.2	29.1
p_3	2600	7.0	18.2
p_4	$2600 \times \frac{27}{32} = 2194$	1.53	3.36

Relief pressure at bench [kgf / cm²]

a_1	175^{+3}_{-2}
a_2	200^{+3}_{-2}
a_3	160^{+3}_{-2}
a_4	——
$b_1 \cdot b_2$	245±3
$b_3 \cdot b_4$	245±3
b_5	245±3
b_6	245±3
c_1	150±3
c_2	255±10
a_p	20～27
a_s	6.5±0.75 17.5^{+2}_{0}

6. KX71

- **Mechanical control**
- **One stage travel speed**

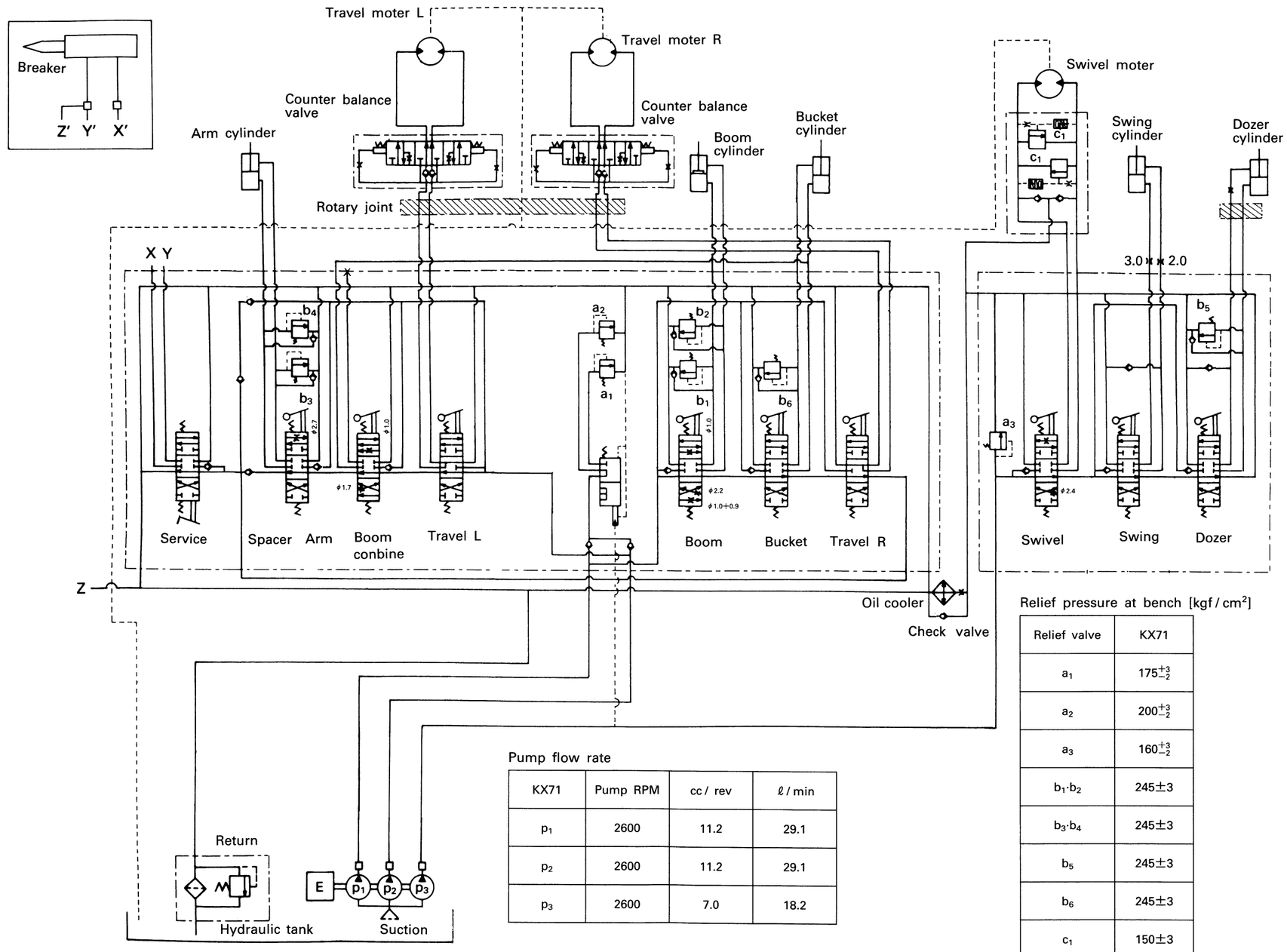

Pump flow rate

KX71	Pump RPM	cc / rev	ℓ / min
p_1	2600	11.2	29.1
p_2	2600	11.2	29.1
p_3	2600	7.0	18.2

Relief pressure at bench [kgf / cm²]

Relief valve	KX71
a_1	175^{+3}_{-2}
a_2	200^{+3}_{-2}
a_3	160^{+3}_{-2}
$b_1 \cdot b_2$	245±3
$b_3 \cdot b_4$	245±3
b_5	245±3
b_6	245±3
c_1	150±3
c_2	255±10

7. KX101

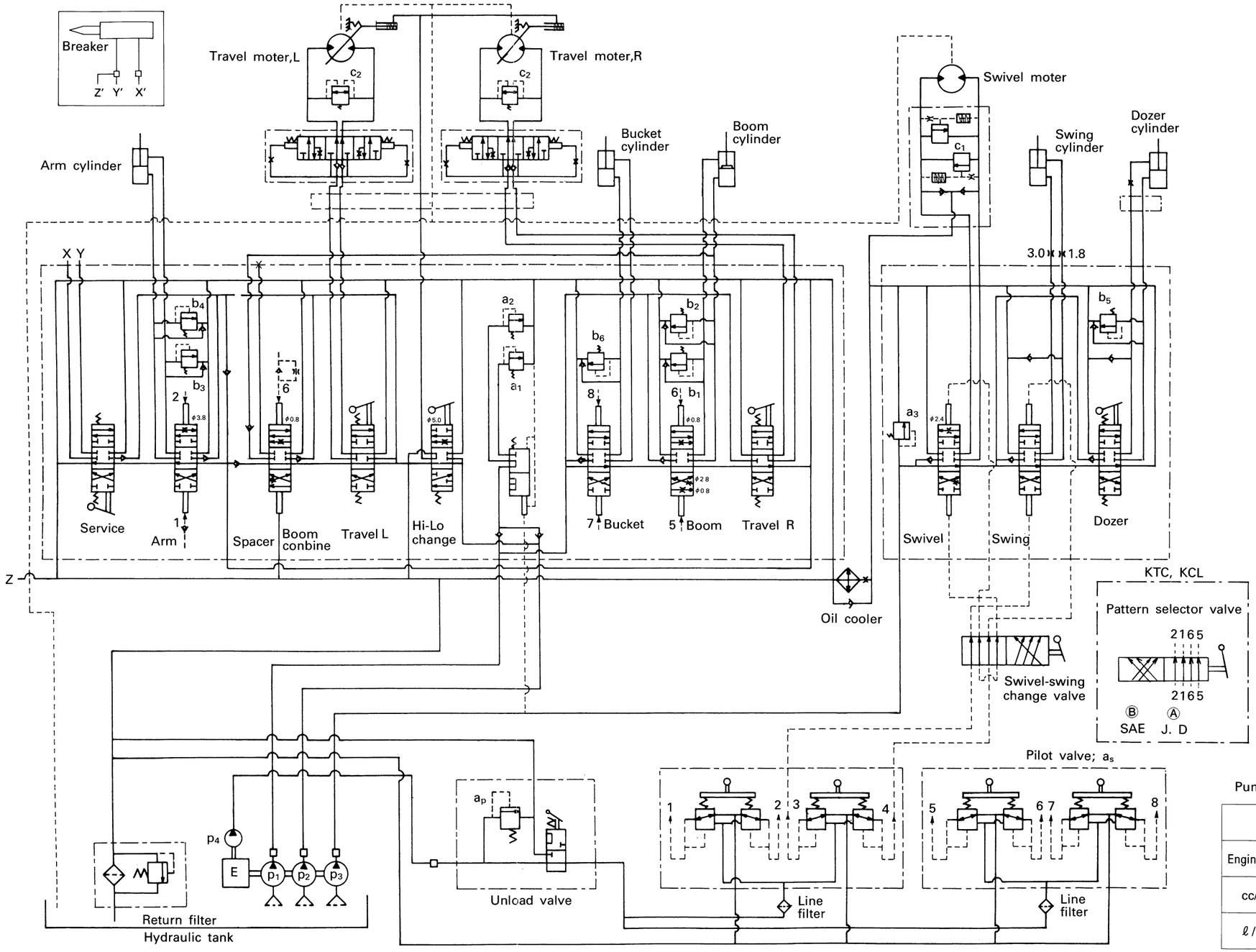

Relief pressure at bench [kgf/cm²]

a_1	160^{+3}_{-2}
a_2	210^{+3}_{-2}
a_3	195^{+3}_{-2}
a_4	——
$b_1 \cdot b_2$	245±3
$b_3 \cdot b_4$	245±3
b_5	245±3
b_6	245±3
c_1	203±3
c_2	255±10
a_p	20~27
a_s	6.5±0.75 17^{+2}_{0}

Pump flow rate

	p_1	p_2	p_3	p_4
Engine RPM	2450	2450	2450	$2450 \times \frac{1}{2} = 1225$
cc/rev	13.2	13.2	8.7	3.07
ℓ/min	32.3	32.3	21.3	3.76

8. KX151

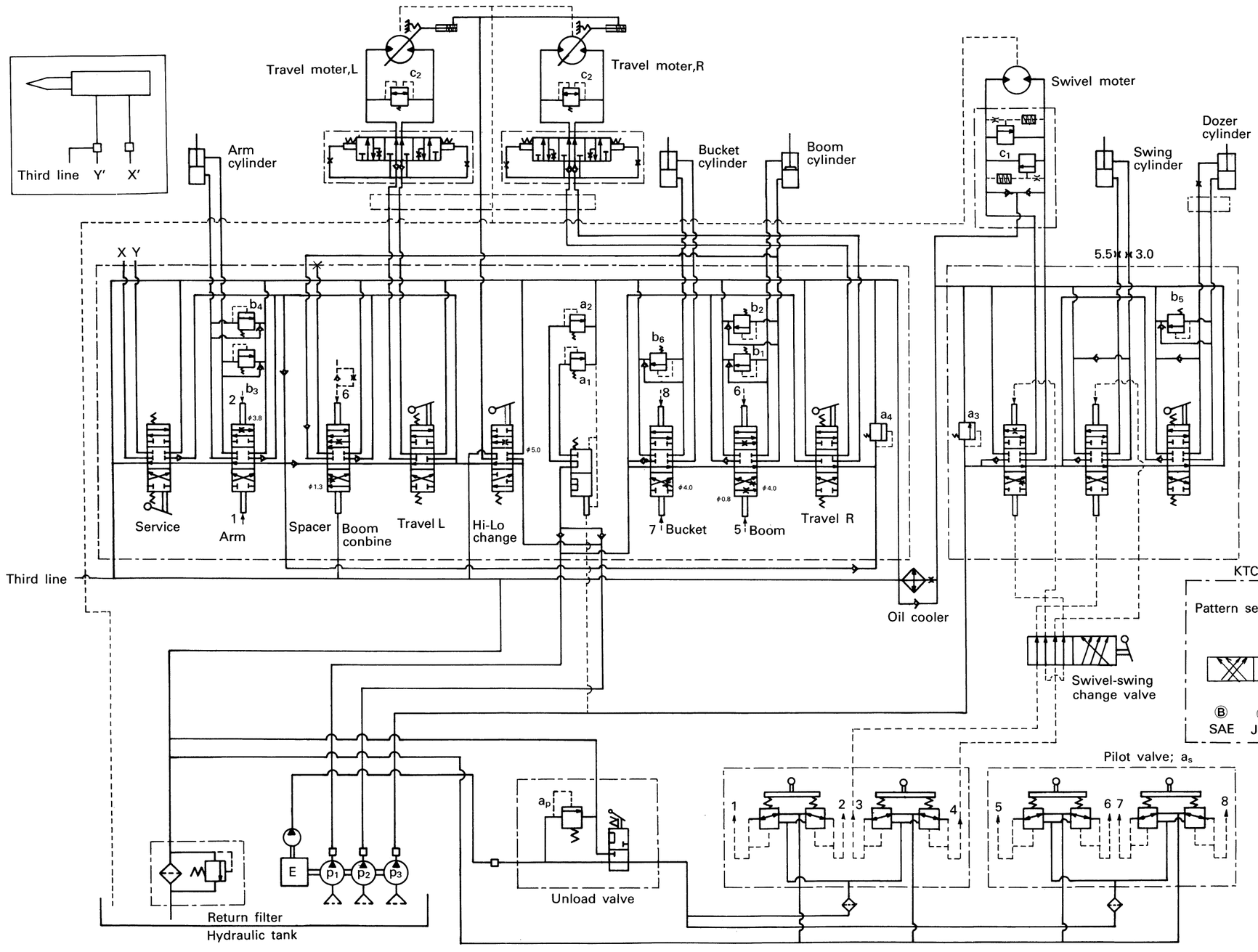

Relief pressure at bench [kgf/cm²]

a_1	190^{+3}_{-2}
a_2	210^{+3}_{-2}
a_3	190^{+3}_{-2}
a_4	140^{+3}_{-2}
$b_1 \cdot b_2$	245±3
$b_3 \cdot b_4$	245±3
b_5	245±3
b_6	245±3
c_1	203±3
c_2	255±10
a_p	20~27
a_s	6.5 ± 0.75 17^{+2}_{0}

Pump flow rate

	p_1	p_2	p_3	p_4
Engine RPM	2800	2800	2800	$2800 \times \frac{1}{2} = 1400$
cc/rev	13.2	13.2	11.2	3.07
ℓ/min	37.0	37.0	31.4	4.30

[2] Pump

(1) Function & structure

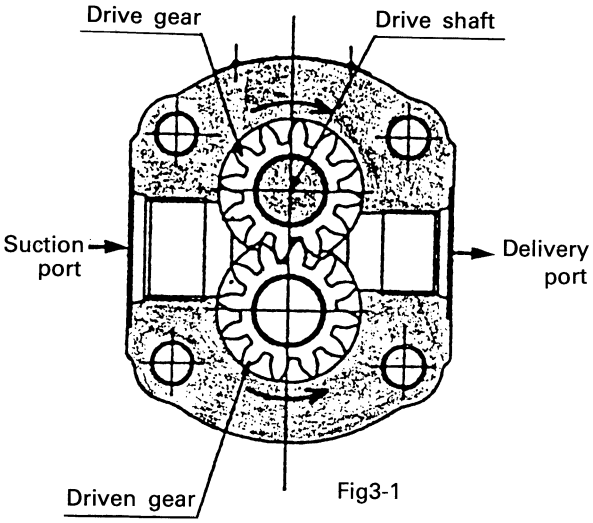

Fig3-1

As the drive shaft rotates as shown in Fig. 3-1, the driving gear and driven gear rotate in the direction of the respective arrows. Oil flowed in from the suction side comes into spaces and is transferred along the housing to the delivery side. Besides, this pump adopts a pressure loading mechanism to achieve a high volumetric efficiency. Bushes ㉕ & ㉖ as shown in Fig. 3-2 are of the movable type that can move in the axial direction and are pressed against the side of gears ⑬, ⑭, ⑮, ⑯ & ⑰ by the interference of the seal element 8 in the no-load time. Furthermore, they are so designed that they are reversely pressed with a force slightly larger than a force required to pull them apart from gears together with a rise of the negative load pressure by leading the delivery pressure to the back of bushes in time of loading in order to keep a clearance between the bush and the gear's side at a proper value.

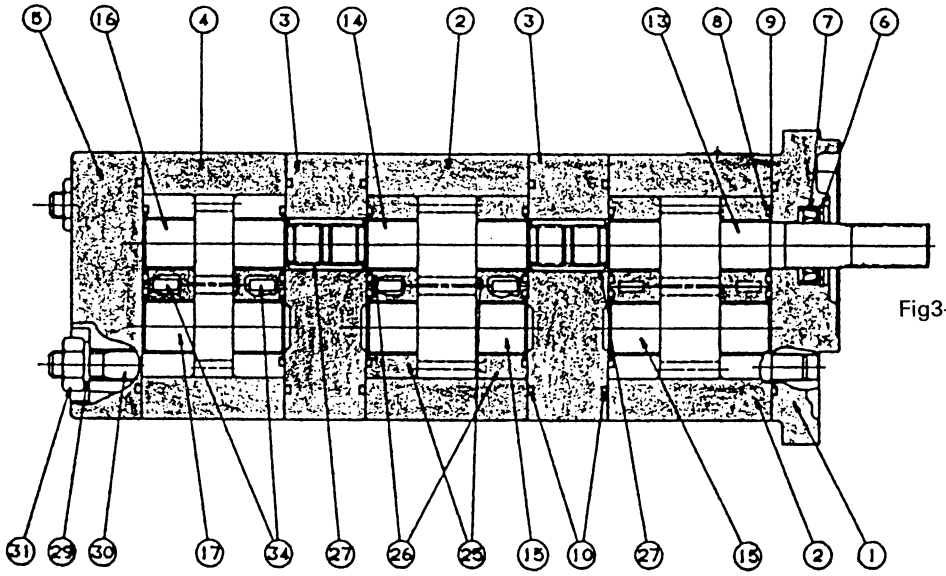

Fig3-2

Model	KX36	KX41		KX61		KX71		KX101		KX151	
Gear pump assy code No.	P_1+P_2	$P_1+P_2+P_3$	P4	$P_1+P_2+P_3$	P_4	$P_1+P_2+P_3$	P_4	$P_1+P_2+P_3$	P_4	$P_1+P_2+P_3$	P_4
	68151-96011	68191-61112	55411-35201	68311-61111	55411-35201	68391-61111	55411-35201	68651-61111	59140-26201	68671-61111	59140-26201
Maker	Kayaba	ZEXEL	Kubota	Kayaba	Kubota	ZEXEL	Kubota	ZEXEL	Kubota	ZEXEL	Kubota
Type	KP-05 40-40csss	HY / ZFFFS11 / 5.5+5.5+4.1R	GPO-15L	KPR4-9-9-6CK	GPO-15L		GPO-15L		GPO-30-2		GPO-30-2
Displacement [cc / rev]	4.0+4.0	5.5+5.5+4.1	1.53	9.4+9.4+5.7	1.53	11.2+11.2+7.0	1.53	13.2+13.2+8.7	3.07	13.2+13.2+11.2	3.07
Pump RPM	2800	2400	$2400\times\frac{27}{32}=2025$	3000	$3000\times\frac{27}{32}=2531$	2600	$2600\times\frac{27}{32}=2194$	2450	$2450\times\frac{1}{2}=1225$	2800	$2800\times\frac{1}{2}=1400$
Delivery rate [ℓ / min]	11.2+11.2	13.2+13.2+9.84	3.10	28.2+28.2+17.1	3.87	29.1+29.1+18.2	3.36	32.3+32.3+21.3	3.76	37.0+37.0+31.4	4.30

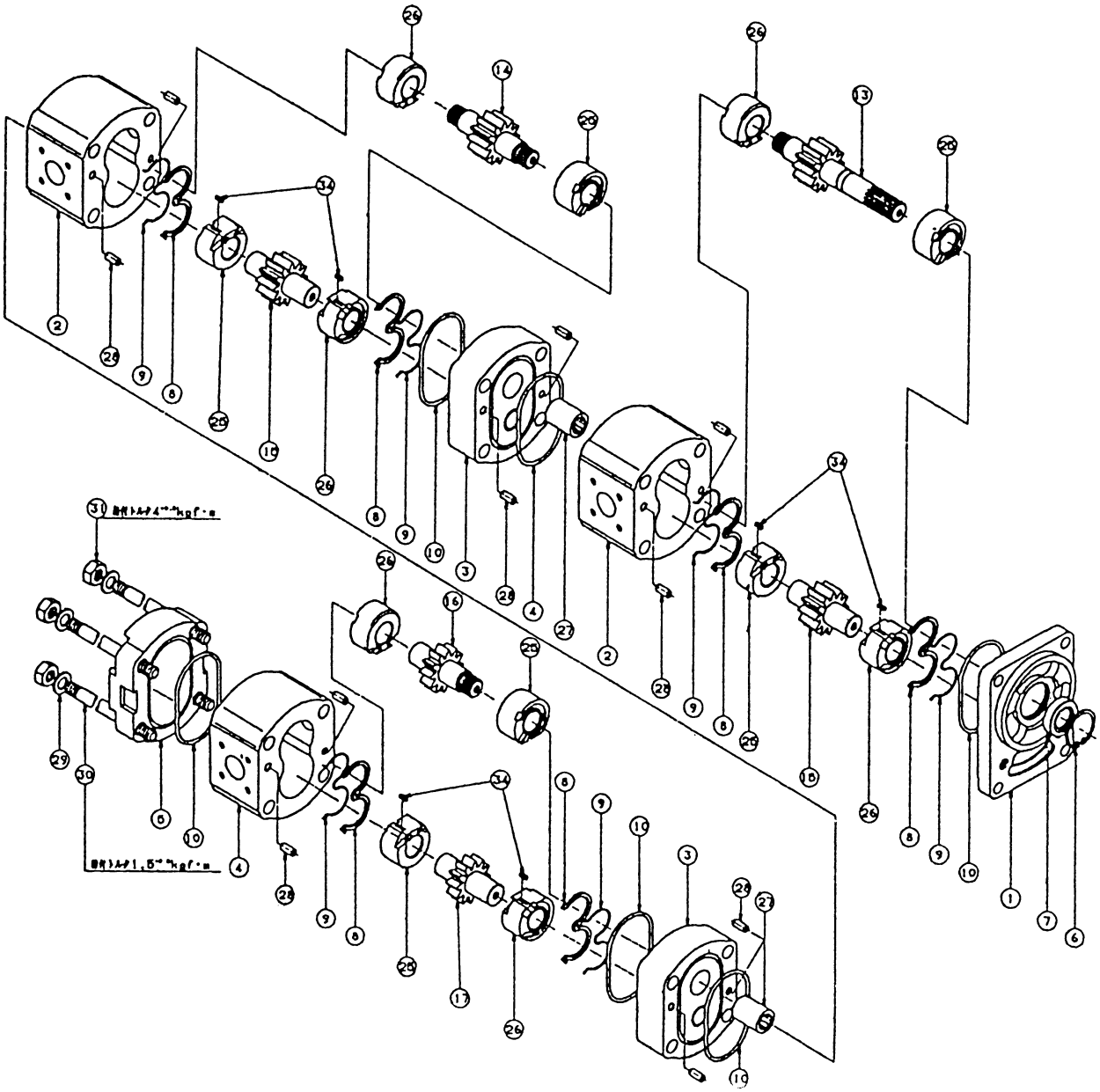

① Flange
② Housing
③ Flange
④ Housing
⑤ Cover
⑥ Snapring
⑦ Oil seal
⑧ Seal element
⑨ Back up element
⑩ O-ring
⑬~⑰ Gear
㉕ Bush
㉖ Bush
㉗ Coupling
㉘ Pin
㉙ Washer
㉚ Bolt
㉛ Nut
㉞ Key
Seal kit: ⑦⑧⑨⑩

● Main pump mounting

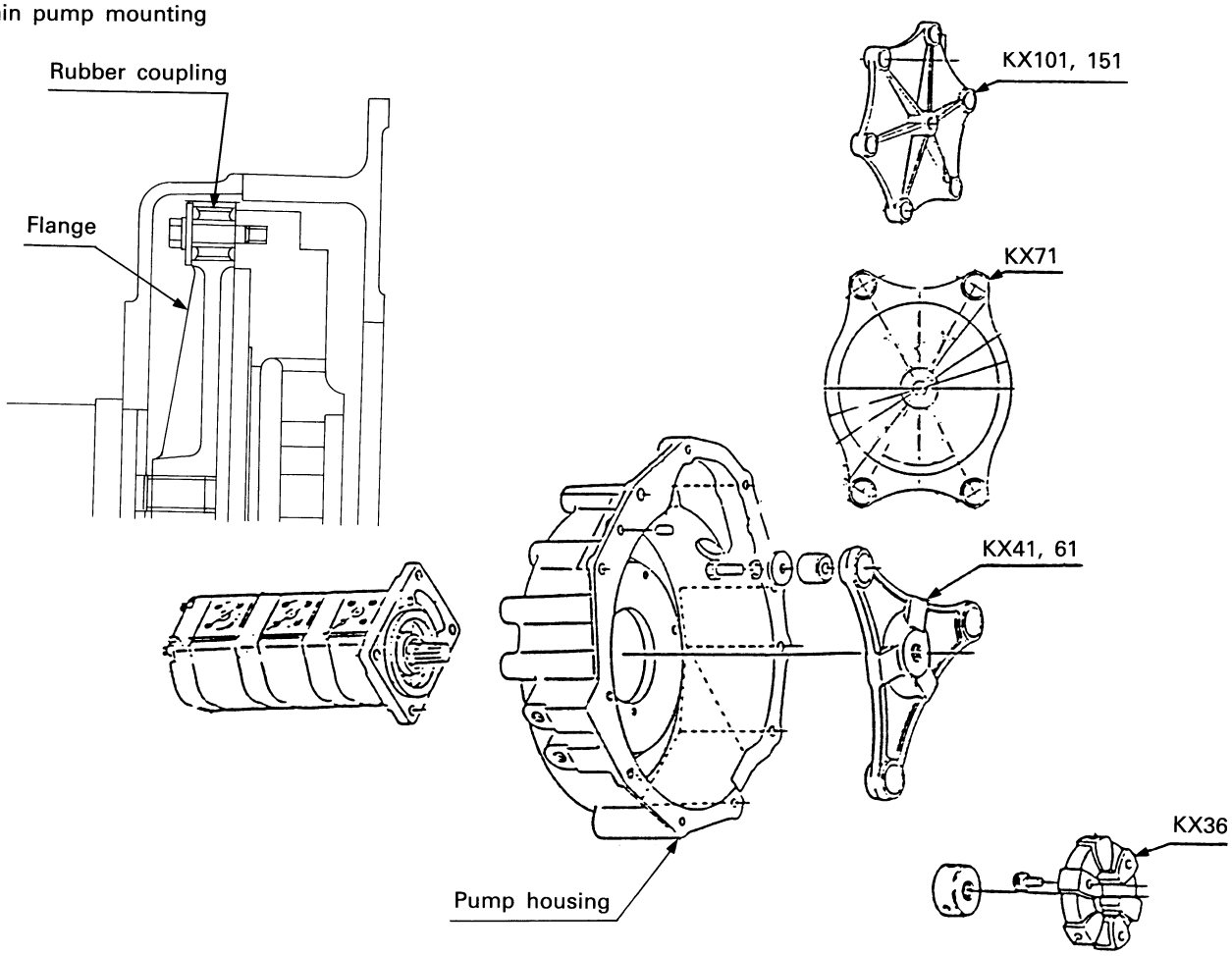

● Fourth pump

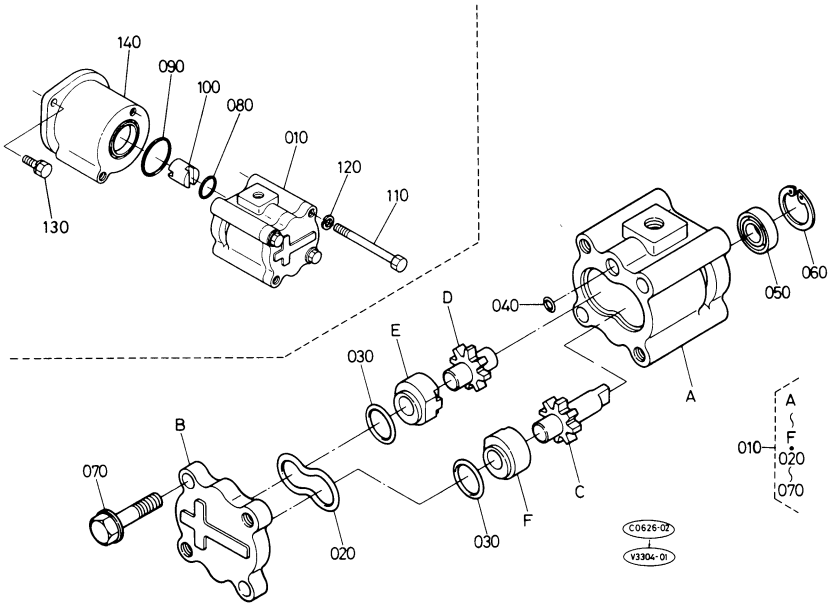

(KX41,61, 71) Engine model: V1105, V1505

P_4 (Pilot operate pump) is coupled with governer shaft via ordum joint and reduced as bellow.

$$P_4 \text{ pump RPM} = \text{Engine RPM} \times \frac{27}{32}$$

(KX101, 151)

P_4 (Pilot operate pump) is coupled with fuel injection pump shaft via oldum joint (100).

$$P_4 \text{ pump RPM} = \frac{1}{2} \text{ Engine RPM}$$

[3] Pilot remote control system

(1) Outline

Pilot remote control system is used to reduce the operating force of the lever instead of the mechanical linkage system. KX Series are is equipped with pilot remote control system to operate the boom, arm, bucket and swing or swivel lever and the mechanical linkage system is used to operate traveling, dozer and service port.

The pilot circuit consists of the pilot pump ①, unload valve ③, two pilot valves ② and control valves ④. The pilot pump, located at the fuel cam shaft, receives the oil from the hydraulic tank ⑧ through the suction filter ⑦. The discharged oil from the pilot pump ① flows to the pilot valves ② through the unload valve ③ and the filter ⑥.

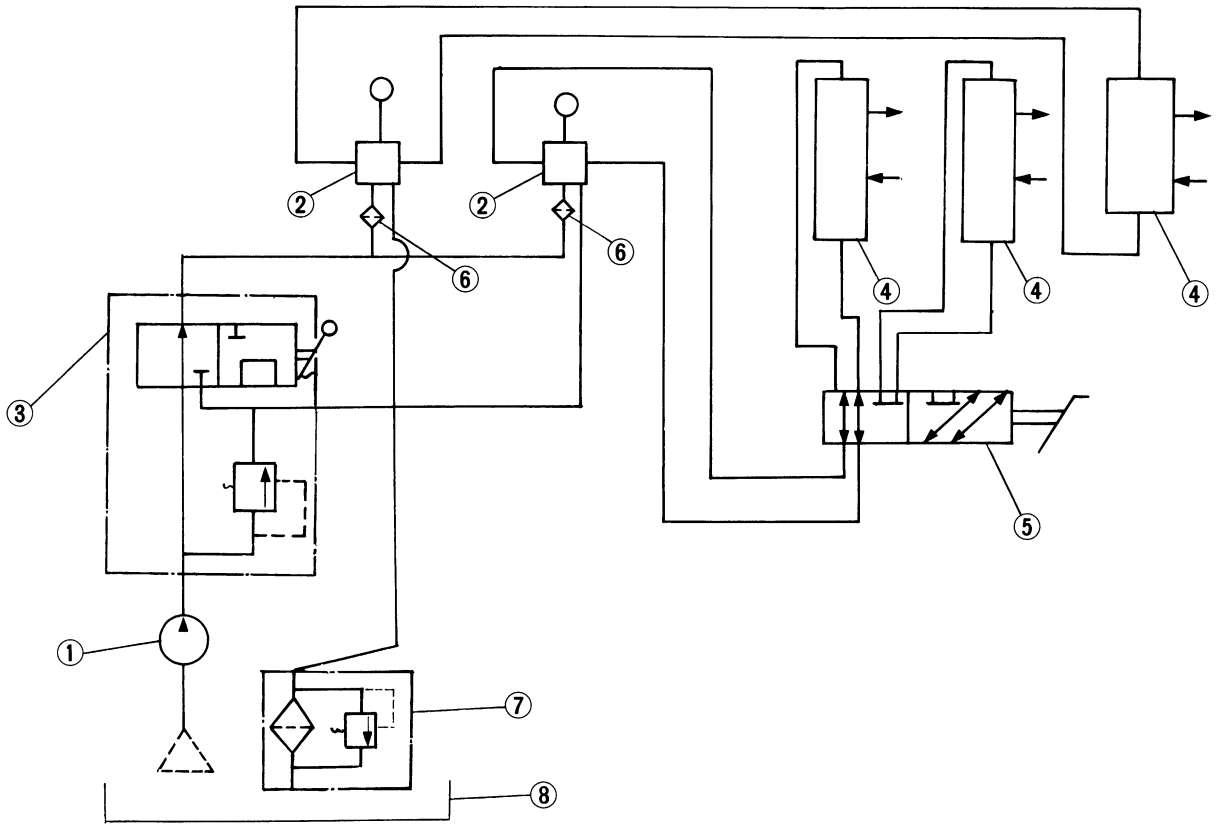

① Pilot pump
② Pilot valve
③ Unload valve
④ Control valve
⑤ Switching valve
⑥ Pilot filter
⑦ Return filter
⑧ Tank

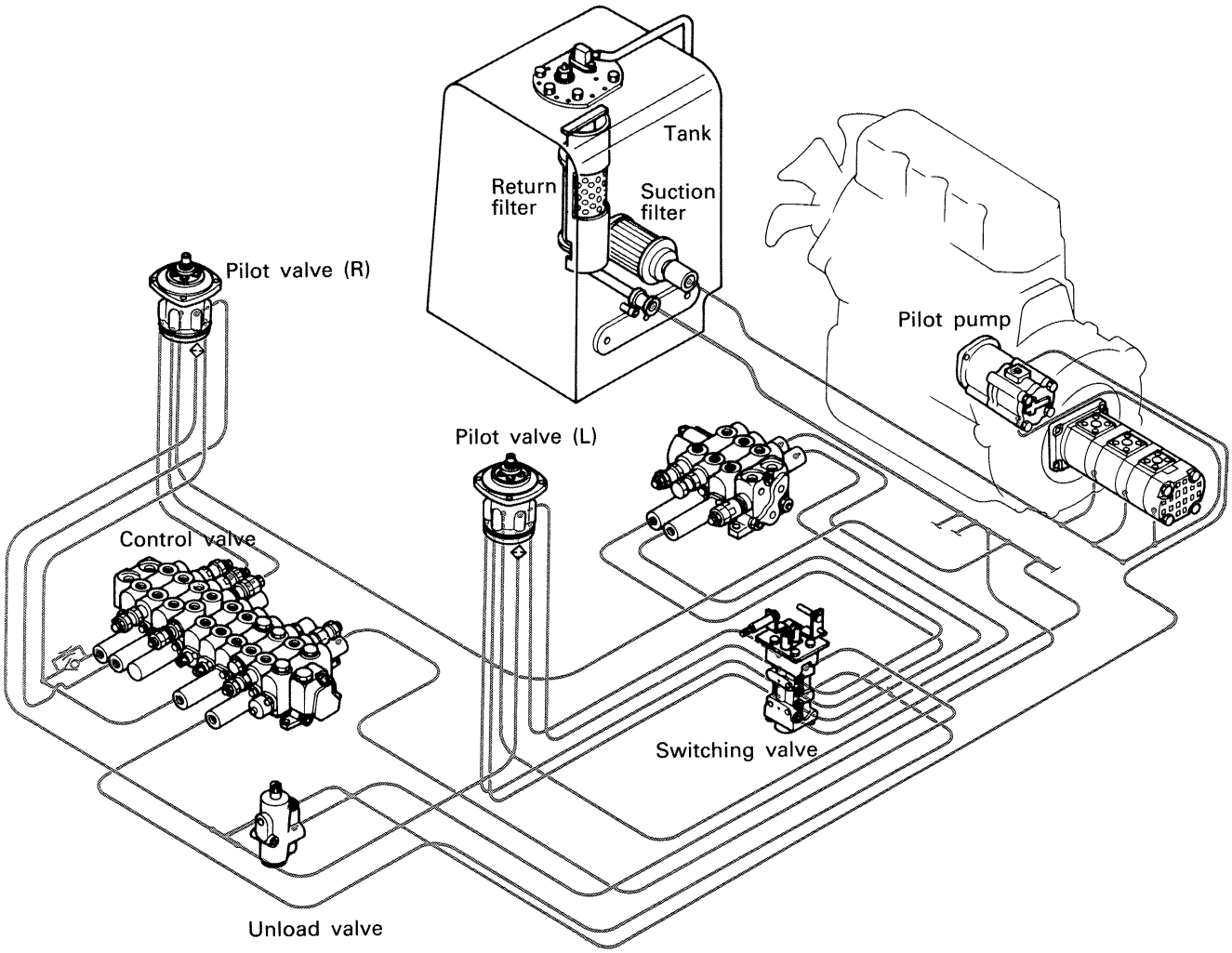

1. At unloaded

When the left-hand control lever stands being backward, the unload valve is shifted to right position in the Fig. and the oil returns to the tank, does not go to the pilot valves. Then the actuators are not operated even if the control levers are operated.

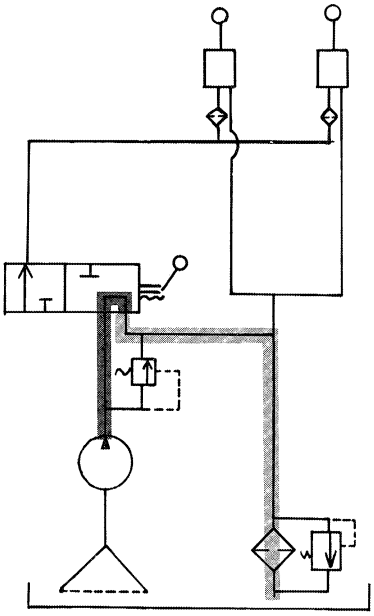

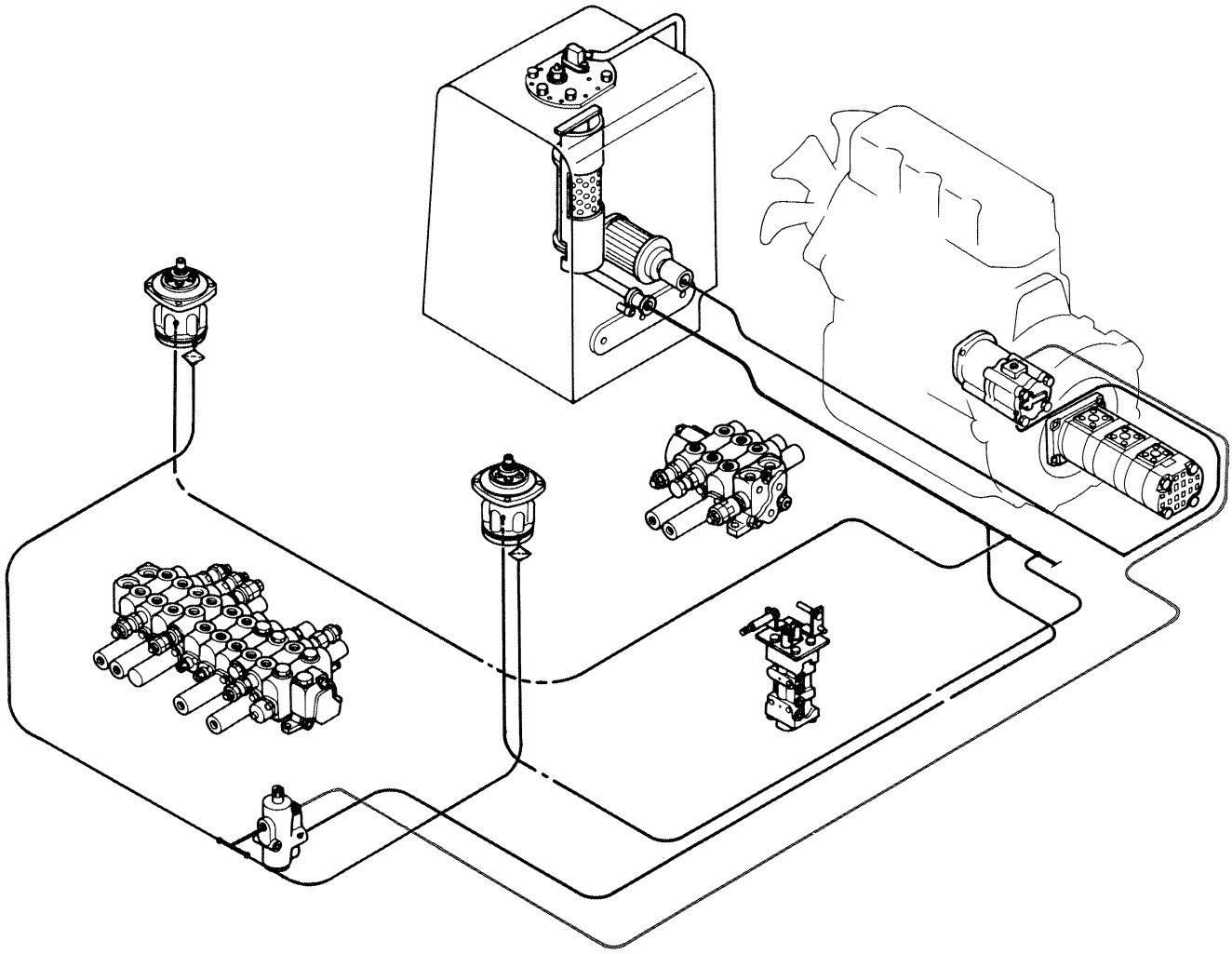

2. At loaded

When the lever stand being locked forward, the unload valve is shifted to left position in the Fig. and oil flows to the pilot valves. The pilot oil pressure in proportion to the lever stroke shifts the control valve to operate the actuators. The pilot relief valve is provided in the unload valve to limit the pilot circuit pressure.

Set pressure: 1.96 Mpa (20 kgf/cm^2, 284 psi) at 2 ℓ/min (0.5 GPM)

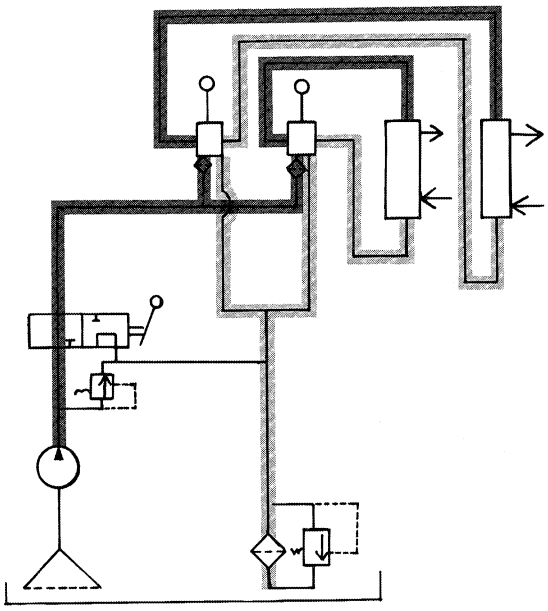

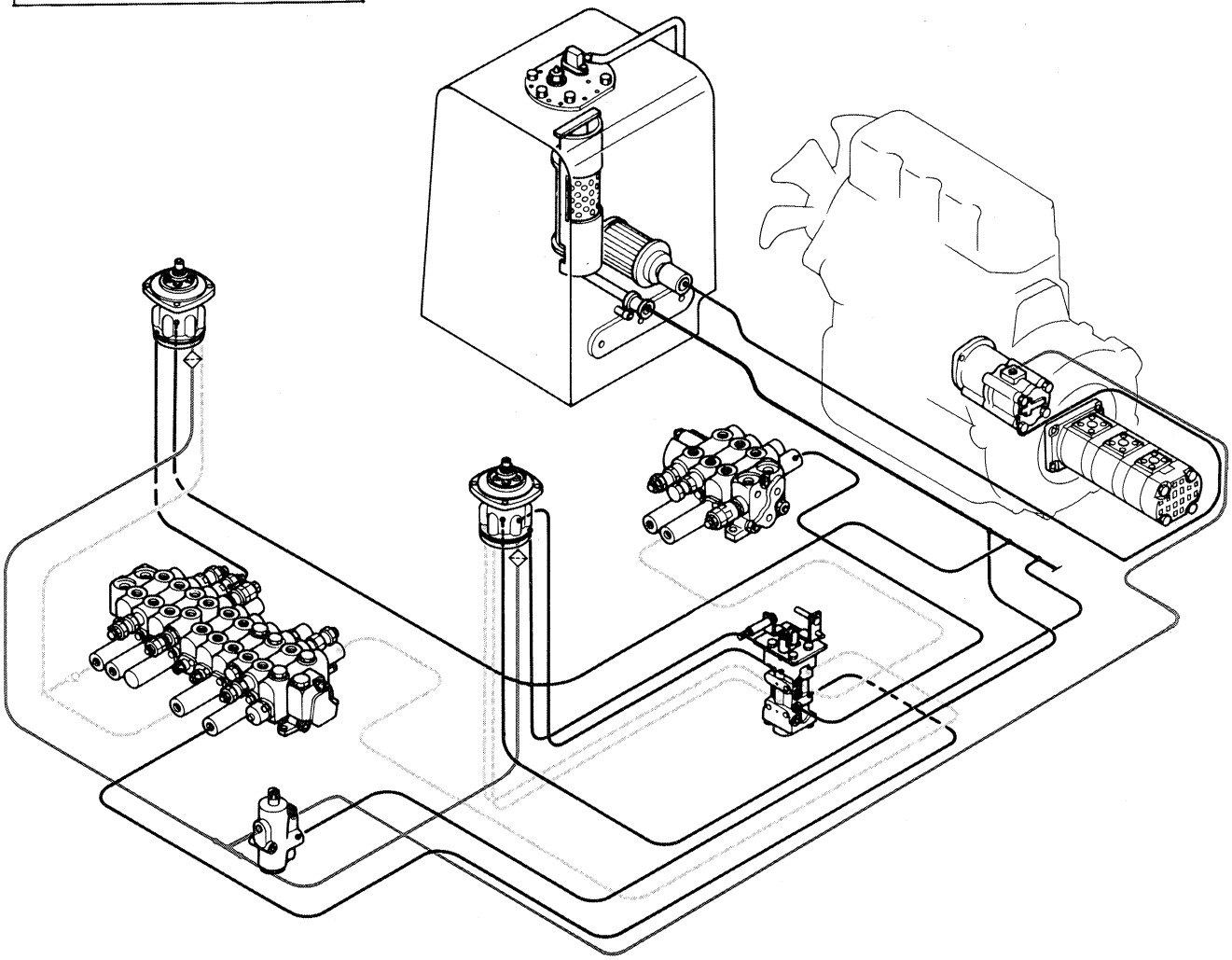

3. Swivel — swing switching

A mechanical link has been used in conventional types of machines to switch between swivel and swing operations. This machine is designed to operate the desired control valve by switching the flow of pilot oil. Switching of the pilot oil circuit is performed by the switching valve. The spool of the switching valve is coupled with the switching pedal by a link mechanism so that swivel or swing operation is selected depending on the pedal position.

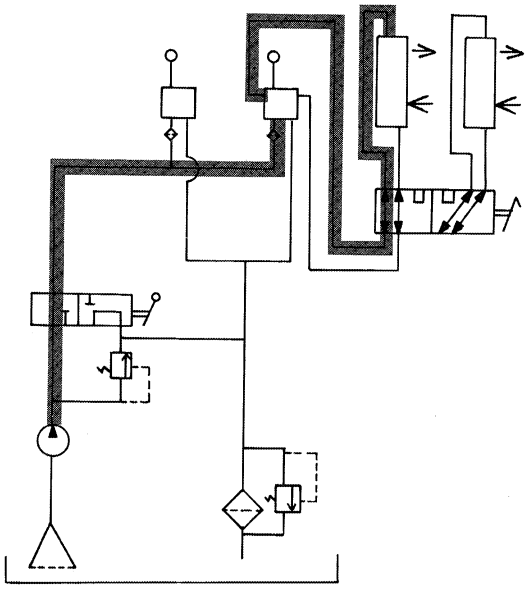

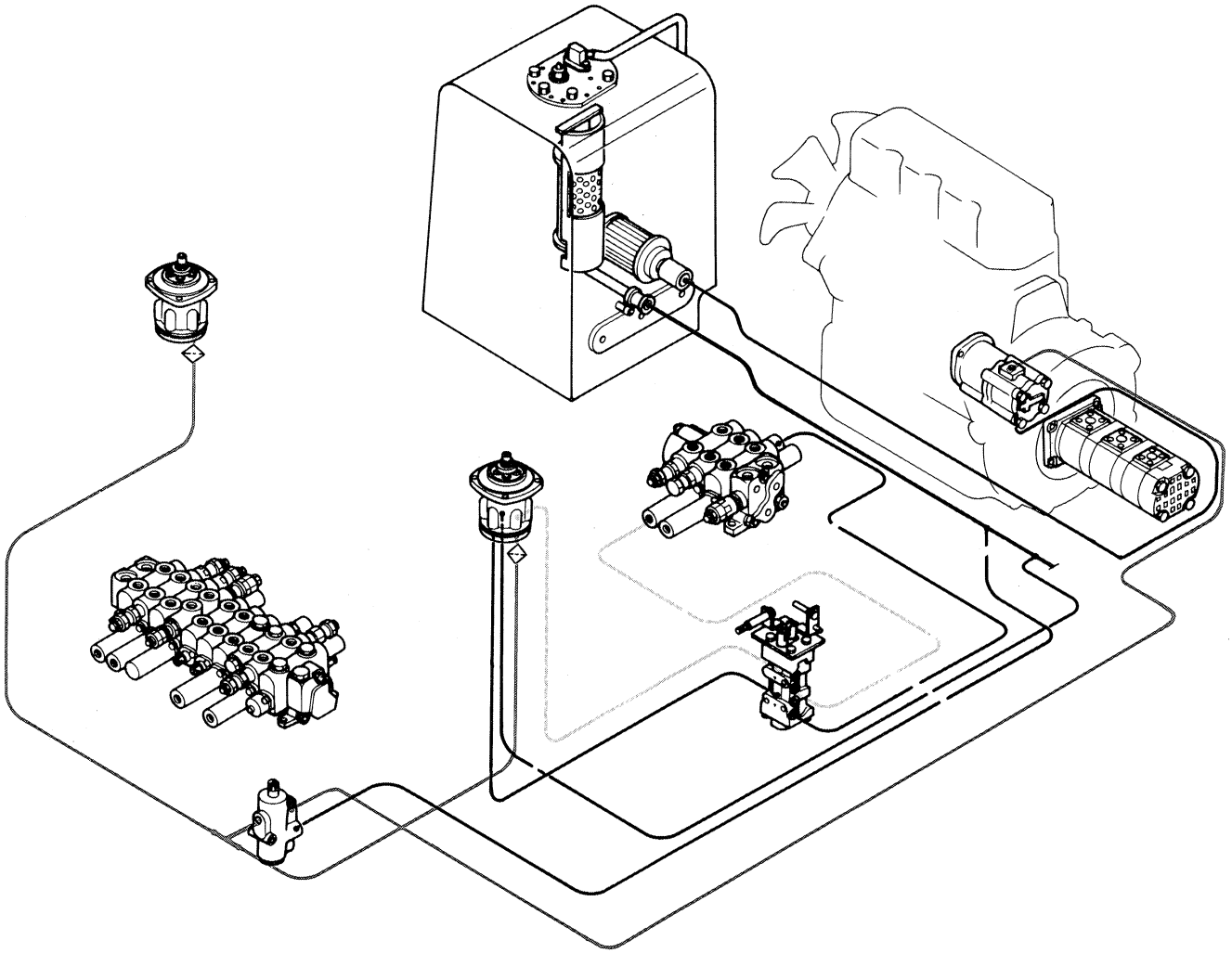

(2) Pilot valve

1) Outline

The pilot valve is a pressure—reducing—valve type remote control valve. Consisting of 4 pressure—reducing—valves controlling secondary pilot pressure. Output pressure is controlled by slant of control lever.

The oil passage in the valve is shown in Fig. . Maker: Kawasaki Heavy Ind. Ltd.

Model		KX41	KX61～151	KH-66～151	KH-191
Code No.		68191-96162	68301-96161	68588-82232	68499-82231
Type		TH40K1123A	TH40K1124	TH40K1118	TH40K1080A
Primary pressure		20^{+4}_{0} kgf/cm^2 at 0.4 ℓ/min, 40 kgf/cm^2 at 6.6 ℓ/min			
Secondary pressure		6.5±0.75→17.5$^{+2}_{0}$ kgf/cm^2			
Allowable back pressure		3 kgf/cm^2			
Allowable oil temp		−20°～95°C			
Operating angle	Single	±19°			
	Maltiple	±25°			
Return spring [kgf]		3～4 (port 1.3), 4～5.3 (port 2.4)		3.0～4.0	5.6～7.3

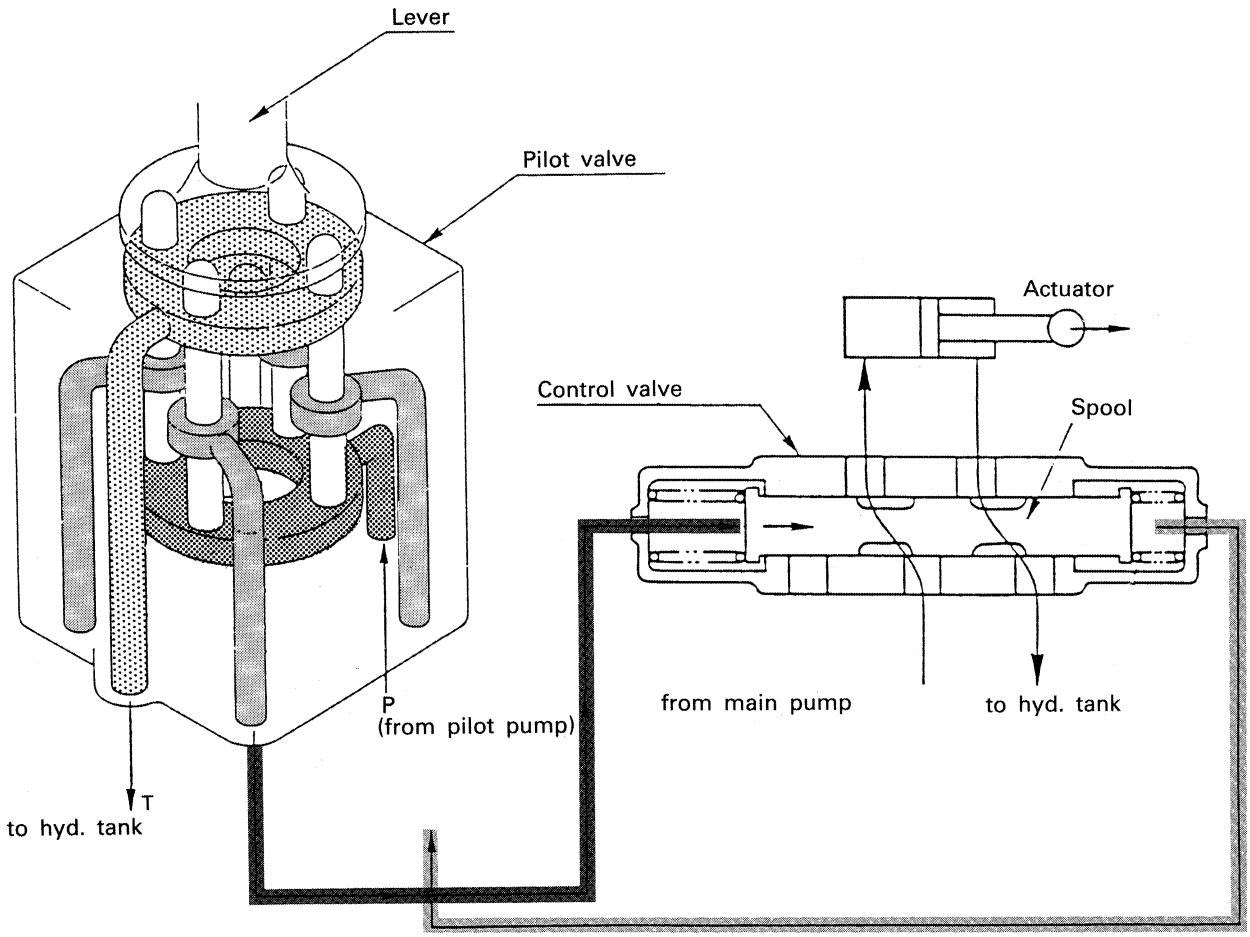

2) Control diagram

① KX41

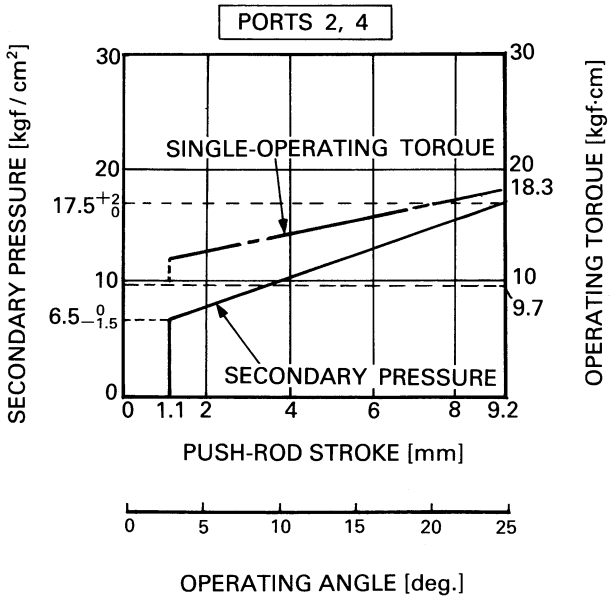

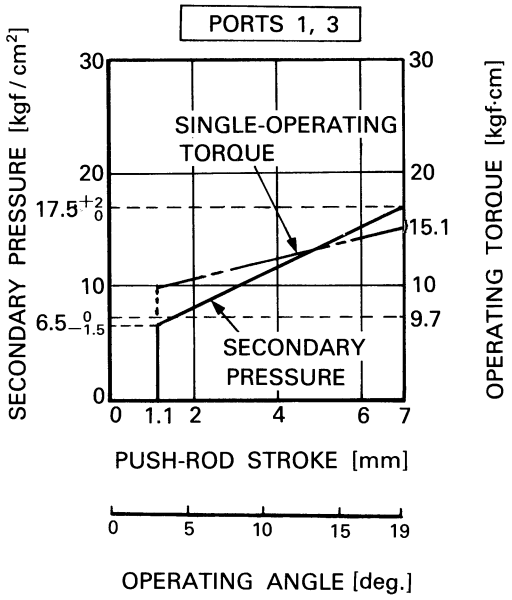

② KX61～151

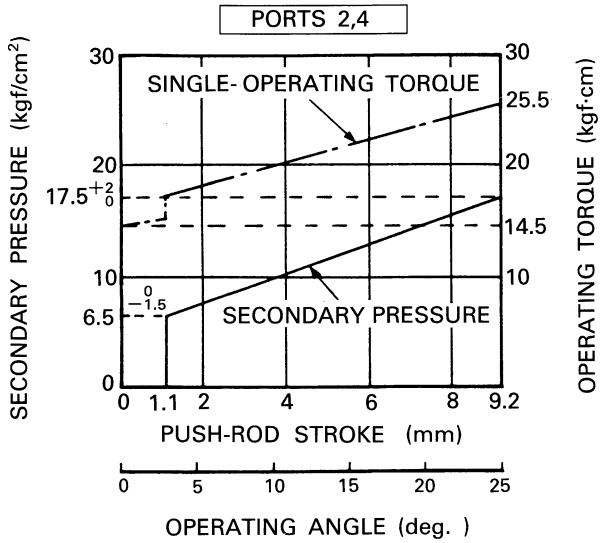

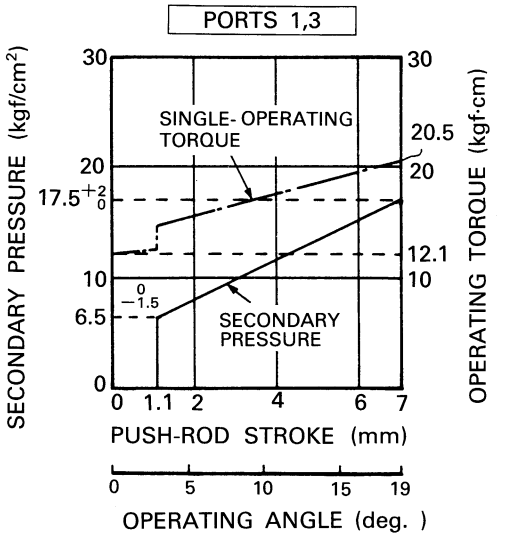

③ KH-66～151

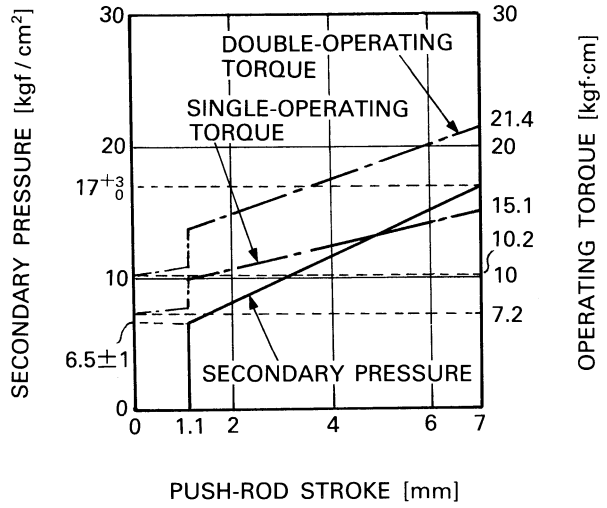

④ KH-191

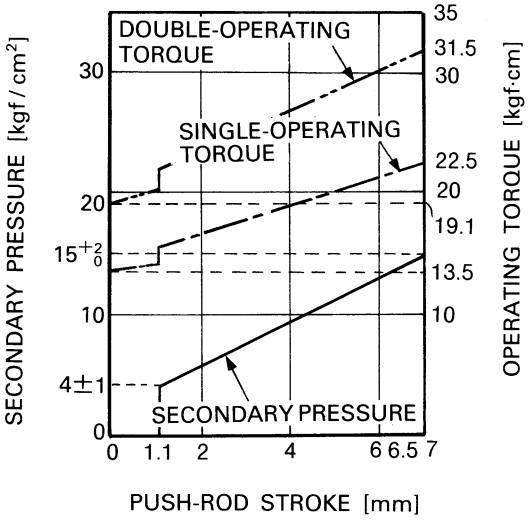

3) Structure

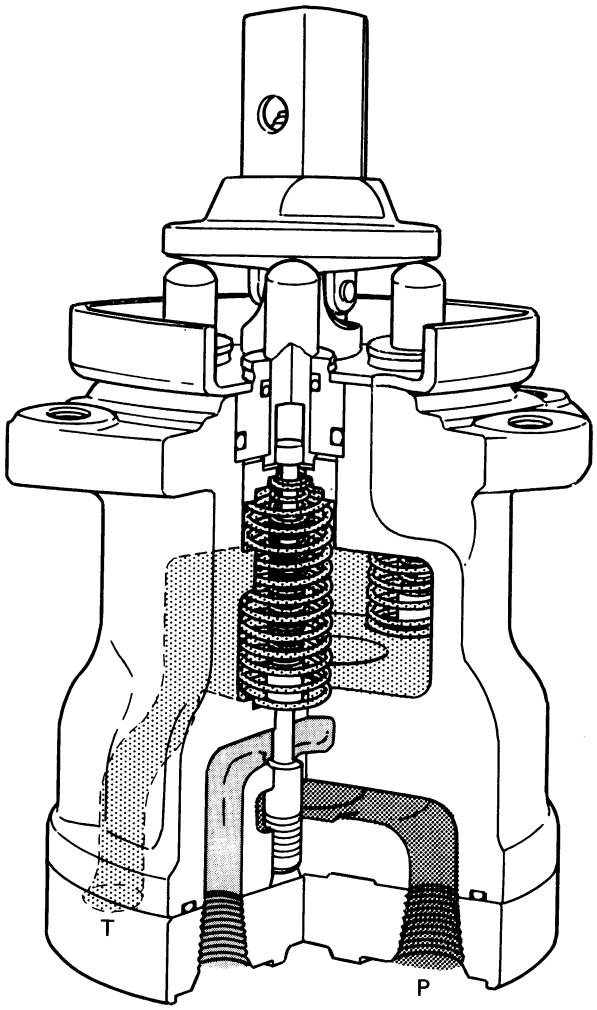

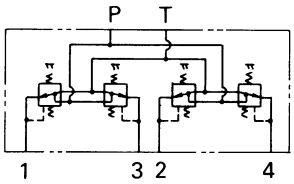

Hydraulic symbol

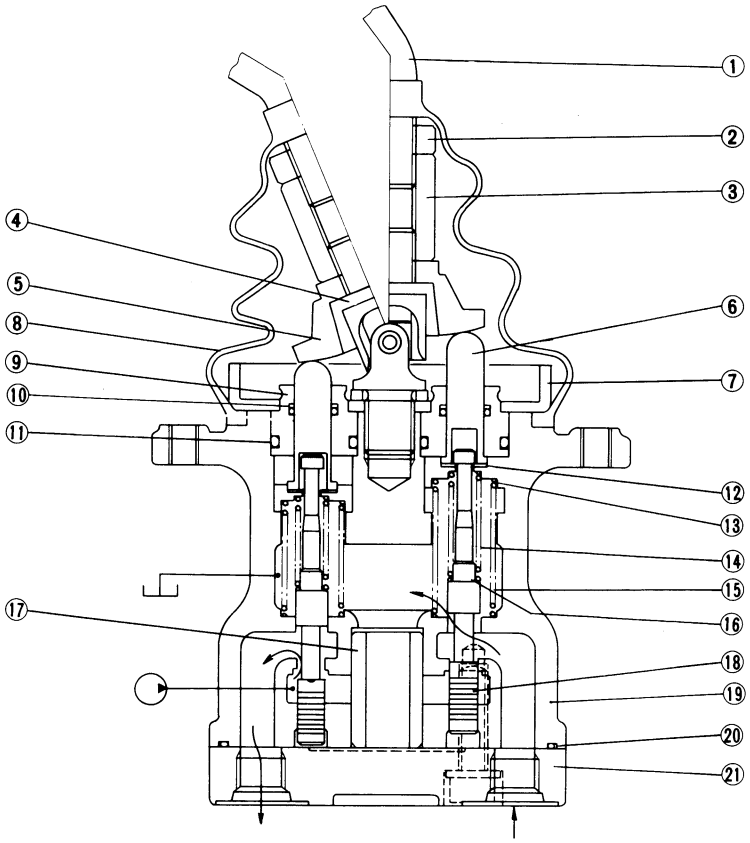

No.	Description
1	Lever
2	Lock nut
3	Adjusting nut
4	Joint
5	Disc plate
6	Push rod
7	Plate
8	Rubber cover
9	Plug
10	Seal
11	O ring
12	Washer 1
13	Spring seat
14	Spring
15	Spring
16	Washer 2
17	Bush
18	Spool
19	Casing
20	O ring
21	End plate

4) Operation

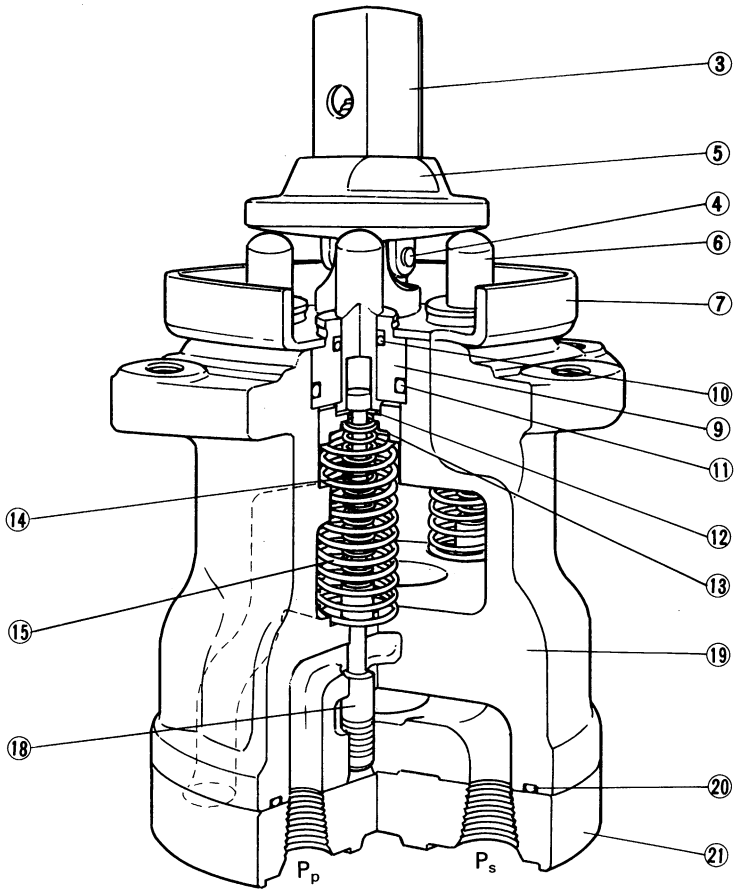

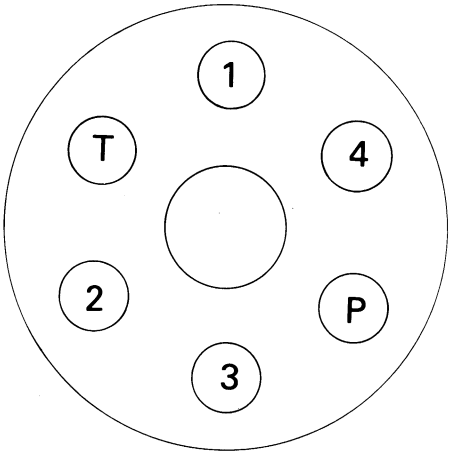

1. Function

The pilot valve controls the stroke and moving direction of the control valve spool. The control valve spool is spring—loaded at one end and the pilot valve's output pressure is applied to the other end to perform this control function.

By switching the hydraulic circuit, the spool ⑱ determines whether the hydraulic pressure supplied from the pump to the P port is transferred to the output ports (1, 2, 3 and 4) or the pressurized oil is sent from the output ports to the tank (T) port. The output pressure is determined by the spring ⑭ that is acting on the spool. The amount of compression of the spring is controlled by the sliding push rod ⑥ inserted in the plug ⑨ and displacement of the push rod is controlled by the handle via the disc ⑤ and adjusting nut ③. Supported by the joint ④ which works as a fulcrum, the handle can be tilted into any direction through 360°. The spring ⑮ acts on the casing ⑲ and spring seat ⑬ to return the push rod ⑥ to its zero offset position regardless of the output pressure, ensuring that the spool is returned to the neutral position. Reaction of the spring is appropriate for giving just an adequate feel to the operator when maneuvering.

2. Push rod stroke—pilot pressure

Relation between push rod stroke and pilot pressure is shown in the following chart.

Stroke		Pilot pressure		Lever angle when full stroke
S_B	S_C	P_B	P_C	
1.1 mm	7.0 mm	$6.5^{0}_{-1.5}$ kg/cm^2	17.5^{+2}_{0} kg/cm^2	19°
0.043 in	0.26 in	$92.5^{0}_{-18.7}$ psi	$249^{\pm 28.4}_{0}$ psi	

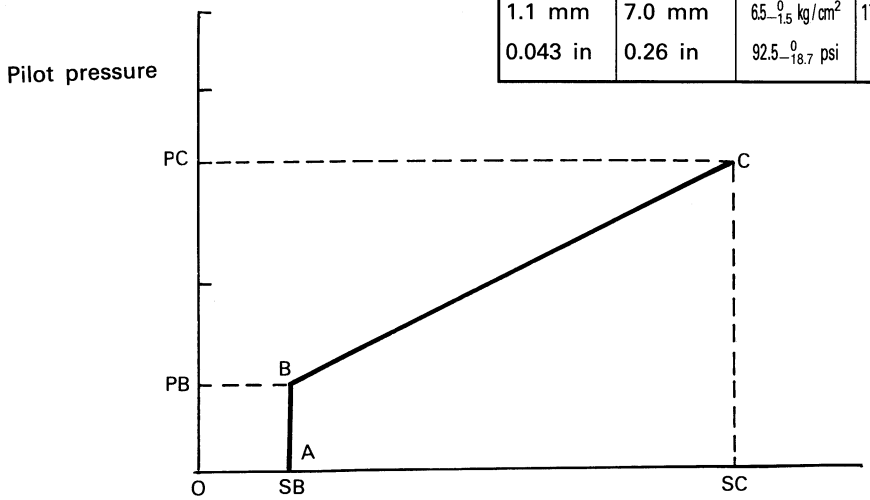

3. In neutral range (0—A)

When the lever is shifted into neutral position, the spool is pushed up by the return spring to block the port "IN" and to connect ports "OUT" to "T".
Consequently, the pressure at delivery port "OUT" becomes the same as that at the port "T".
Within the stroke "A" of the push rod the delivery pressure does not rise, keeping the same pressure as that of the tank.
The above neutral range is shown in Fig. by 0—A line.

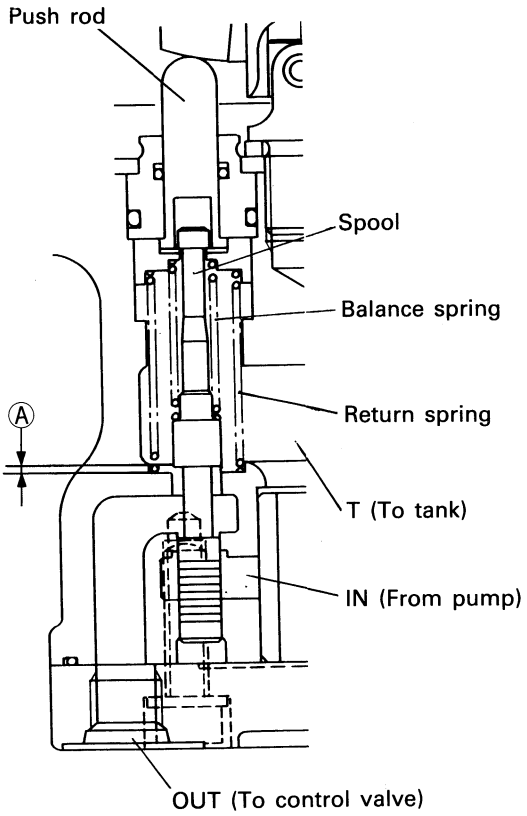

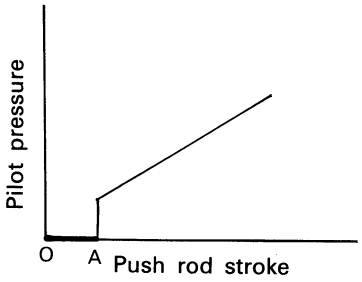

4. Pressure flashing point (A—B)

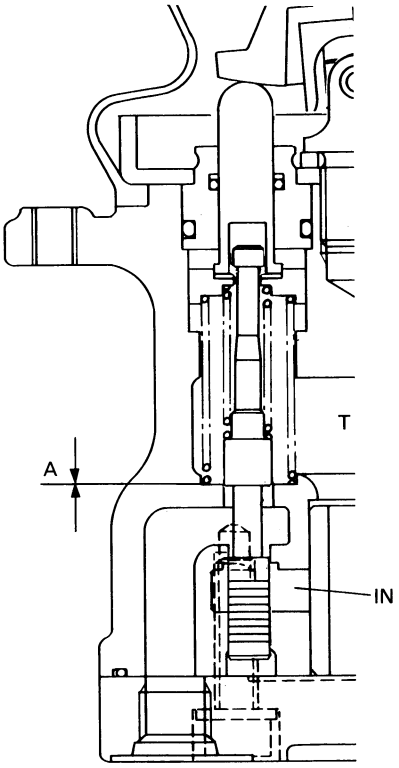

As the control lever is tilted from its neutral position, the push rod is inserted deeper in the function of the tilt angle of the disc plate compressing the return spring. Consequently, the spool is pushed down causing the spool notch gap "A" to approach zero. The balance spring surrounding the spool keeps the initially set status until the spool notch gap becomes zero.

When the spool notch gap becomes zero, both the output port (OUT) and the T port are closed. This causes the secondary pressure of the output port, which have been kept at the same pressure with the T port, to rise up to the level set by the balance spring. This process corresponds to the section A—B in the output diagram shown below.

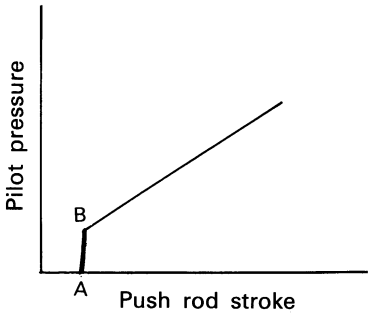

5. Control range (B—C)

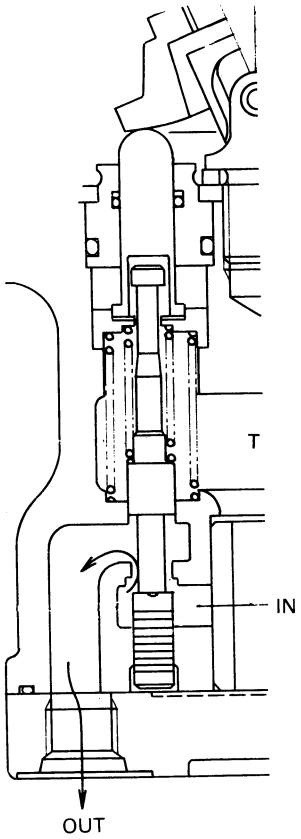

When the control lever is further tilted driving the push rod further down, the oil supplied from the pilot pump flows to the output port via the P port (IN) and output port (OUT) to produce a pressure. The acting force of the balance spring gradually increases with an increase of its deformation. As a result, the pressure at the output port increases to counterbalance the spring force.

When the output port pressure exceeds a preset level, the OUT and IN ports are closed. Subsequently, the OUT and T ports open. When the pressure falls below the preset level, the OUT and IN ports open. Finally, the OUT and T ports are closed so that the secondary pressure is kept constant.

The push rod is forced down until the spring seat comes into direct contact with the projecting part of the casing that determines the lower extreme of the lever stroke.

The above process corresponds to the section B—C in the output diagram shown below.

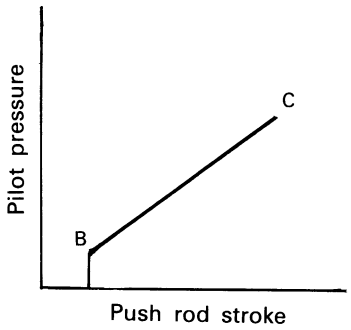

(3) Unload valve

1) Outline

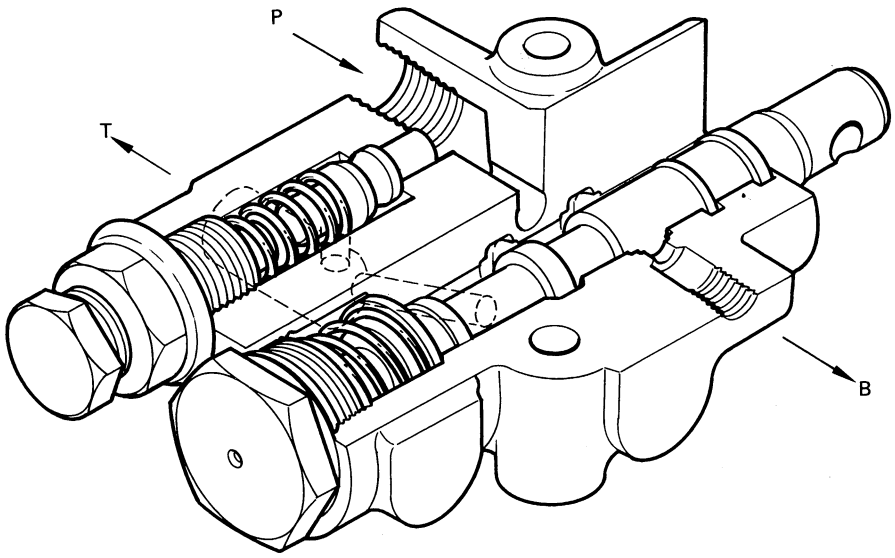

P : from pump
B : to pilot valve
T : to tank

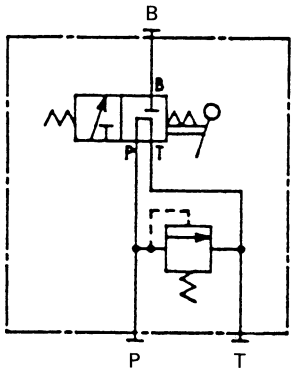

Code No.	68499-82222	
Maker	KUBOTA SEIKI	
Max. specified pressure	5.4 MPa (780 psi), 55 kgf/cm^2	
Rerief valve setting pressure	at 0.4 ℓ/min (0.5 GPM)	$1.96^{+0.4}_{0}$ MPa (285^{+60}_{0}psi), 20^{+4}_{0} kgf/cm^2
	at 6.6 ℓ/min (1.7 GPM)	< 3.9 MPa (570 psi), 40 kgf /cm^2
Max. flow rate	6.6 ℓ /min (1.7 GPM)	
Leaking oil volume from B port	30 cc /min (0.08 GPM) or less	
(condition)	pressure : 15 kgf/cm^2 Oil temp : 50 ±10℃	
Stroke	3 mm	
Return spring	Initial setting : 10.1 kgf When reliefing : 14.2 kgf	
Tightening torque	PT 1/4 (P, T port) : 200 kgf·cm PT 1/8 (B port) : 110 kgf·cm M6-bolt : 70 kgf·cm	

The unload valve, coupled with the left—hand lever stand by a mechanical link, switches on and off the flow of oil fed from the pilot pump to the pilot valve. The relief valve incorporated in the unload valve limits the maximum primary pressure of the pilot circuit.

In the symbol mark diagram shown below, the unload valve's spool is in the unload position. In this condition the whole quantity of oil entering from the P port returns to the tank through the spool.

When the lever stand is tilted forward, the spool position changes as shown in the figure at left and the oil from P port is supplied to the pilot valve through the B port. Should the pressure in the pilot line increases beyond the preset relief pressure, the relief valve will open to prevent damage to the pilot line by relieving high pressure oil into the tank.

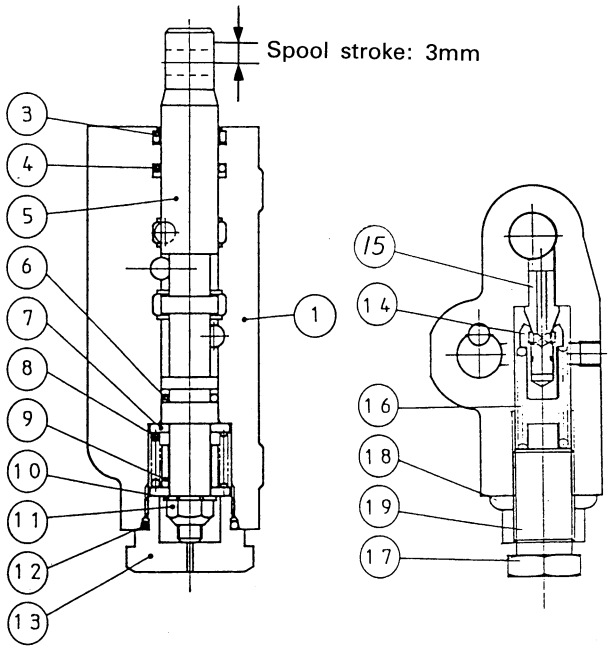

①Valve body
②M6 plug
③Scraper
④O-ring
⑤Spool
⑥O-ring
⑦Washer
⑧Return spring
⑨Collar
⑩Plain washer
⑪Plain washer
⑫O-ring
⑬Plug
⑭Relief poppet
⑮Relief seat
⑯Relief spring
⑰Adjusting screw
⑱Seal washer
⑲Nut

- **Unload valve**

Q-P characteristics (relief override)

Conditions 1) Oil used: Gear oil M80B
2) Oil temperature: 50±5℃
3) Pump pressure: 100 kgf / cm^2

Unload valve: P-Q performance

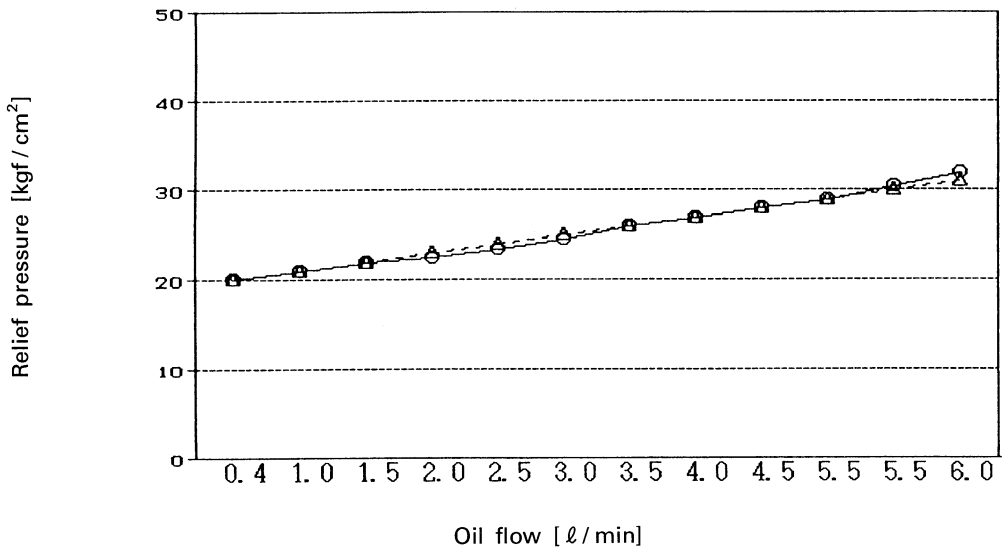

Model		KX41	KX61	KX71	KX101	KX151
P_4 flow rate [ℓ / min]	Idle	1.42	1.42	1.42	1.69	1.69
	Max.	3.10	3.87	3.36	3.76	4.30

2. Spring specifications

	Wire dia.	Outer dia.	Total No. of coils	Free length	Setting length	Setting load	Spring constant
Relief spring	φ1.8	φ 8.5	16	38	31.8	15.45	2.49
Return spring	φ2.0	φ18.8	4.5	20.5	13	10.12	1.35

(4) Switching valve

1. Structure

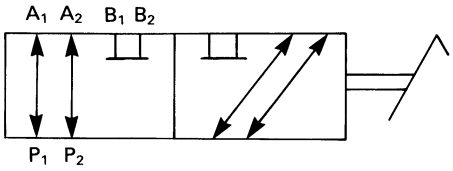

The switching valve is a sliding spool type that switches between swivel and swing operations.
The P1 and P2 ports are connected to the pilot valve, the A1 and A2 ports to the swivel motion control valve, and the B1 and B2 ports to the swing motion control valve.
By means of the switching valve, oil from the pilot valve is sent to the swivel or swing motion control valve so that both operations can be controlled by a single lever.
Spool stroke: mm

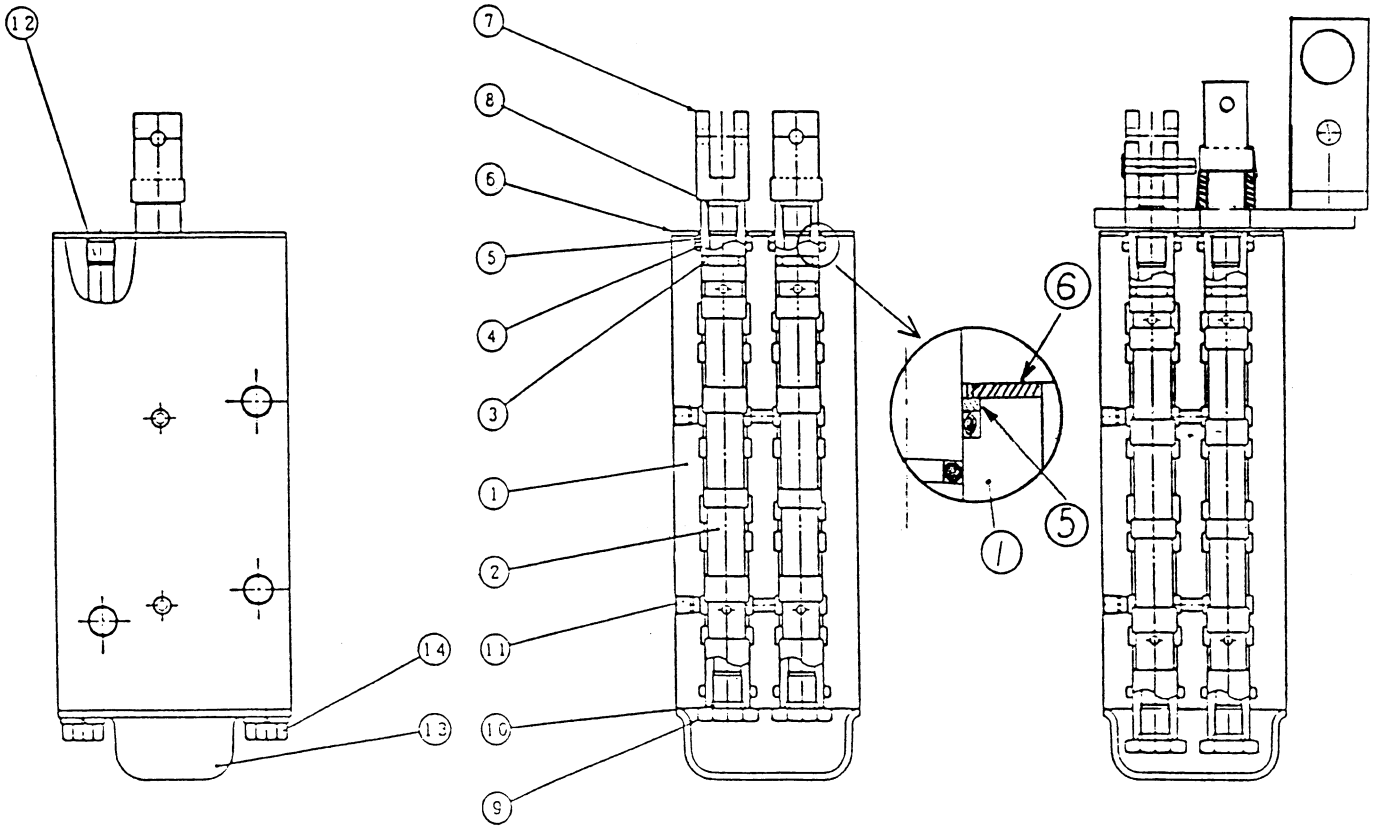

①Change valve body
②Spool
③O-ring
④O-ring
⑤Back-up ring
⑥Plate
⑦Rod
⑧O-ring
⑨Plug 1
⑩O-ring
⑪Plug 2
⑫Plug
⑬Cover
⑭Bolt

2. Swivel-swing change valve
A: Swivel-swing change spool
B: Arm-swivel/swing change spool
When swivel-swing change pedal is depressed to right, spool A is pulled up and pilot control pressuer applies to swing sections of main control valve.
——→ indicates to swing function
- - - - → swivel function

Note: For overseas model, spool B is fixed in pulling condition by inserting the spacer.
This change value is for European version.

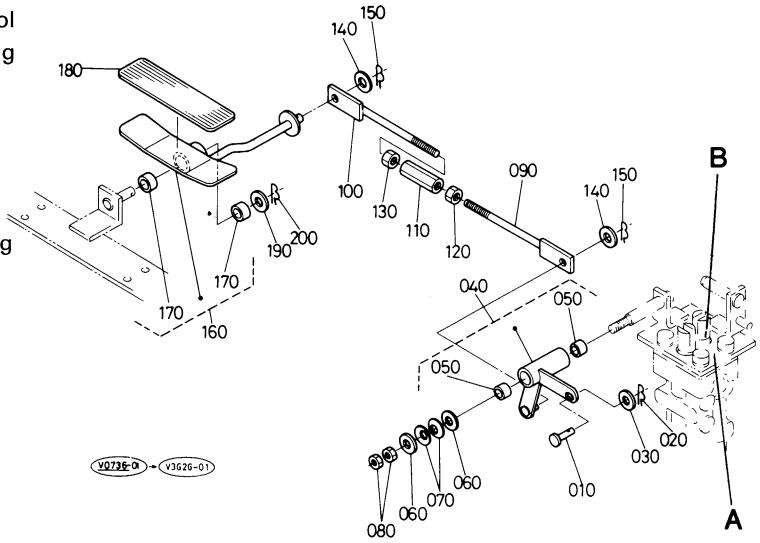

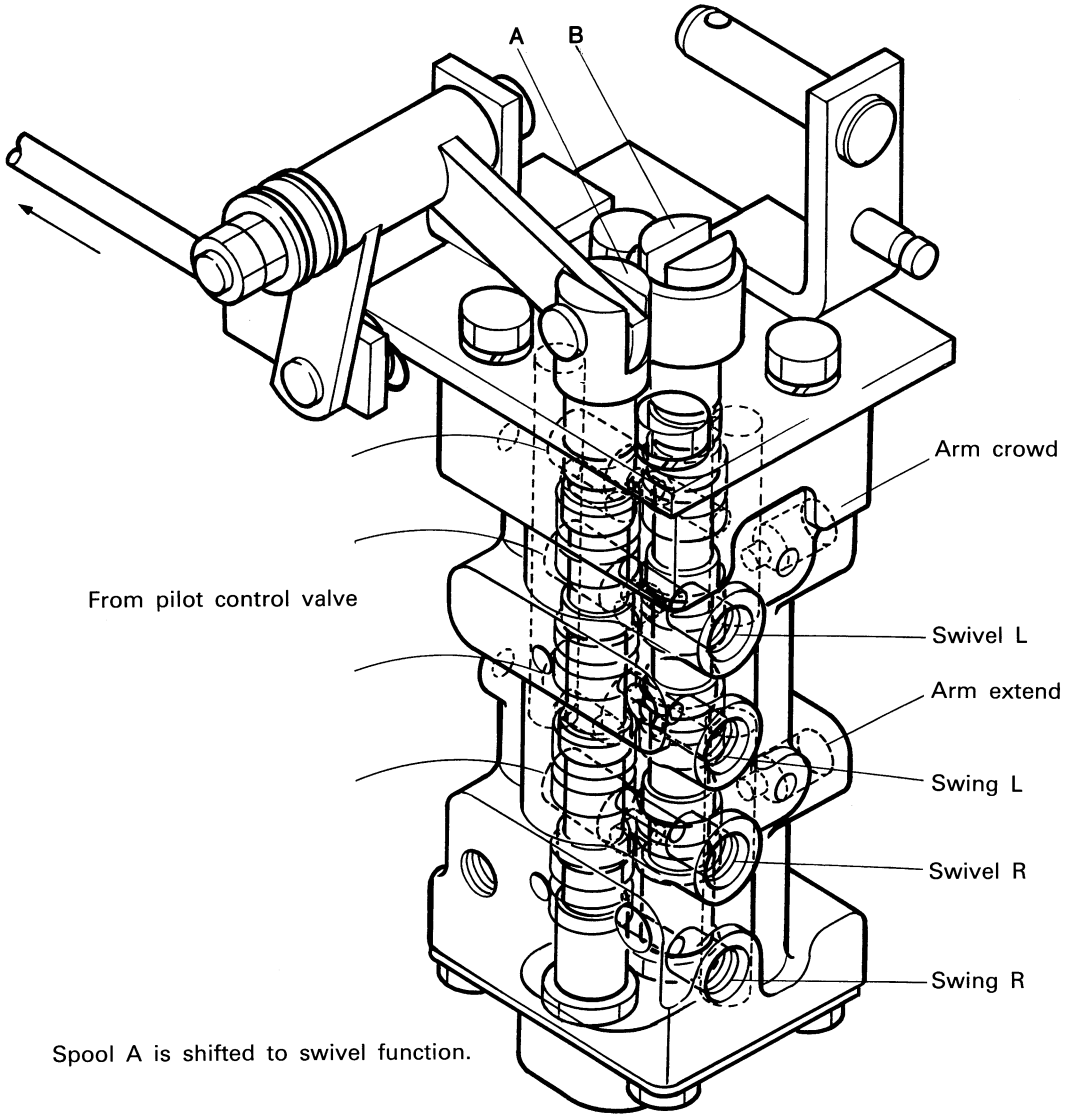

Spool A is shifted to swivel function.

(4) Operating pattern of Pattern change valve

①Swing
②Swivel
A PATTERN A...J. D
B PATTERN B...SAE

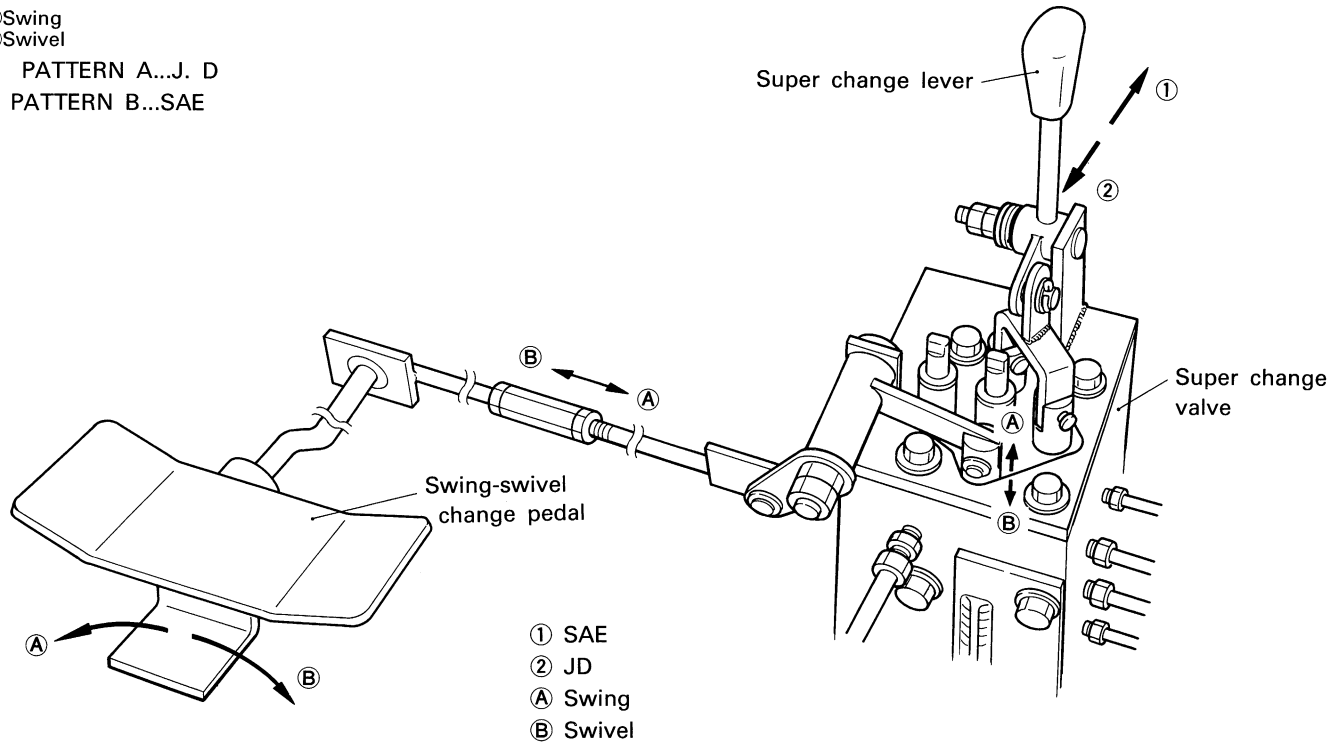

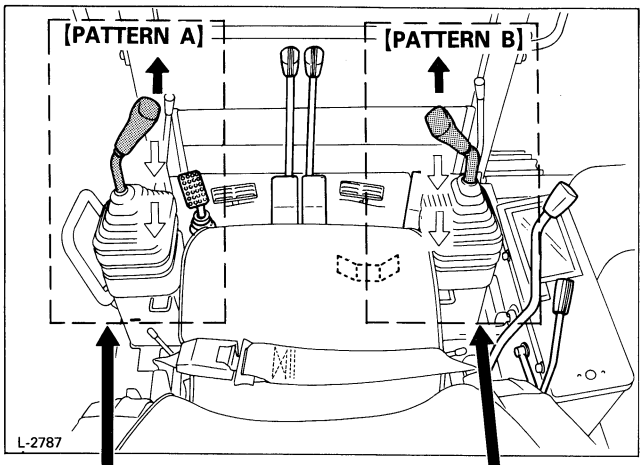

⇩	SAE Boom Up
	J.D Arm Down
⬆	SAE Boom Down
	J,D Arm Up

⬆	SAE Arm Up
	J.D Boom Down
⇩	SAE Arm Down
	J.D Boom Up

○ Parts designation

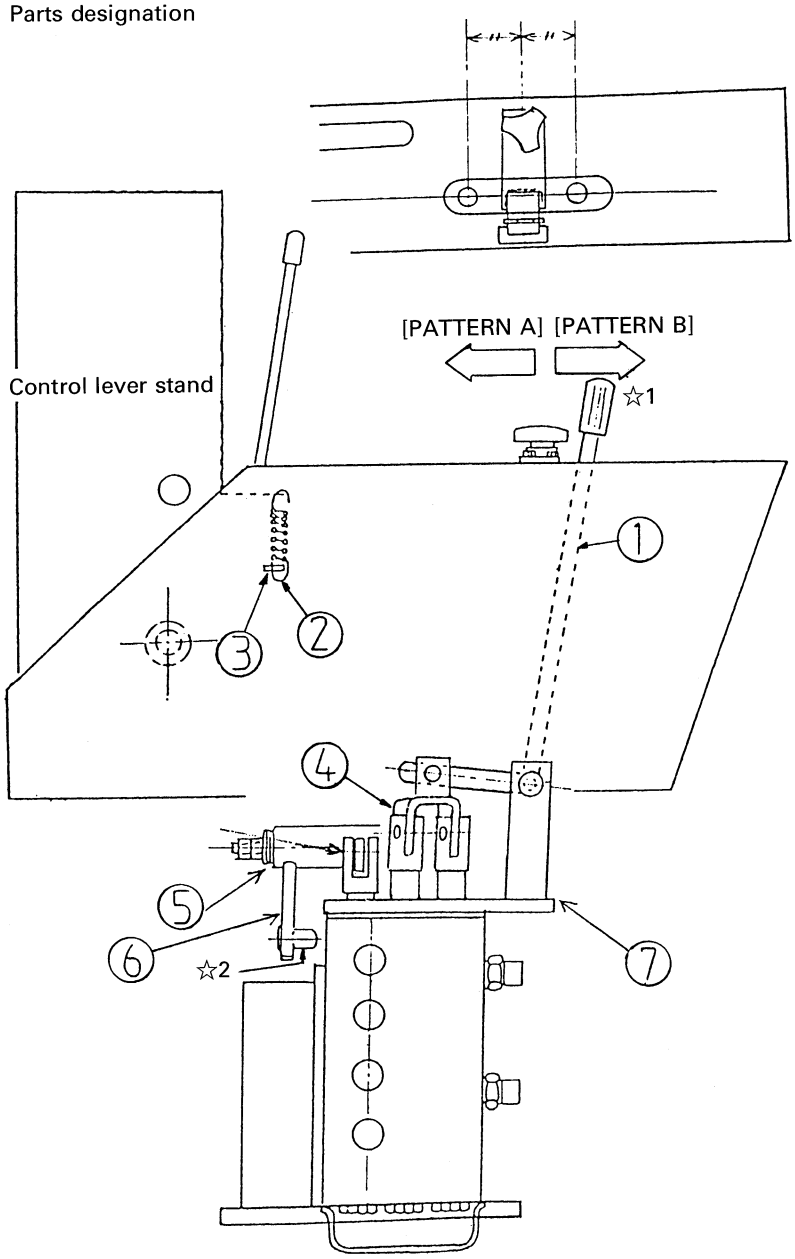

Pattern change valve

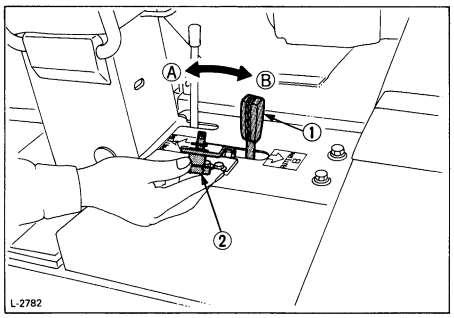

① *Pattern selector lever*
② *Lever lock*
Ⓐ *PATTERN A*
Ⓑ *PATTERN B*

Lever operating force

Pattern select lever (at the point of ☆1)	6.6~11.0 lb 3.0~5.0 kg
Swivel / Swing change pedal (at the point of ☆2)	4.4~6.6 lb 2.0~3.0 kg

1	Lever assy	68658-65201
2	Spring	68311-96170
3	Stopper	68311-44330
4	Link	68658-65121
5	Plate spring	
6	Lever assy (3)	68311-96902
7	Bracket	68658-65211

Oil flow of pilot system

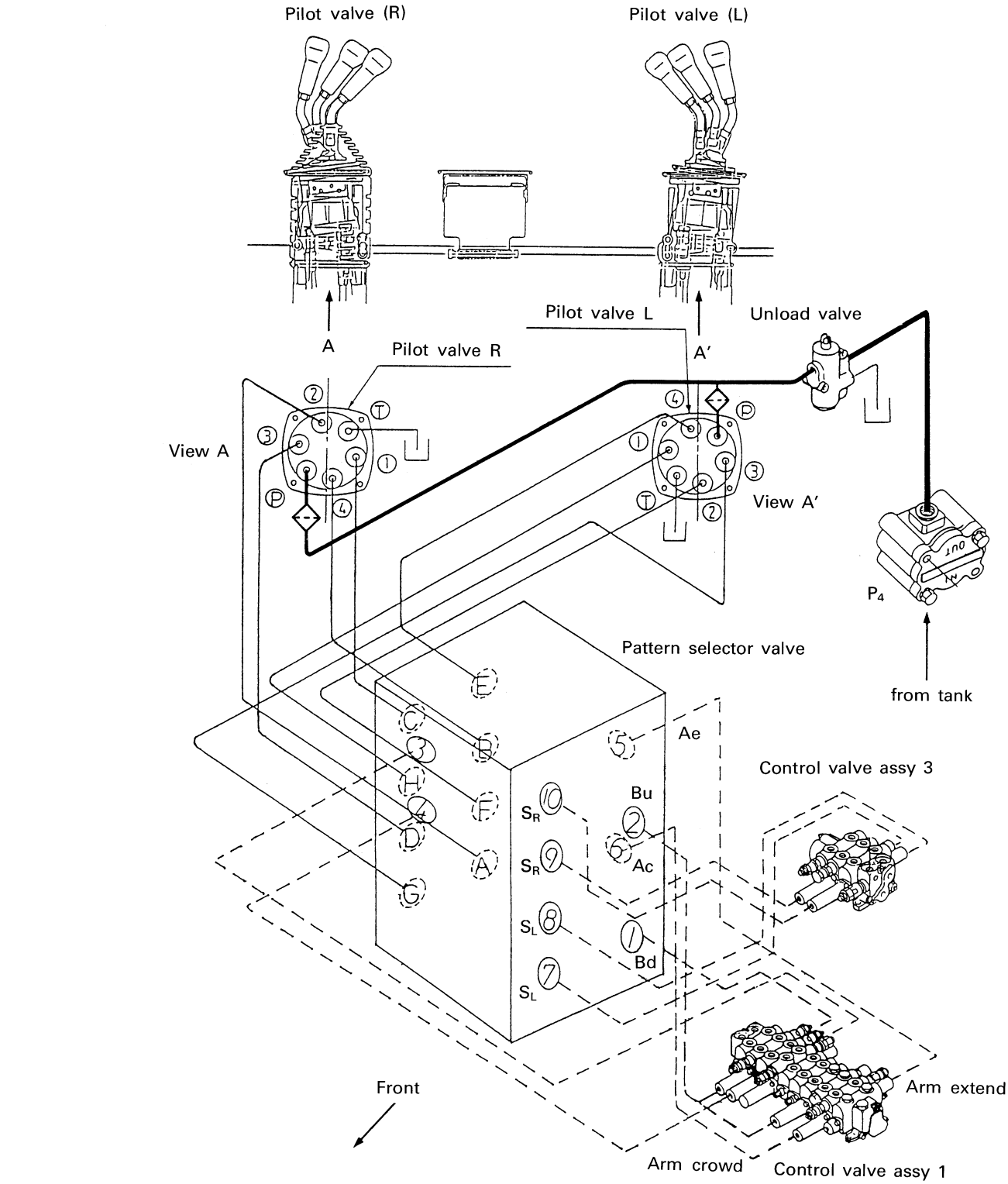

Model: KX101

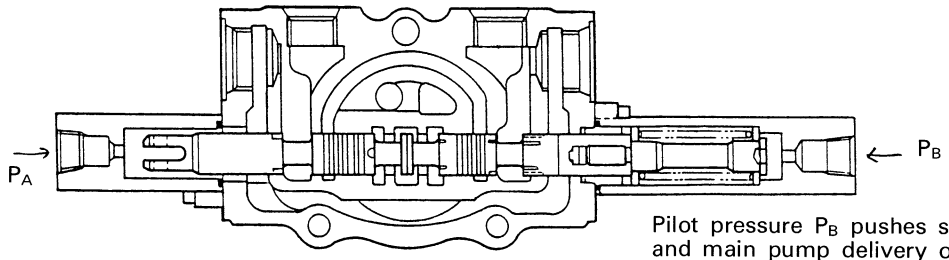

Pilot pressure P_B pushes spool and main pump delivery oil flows out from B port. And vice versa.

Oil flow

①Boom up, arm extend & swivel R at A pattem(JD)

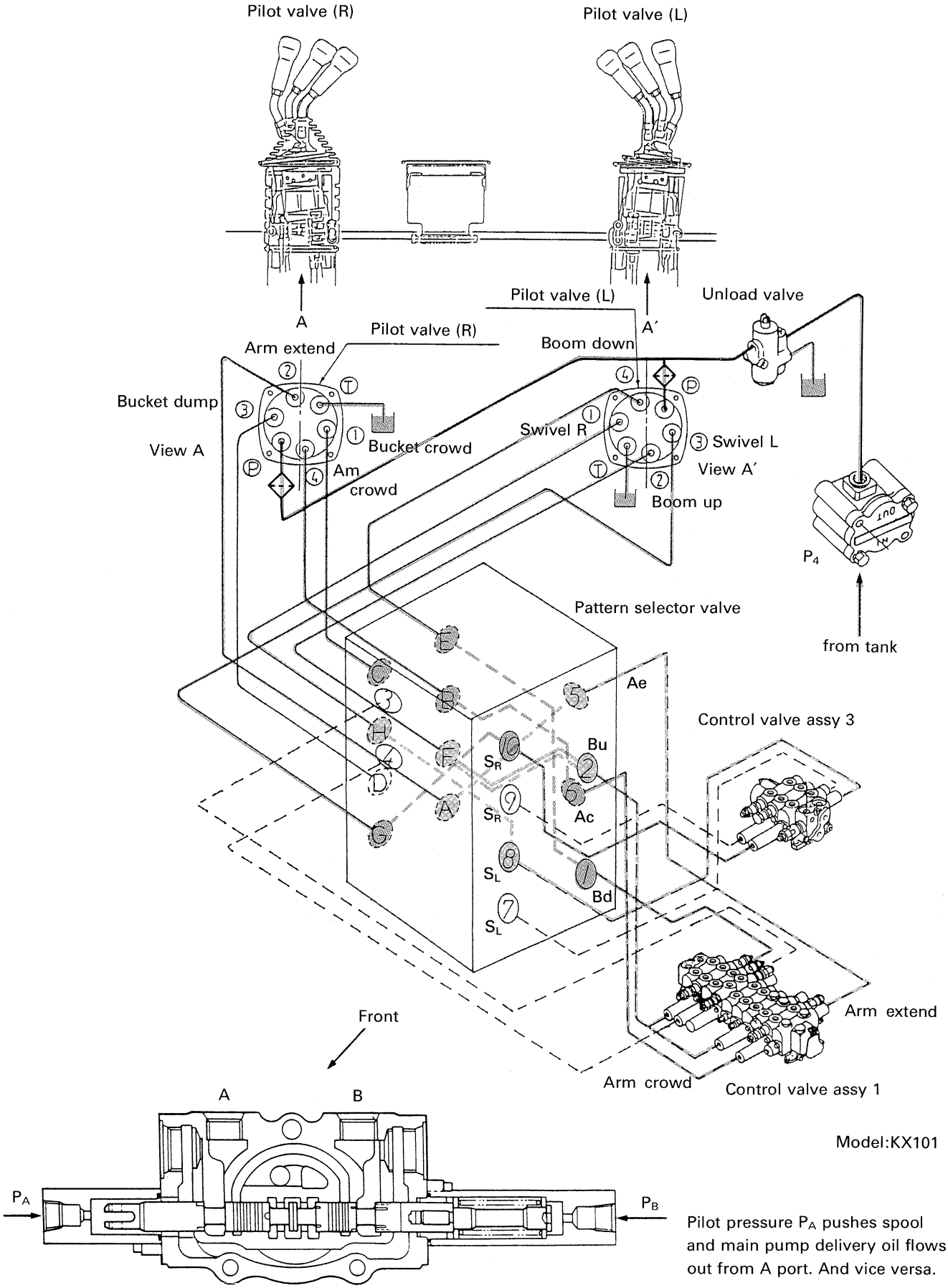

Model:KX101

Pilot pressure P_A pushes spool and main pump delivery oil flows out from A port. And vice versa.

Oil flow

②Boom down, arm crowd & swing L at B pattem(SAE)

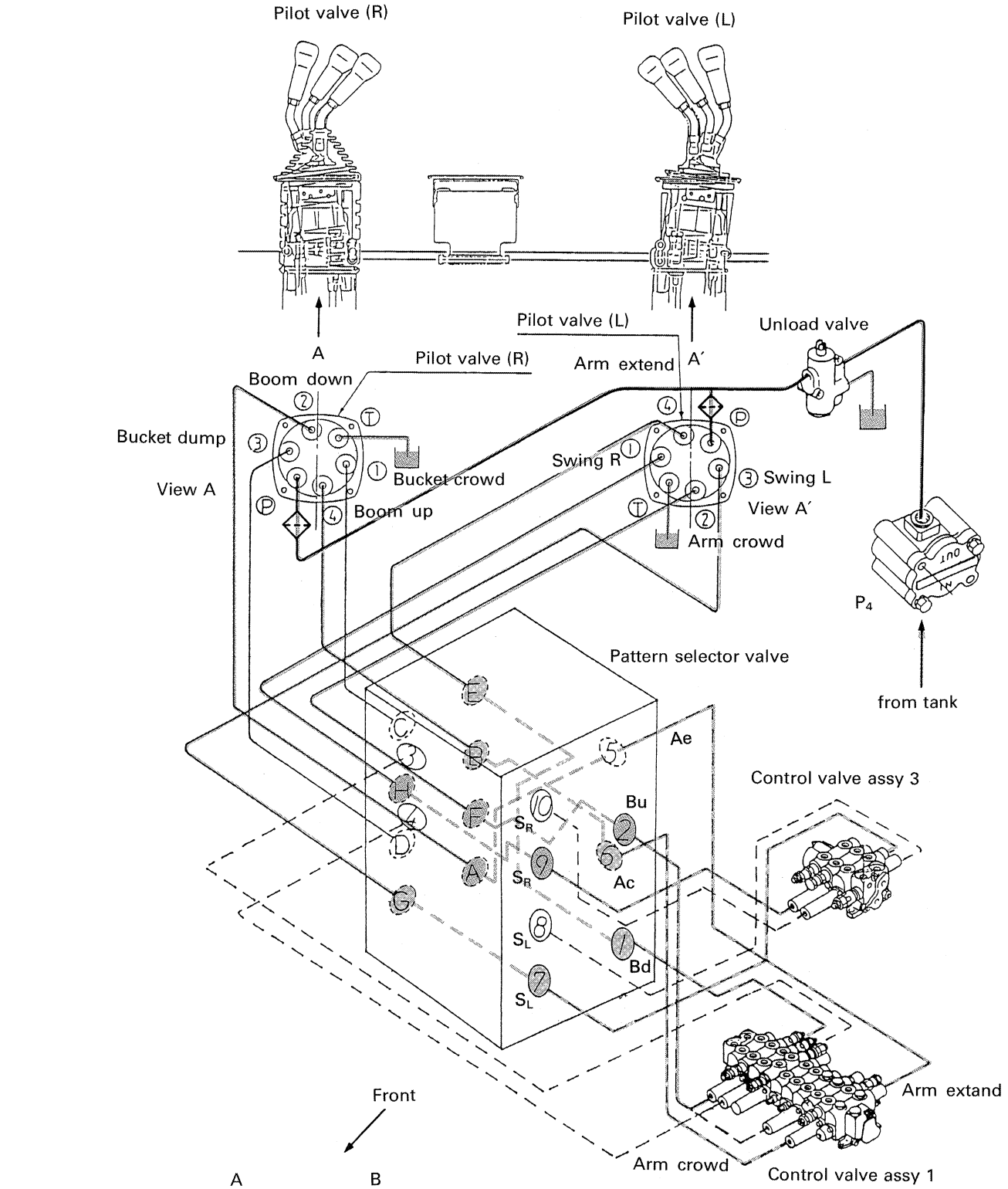

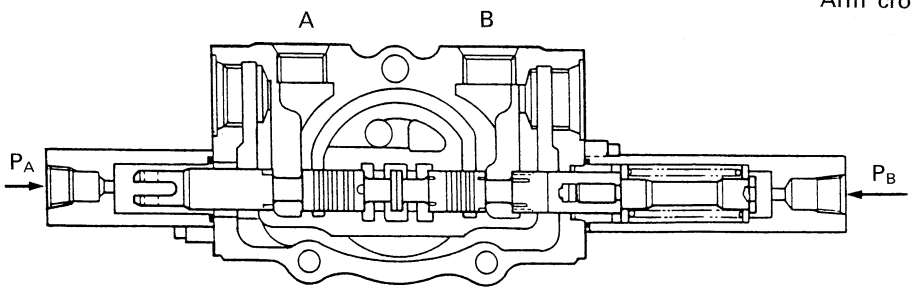

Model:KX101

Pilot pressure P_A pushes spool and main pump delivery oil flows out from A port. And vice versa.

[4] Control valve

(1) Outline

1. Control valve is made by Kayaba Industry Co. and two types are used in KX series.
   KVS65- ····· KX61～151
   KVS31- ····· KX36, 41
2. Control valve assy is separated into two, control valve (1) assy which controls pump 1 for boom, bucket and travel R and pump 2 for travel L, boom combine, arm and service port and control valve (3) assy which controls pump 3 for swivel, swing and dozer.
3. Structural differences are shown as in the table.

Model	KX36	KX41 ※3	KX61	KX71 ※1,2	KX101	KX151
Over load relief valve type (Boom, arm, bucket, dozer)	Direct type		Pilot type with anti-cavitation			
Control valve type	KVS31		KVS65			
Control system ※1	Wire & Link		Hydraulic remote control & Link			
Pump Number	P_1+P_2	$P_1+P_2+P_3$	$P_1+P_2+P_3$, P_4			
Main relief valve type (a_1, a_2, a_3, a_4)	Pilot type					
Power-up relief valve	No	Yes				
Main relief valves	a_1, a_2 main relief valve	a_1: Pump 1 & 2 main relief valve (Low) a_2: (High) a_3: Pump 3 main relief valve				
Low pressure relief valve (a_4)	No					Yes 140kgf/cm^2
Service port confluence	P_1+P_2		P_1+P_2	P_1+P_2	P_1+P_2	
Arm port cofluence	P_2	P_2	P_2	P_2	P_1+P_2	
Travel speed change valve ※2	No(one speed)		Two speed Hi-Lo change valve			
Boom port confluence	One speed		Two speed confluence valve			
Overload relief, Dozer, bottom	No		Yes			
Spacer section	No	Yes	No	No	Yes	Yes

※1 KTC・KCL・KTA: KX41, 71 — Wire & link
※2 KTC・KCL・KTA: KX41, 71 — One speed stage travel motor
※3 KBM, Europe: KX41 — Hydraulic remote control

Control valve Return spring force:

Machine model	KX36 (M)	KX41 (M)	KX41 (P)	KX61, 71, 101, 151 (P)	KX71 (M) ※1,2
Type of valve	KVS-31	KVS-31	KV-31	KVS-65	KVS-65
Spool stroke	±6	±6	±6	±7.2	±6 (Swing-swivel) ±7.2 (Others)
Spool dia.	φ12	φ12	φ12	φ14.2	←
Spring force					
Travel	10～15.2	10～15.2	7.0～8.7	9.8～13.0	9.8～13.0
Dozer	7.0～8.7	8.0～11.0	8.0～11.0	9.8～13.0	7.2～9.0
Swivel	9.7～12.5	9.8～12.5	Pilot control	Pilot control	7.2～8.7
Swing	7.0～8.7	7.0～8.7	Pilot control	Pilot control	7.2～8.7
Service port	7.0～8.7	7.0～8.7	7.0～8.7	7.2～9.0	7.2～9.0
Hi-Lo change	——	——	——	8.2～11.2	——
Others	7.0～8.7	7.0～8.7	Pilot control	Pilot control	7.2～9.0

Main control valve section & Air breathing passage

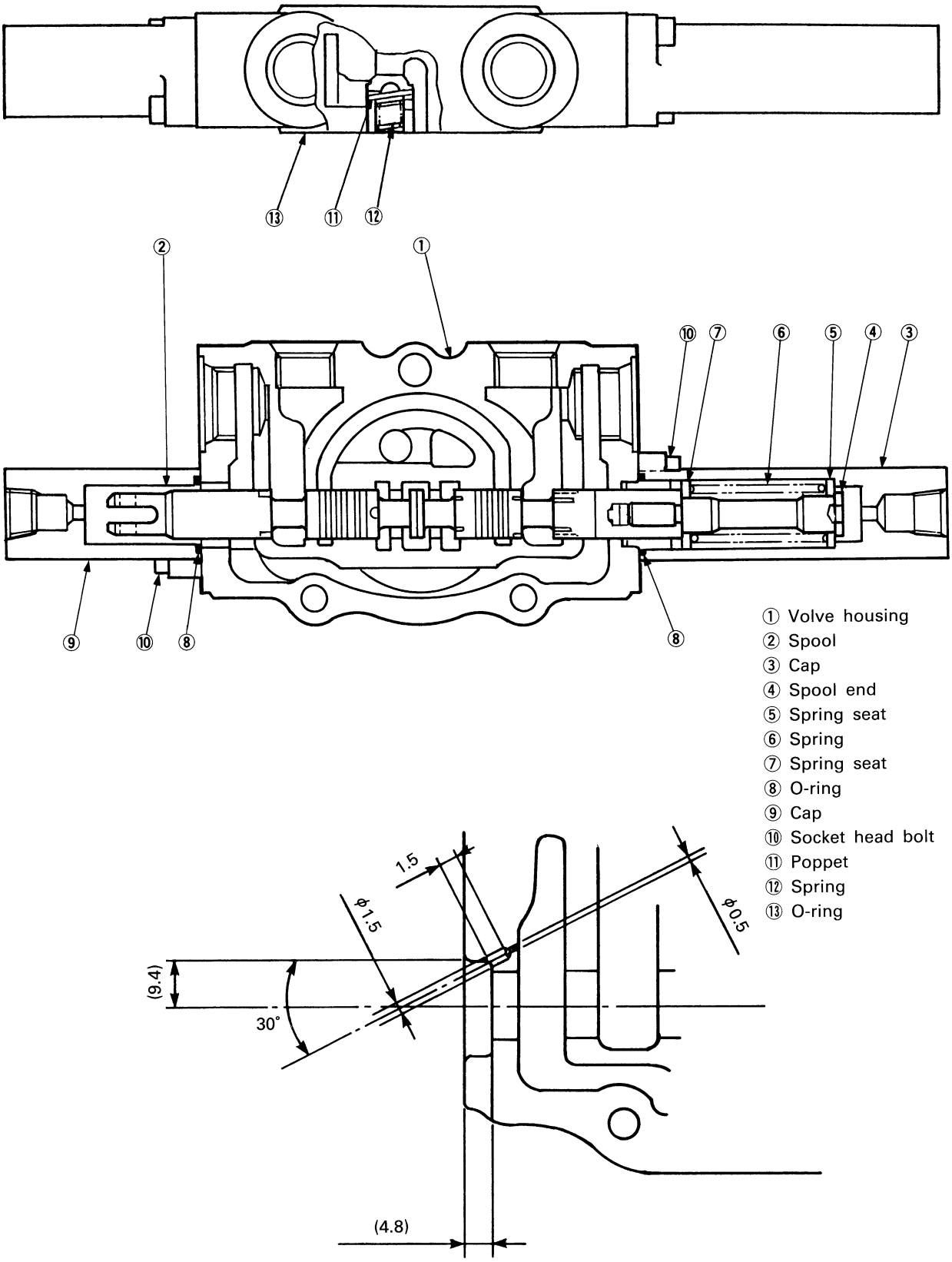

① Volve housing
② Spool
③ Cap
④ Spool end
⑤ Spring seat
⑥ Spring
⑦ Spring seat
⑧ O-ring
⑨ Cap
⑩ Socket head bolt
⑪ Poppet
⑫ Spring
⑬ O-ring

ϕ0.5 orifice: Approx 0.5l/min at 17kgf/cm^2

● **Main control valve**

Pilot Section: Stroke vs Pressure Curve

(a) Boom confluence (b) Swing, swivel (c) Other sections

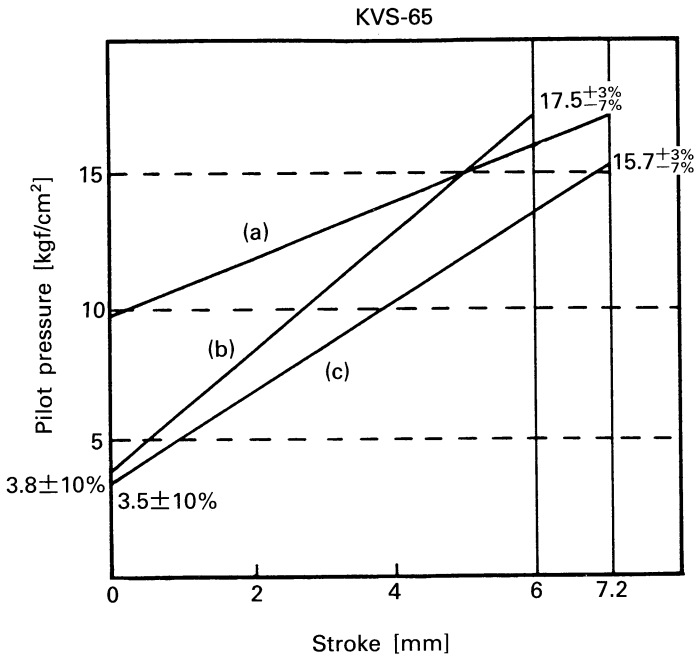

(1) Boom sections (2) Others

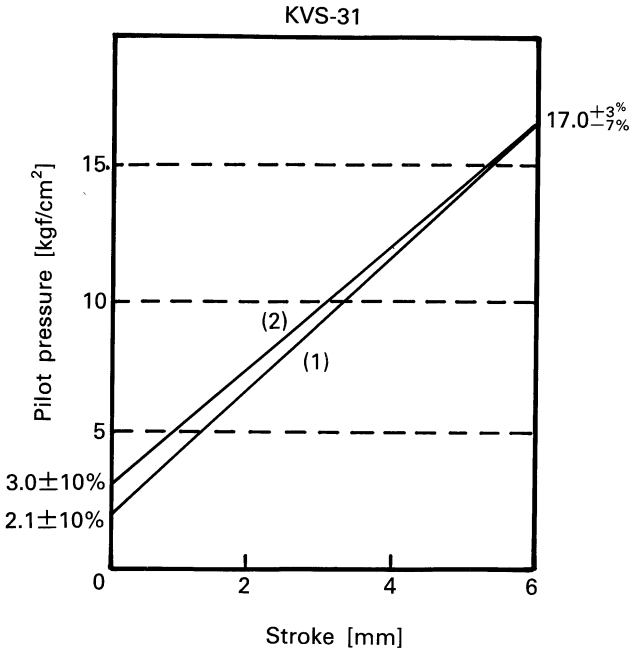

(2) Structure & function of power-up valve section

1. Structure of power-up valve

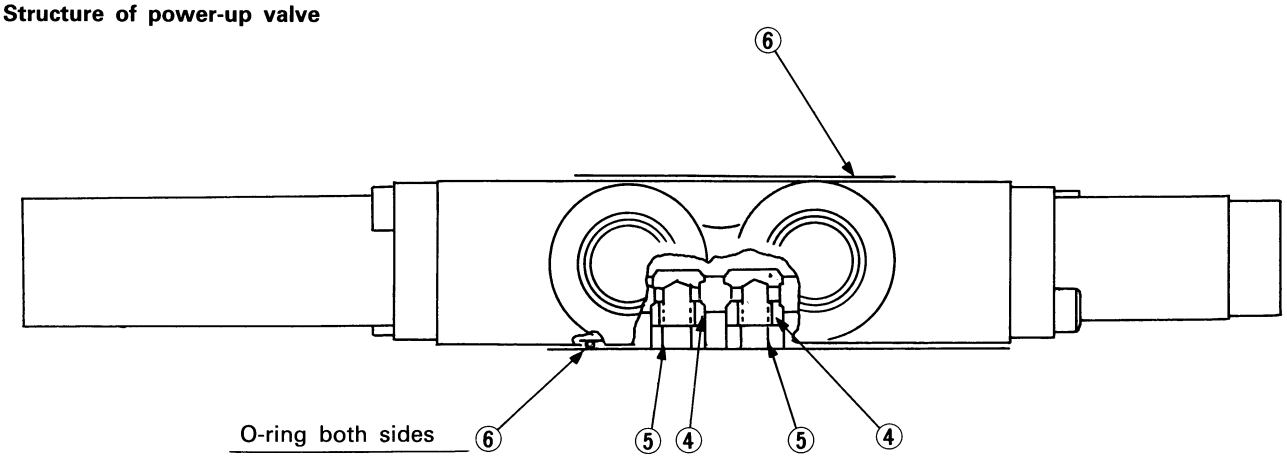

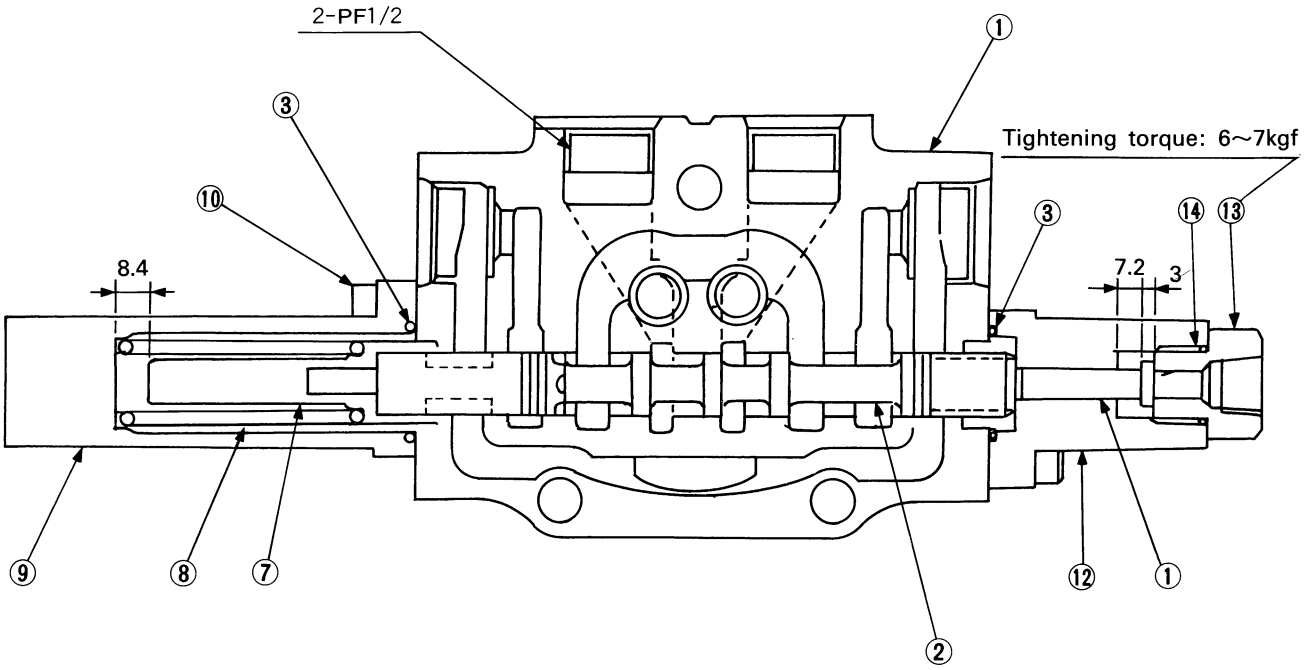

1	Valve housing	1
2	Spool	1
3	O-ring	2
4	Check valve poppet	2
5	Check valve spring	2
6	O-ring	2
7	Spring seat	1
8	Spring	1
9	Cap	1
10	Socket head bolt	4
11	Piston	1
12	Cap	1
13	Plug	1
14	O-ring	1

2. High pressure relief valve function

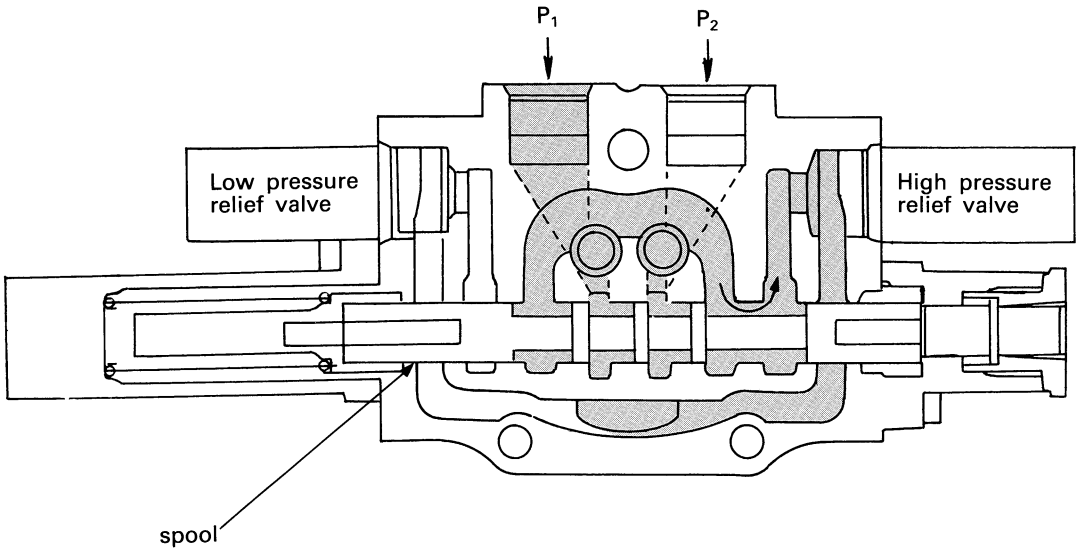

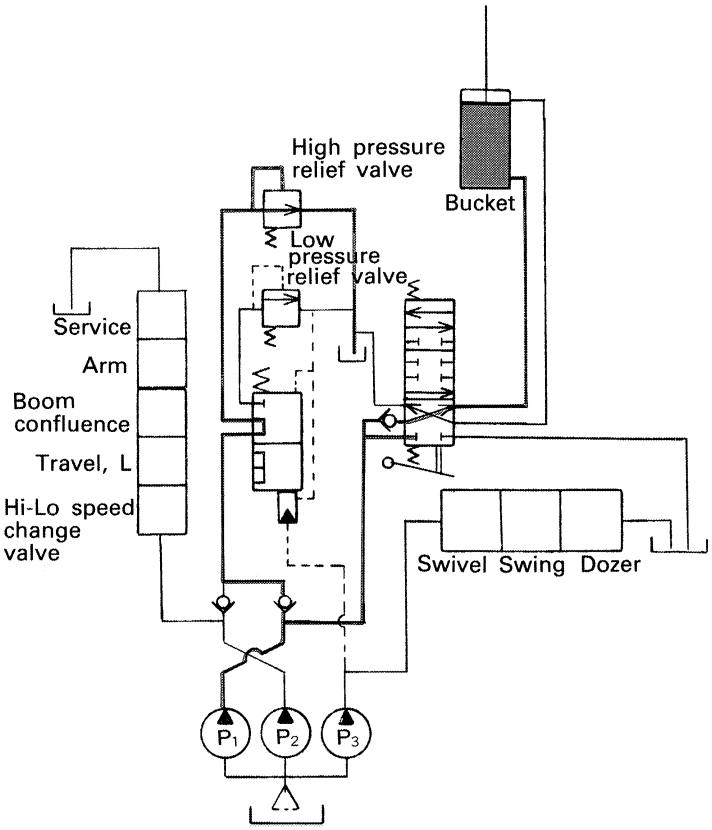

① In time of operation of only the P_1 or P_2 pump line, the spool of the booster valve is positioned as shown in the above figure. (A low-pressure passage is in the stopped state.)

② As the control valve of P_1 circuit line (cf. bucket) is changed over, pressurized oil is sent to the cylinder to operate it.

③ As a load is applied to the cylinder and the set pressure of the high-pressure relief valve is reached, this relief valve operates, and relieved oil is returned to the oil tank.

④ In time of operation of the P_2 pump line, too, flow of oil is the same as in the case of the P_1 pump line in operation.

3. Low pressure relief valve function

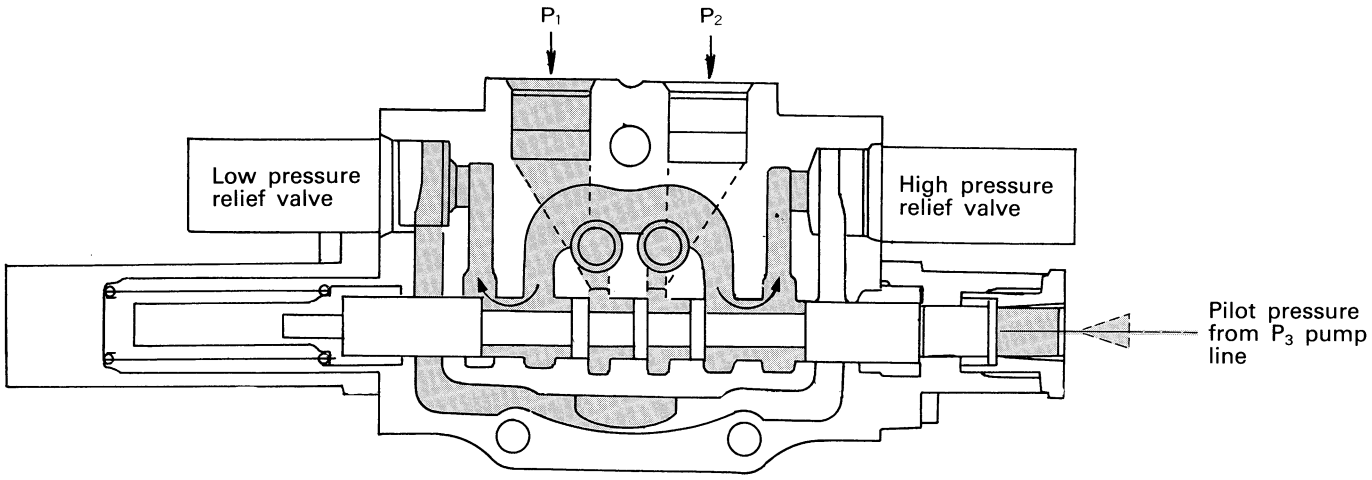

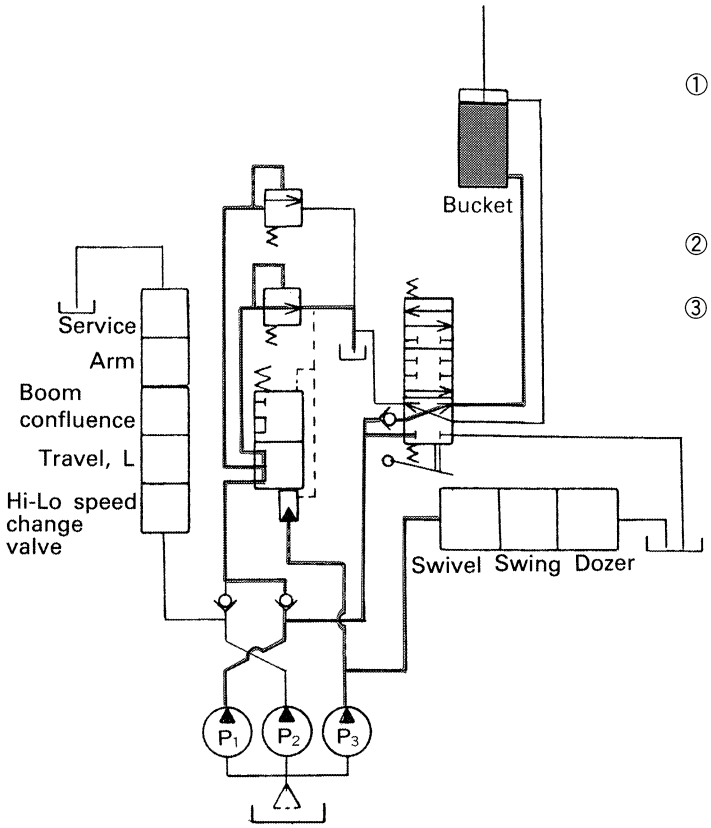

① As actuators (for swivel, swing and dozer) of the P_3 pump line are operated, a pressure (of about 60 kgf/cm^2) is generated in a line from P_3 pump to the power-up valve, and a spool of the power-up valve is pushed to the left to open the low-pressure and highpressure passages.

② As the control valve of P_1 circuit line (cf. bucket) is changed over, pressurized oil is sent to the cylinder to operate it.

③ As a load is applied to the cylinder and the set pressure of the lower-pressure relief valve is reached, this relief valve operates, and relieved oil is returned to the oil tank.

KX41

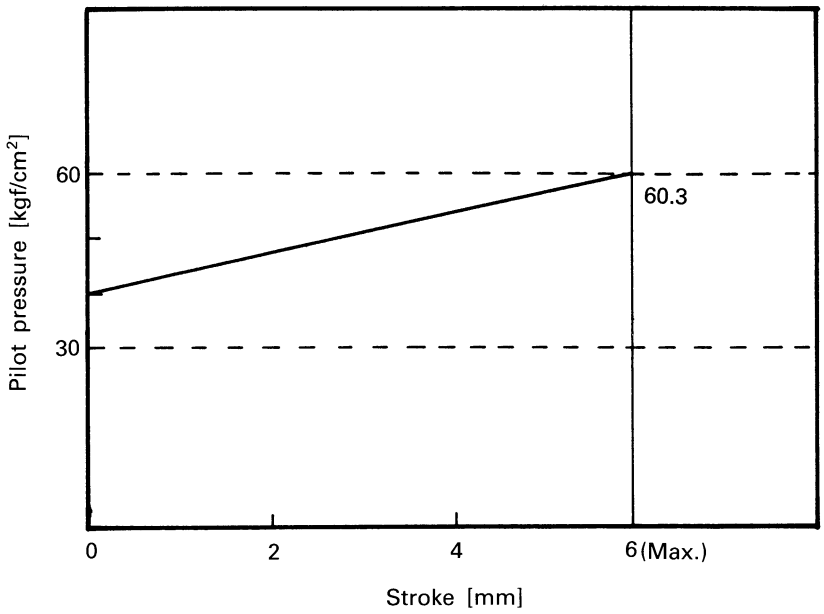

KX61, 71, 101, 151

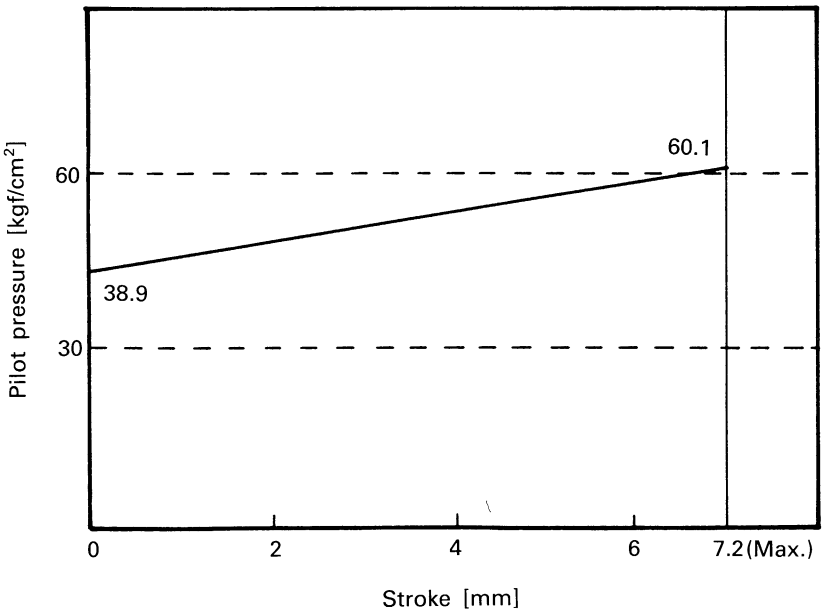

(3) Travel speed change valve
(Sample: KX101)

(Low speed)

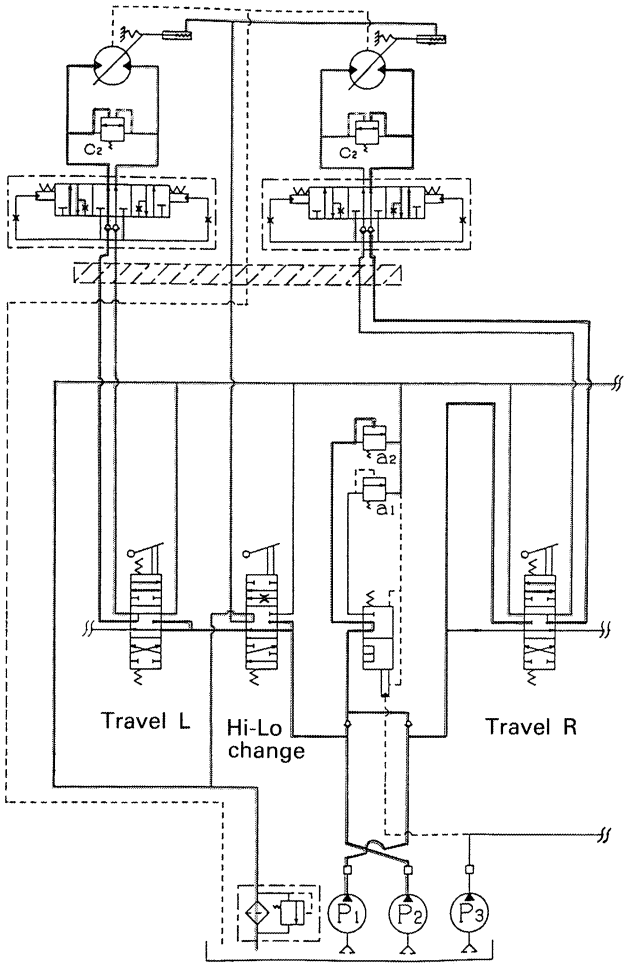

(High speed)

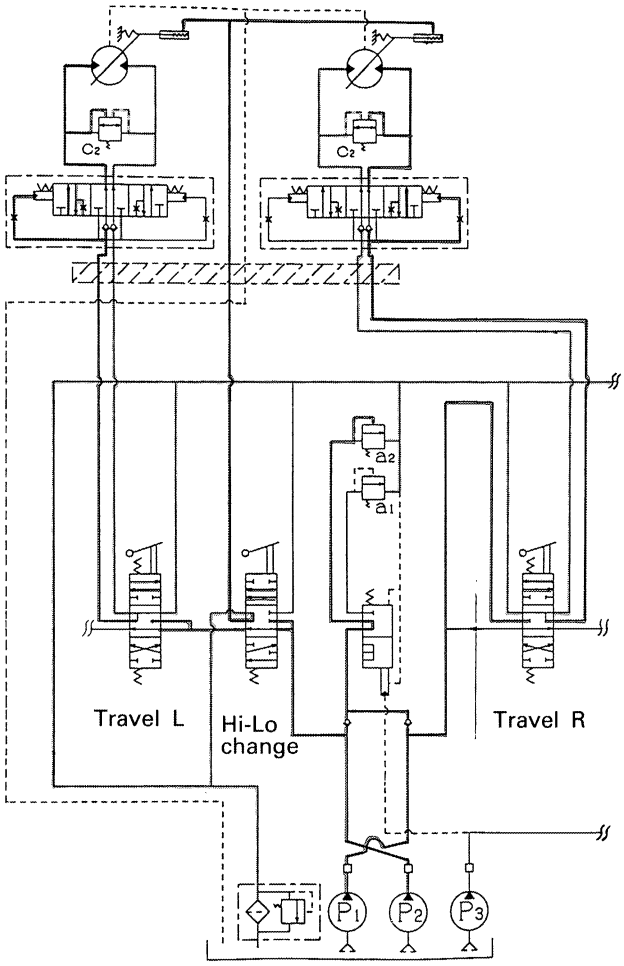

When depressing the travel pedal, high-low speed change spool is shifted as shown in fig.
Pressurized oil from pump 2 is delivered to Hi-Lo piston of wheel motor valve through this valve.
Then swash plate is shifted to hi-speed position.
Min. operating pressure of Hi-Lo piston is 4 kgf/cm^2.

[5] Swivel motor

(1) Outline

1. KX36, 41, 61 use orbitrol type and KX71, 101 and 151 use axial piston type.
2. Counterbalance valve spool isn't incorporated in either type of swivel motor.
   Outer view of axial piston motor looks same as KH series but counterbalance spool isn't incorporated. This enables the smooth start and stop of machine upper frame.
   And swivel speed can be easily regulated by the lever stroke, in other words, pump delivery rate by the control valve spool.
3. Max. swivel force is controlled by relief valve C_1 or main relief valve pressure (KX101, 151).

(KX36, 41, 61)

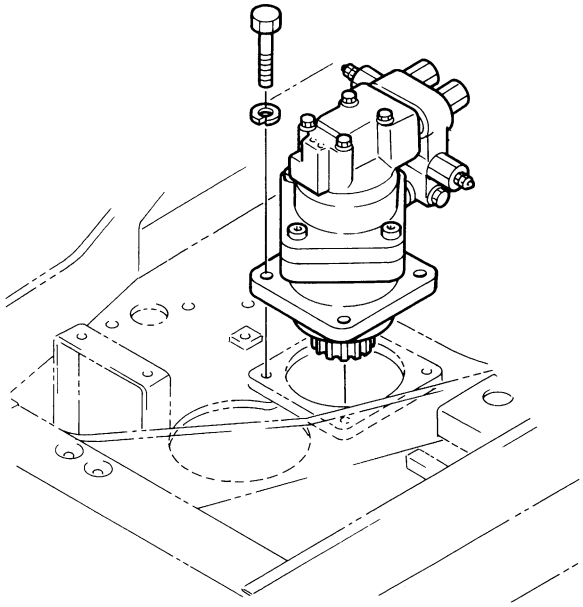

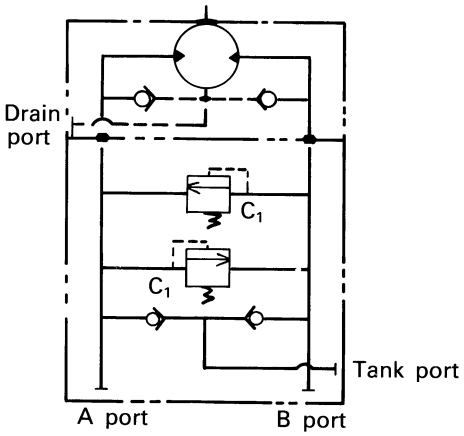

(KX71, 101, 151)

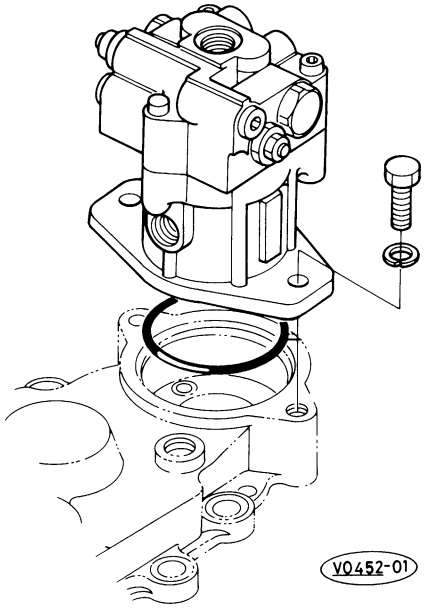

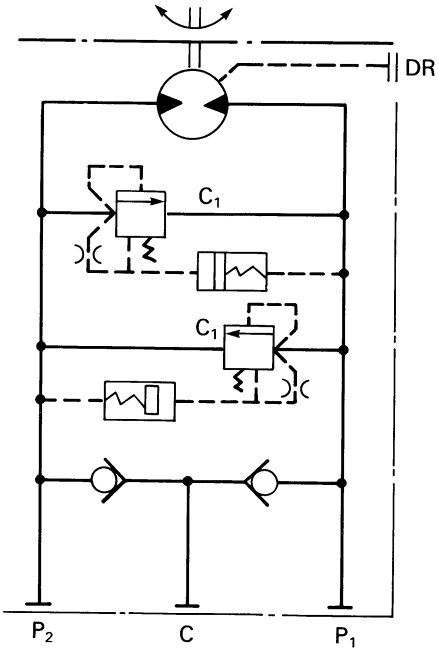

4. The shape of the rotary control valve spool has been devised (meter-out function orifice and inching notch have been processed anew) to fully secure the inching area of the rotating motor at the initial time of lever operation.
   Owing to this device, fitting of the lever in the notch while it is rotating has been enabled smooth at the time of actual working.

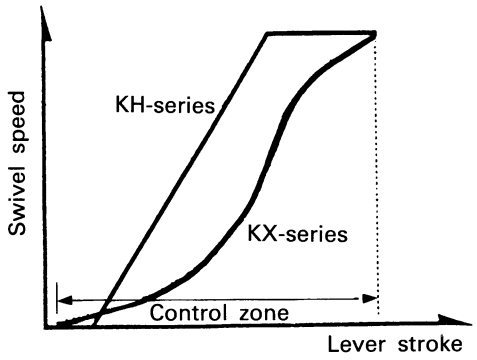

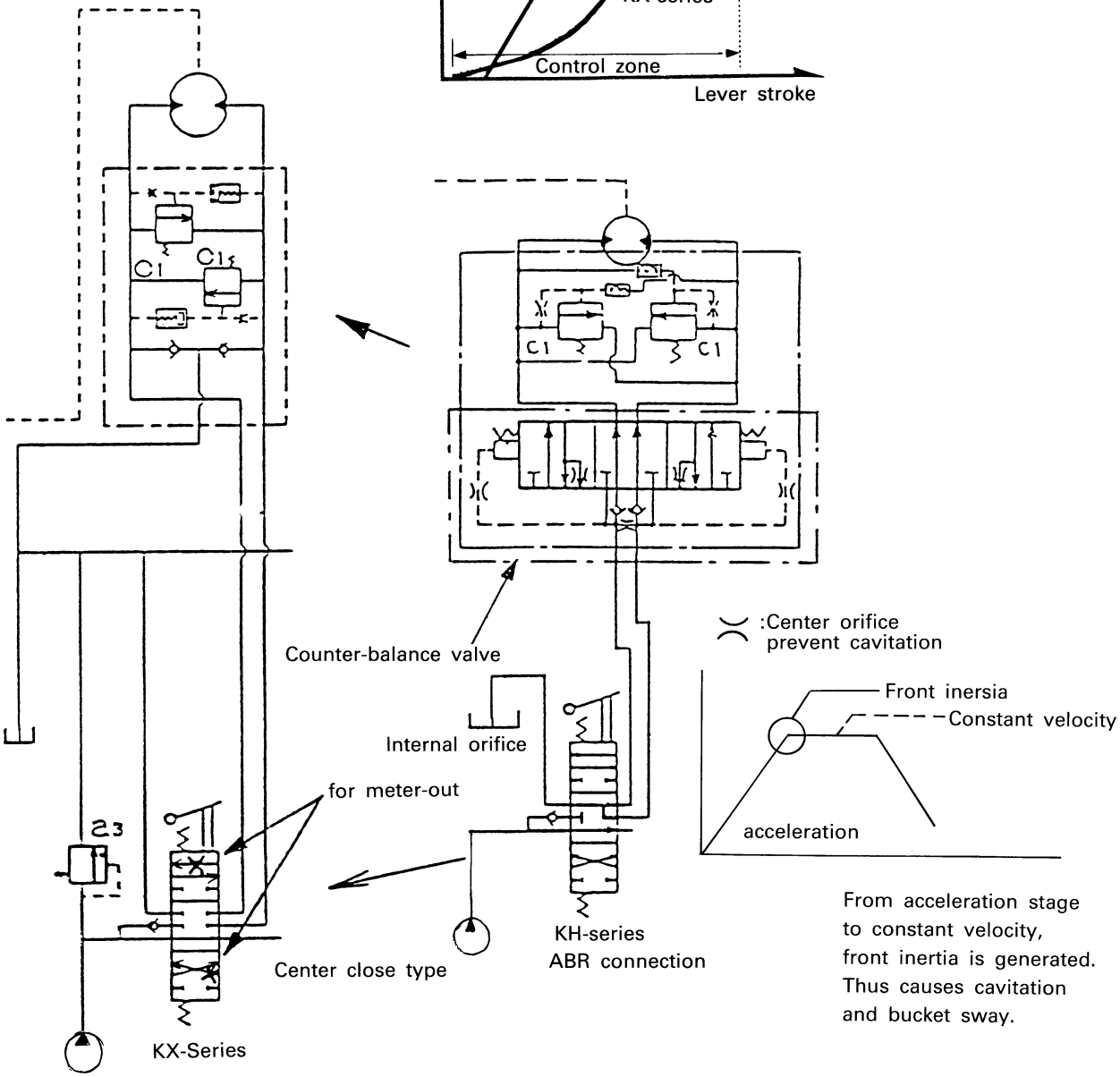

Swivel control valve spool for KX71, 101

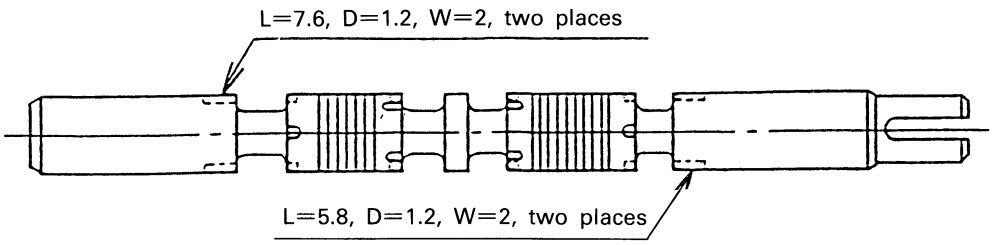

(2) Specifications of swivel system

Machine model	KX36	KX41	KX61	KX71	KX101	KX151
Motor type	2-200C04P4-E	←	2-200C04P5-E	MSF-16E-V	←	HSF-23E-V
Maker	Sumitomo Eaton	←	←	Kayaba	←	←
Displacement [cc/rev]	195	←	←	16.4	←	23.3
Main relief pressure setting [kgf/cm^2]	205	←	150	160	195	190
Brake valve relief setting [kgf/cm^2]	120	←	135(at 17 ℓ/min)	150	203±3	←
Pump displacement [ℓ/min]	11.2	9.8	17.1	18.2	21.3	31.4
Theoretical motor torque [kgf·m]	37.3	←	41.9	3.92	5.09	7.05
Theoretical motor RPM	57.4	50.3	87.7	1110	1299	1348
Torque efficiency [%] ΔP=95kgf/cm^2, Q=12 ℓ/min	89<			90<		
Volumetric effiency [%] ΔP=95kgf/cm^2, Q= ℓ/min	84<			95<		
Slip performance [RPM] T=20kgf·m	0.25 (at 20 kgf·m)			1.0 (at 70 kg/cm^2)		
Rotating direction (View from pinion gear)	A port pressurized: Clock wise B port pressurized: C. C.			P_1 port pressured: C P_2 port pressured: C.C		P_1: C.C P_2: C
Hose joint size	A· B port: PF3/8 T port: PF3/8 Drain port: PF1/4			A· B port: PF3/8 C port: PF1/2 Dr port: PF1/4		
Assy code No.	68191-61282	68191-61282	68311-61281	68391-61281	67651-61281	68671-61281
Oil contamination level	NAS9	←	←	←	←	←
Assy dry weight [kgf]				10	10	15
Pinion shaft teeth No.	12	←	10	13	13	14
Reduction gear ratio	1.0			40/13×39/15×42/14 =24.0	40/13×40/14×42/14 =26.37	40/14×44/16×46/15 =24.10
Piston shaft output torque [kgf·m]	37.3	←	41.9	93.96	134.31	169.89
Final reduction	73/12=6.08	←	98/10=9.80	80/15=5.33	79/15=5.27	84/13=6.46
Swivel torque [kgf·m]	226.8	←	410.6	500.8	707.8	1097.5
Swivel speed [rpm]	9.45	8.27	8.95	8.68	9.35	8.66

T, C ports are connected to oil return line and tank.

(3) Structure of orbitrol type motor

This component consists of the hydraulic motor (orbitol motor) and the pinion assembly. In the hydraulic motor, there are 12 holes of a valve ⑯ and 7 holes of the valve plate ⑭, and the capacity per revolution is 195 cm^3. A pinion ② supported by two bearings ⑫ & ③ is incorporated in the pinion assembly.

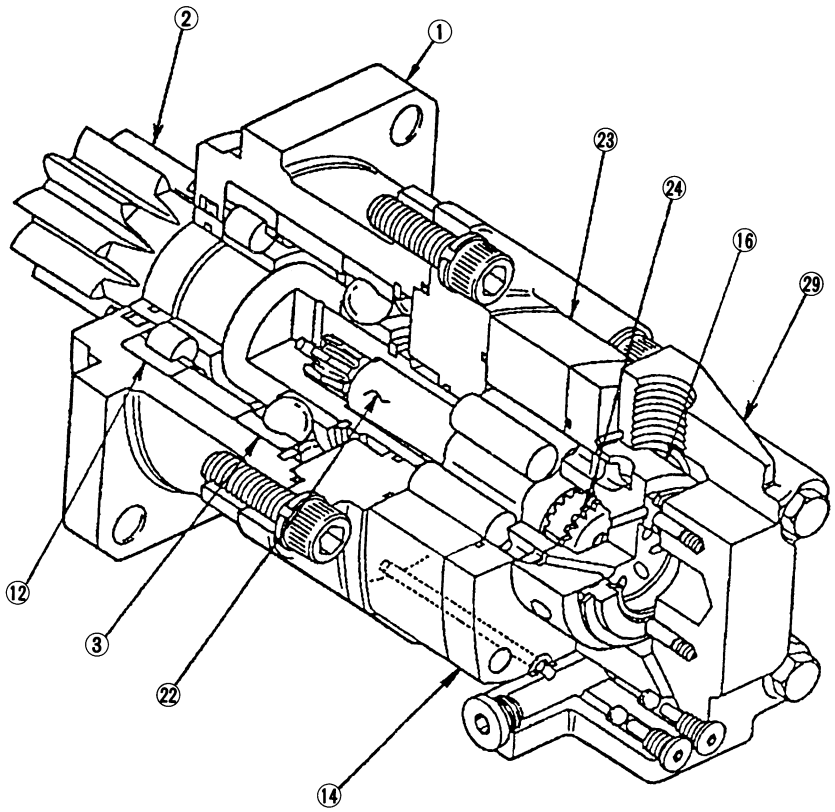

No.	Name
①	Bearing housing
②	Pinion gear
③	Bearing
⑫	Roller bearing
⑭	Valve plate
⑯	Valve
㉒	Drive
㉓	Deroller
㉔	Valve drive
㉙	Valve housing

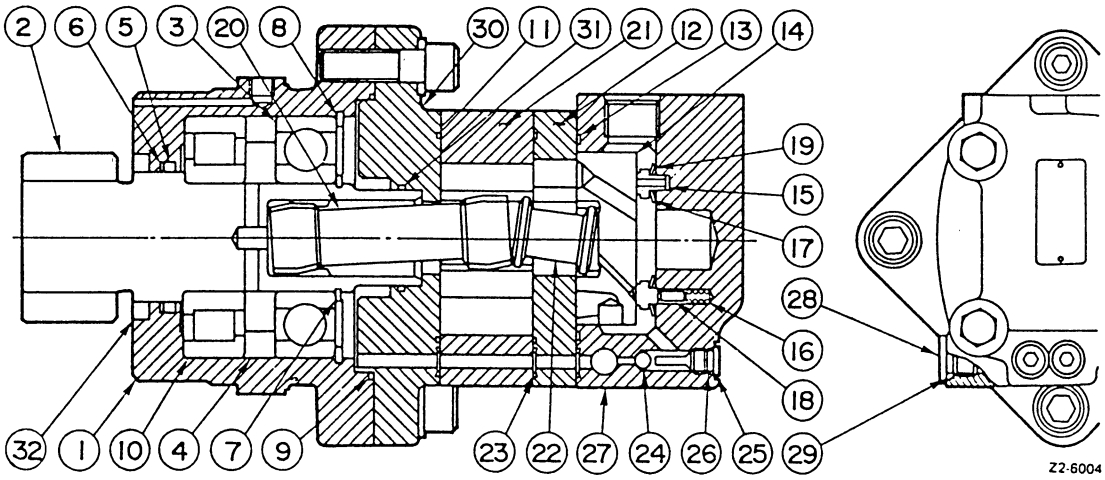

① Housing
② Pinion gear
③ Ball bearing
④ Spacer
⑤ X-ring
⑥ Back-up ring
⑦ Snap ring
⑧ Snap ring
⑨ O-ring
⑩ Roller bearing
⑪ O-ring
⑫ Valve-plate
⑬ O-ring
⑭ Valve
⑮ Balancing plate
⑯ Spring
⑰ Innerface seal
⑱ Pin
⑲ Outer face seal
⑳ Drive
㉑ Rotor subassy
㉒ Valve drive
㉓ O-ring
㉔ Steel ball
㉕ Plug
㉖ O-ring
㉗ Housing
㉘ Plug
㉙ O-ring
㉚ Flange
㉛ O-ring
㉜ Dust seal
㉝ Pinion gear assy
㉞ Pinion gear
㉟ Collor
㊱ O-ring
㊲ Front retainer
㊳ O-ring
㊴ Wear plate
㊵ Shaft face seal
㊶ Retaining ring

(4) Principle of swivel motor operation

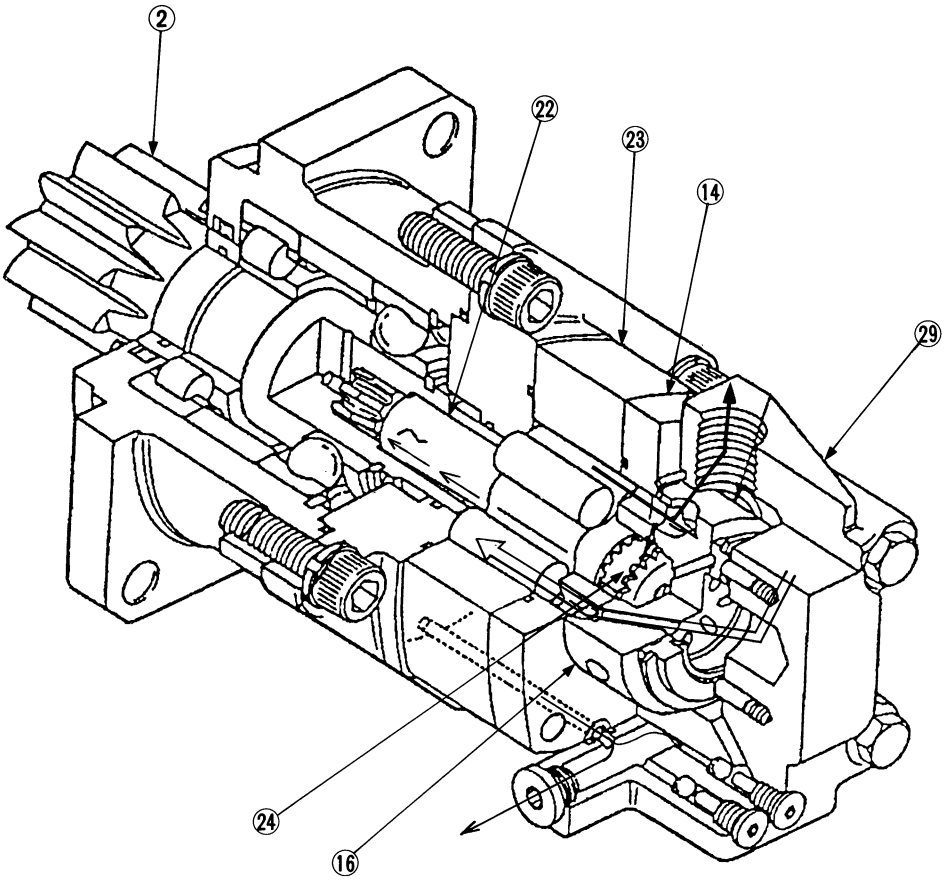

1. Oil flow & power transfer 1.

Hydraulic oil flowed in through the brake valve is fed to the valve housing ㉙. As hydraulic oil is fed to port A, this hydraulic oil flows into an oil hole of the valve ⑯ corresponding to port A, passes through an oil hole of the valve plate ⑭, and enters the diroller ㉓ to turn it. The valve ⑯ is turned through the valve drive ㉔ to change a positional relation between 12 holes of a valve ⑯ and 7 holes of the valve plate ⑭. Consequently, a positional relation of oil to flow to the geroller shifts one after another and is converted to turning force which is taken off by the drive ㉒ spline coupled with the diroller ㉓. This turning force is further transmitted to a pinion ② supported by two bearings.

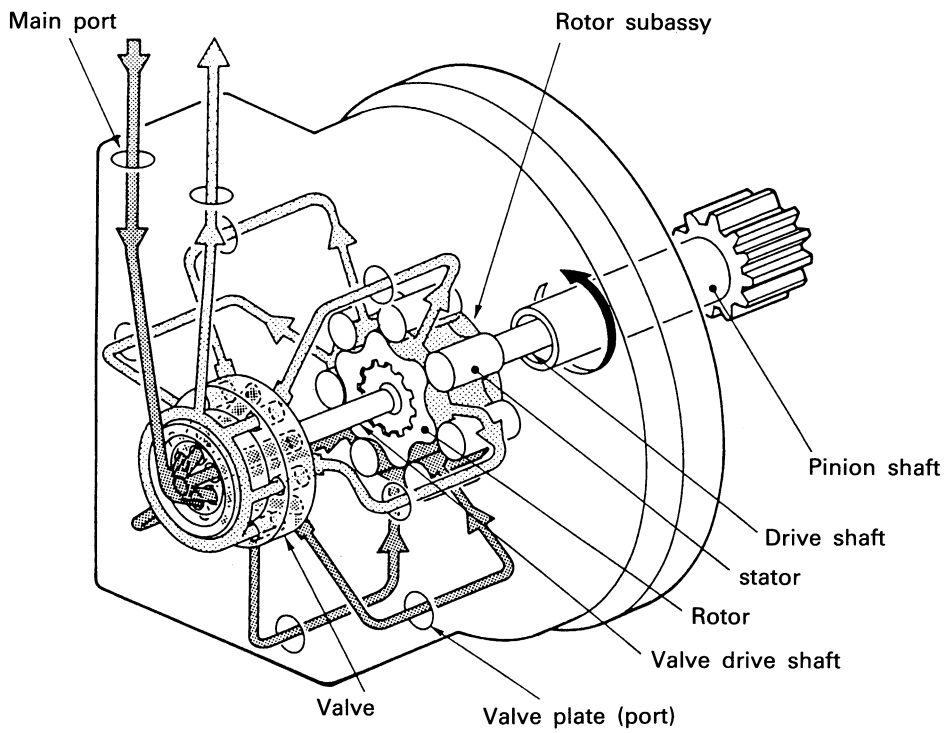

2. Oil flow & power transfer 2.

① High-pressure oil flowed in the main port enters the rotor sub-assembly after passing through the valve and valve plate. The rotor sub-assembly consists of a stator and a rotor while the stator has seven rollers on its inner side and is fixed to the housing. Besides, the inner rotor has six outer teeth. Consequently, seven chambers form inside the rotor sub-assembly. And the rotor is made to be a structure to make a planetary motion on the inner side of the stator.

② On the other hand, the valve has oil holes at 12 spots, and high-pressure oil or return oil flows to half the number of these oil holes at a time, respectively. Seven oil holes are opened in the valve plate similar to the valve plate, and these oil holes are led to seven chambers of the rotor sub-assembly. Consequently, contacting of seven oil holes of the valve plate with whatever of 12 oil holes of the valve opens a line to the rotor sub-assembly.

③ The rotor of the rotor sub-assembly starts a planetary motion as depended on the hydraulic pressure in this way and only the rotation found in planetary motion is taken out by the drive shaft to transmit that rotation to the pinion. Besides, relation of the rotor is transmitted to the valve through the valve drive shaft.

④ Rotating of the valve in this way shifts oil holes of the valve in contact with oil holes of the valve plate one after another. Consequently, high-pressure oil to flow into the rotor sub-assembly also flows into the different chambers one after another. In this way, the motor rotates continuously.

3. Oil flow & power transfer 2.

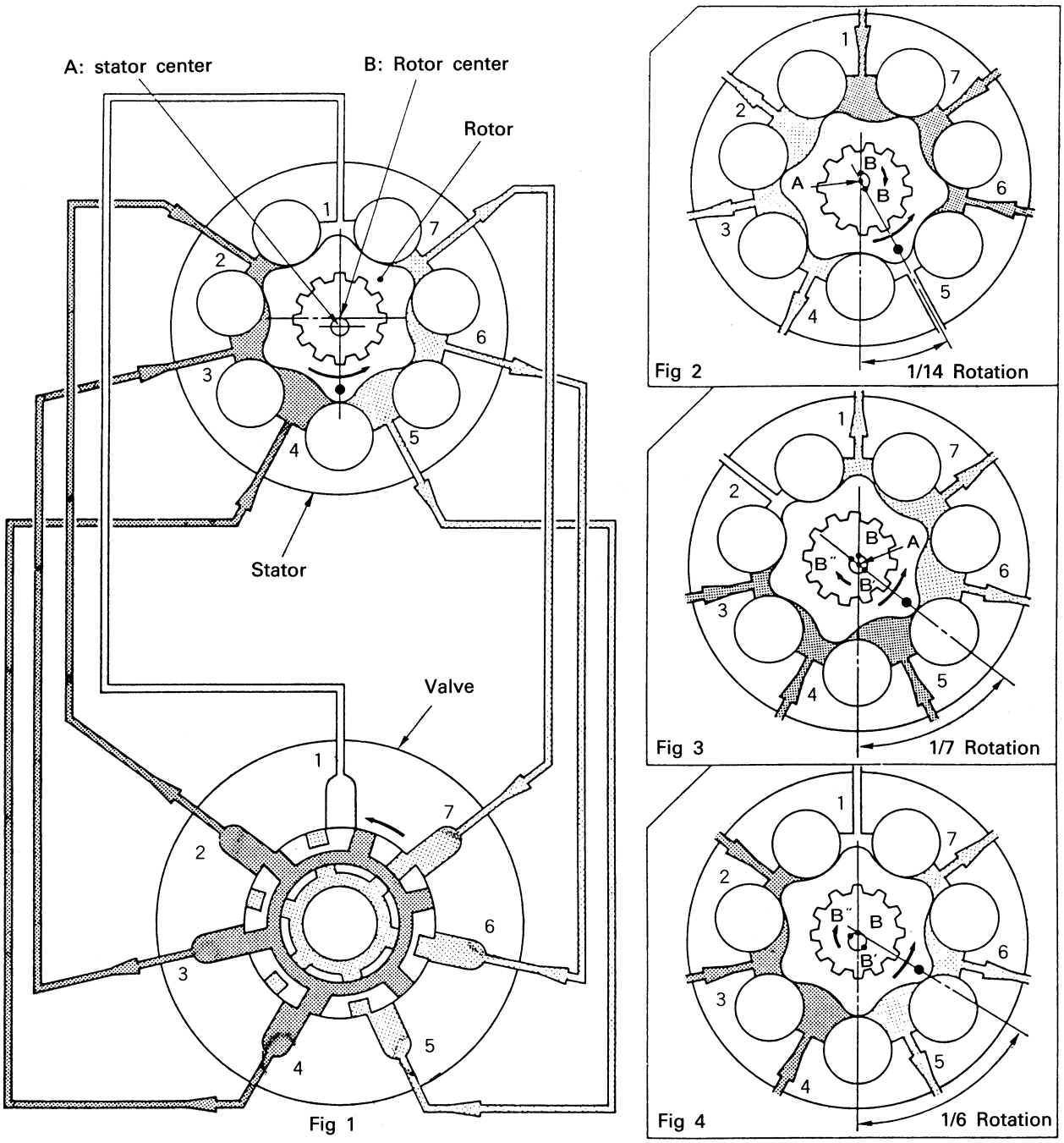

With reference made to Fig. 1, as high-pressure oil is led to the respective chambers 2, 3 & 4, the rotor rotates in the direction of arrow while touching the stator internally. Since the valve also rotates in keeping with rotation of the rotor, a chamber to which high-pressure oil is led also shifts in the direction opposite to arrow one after another. In Fig. 2, the rotor makes a 1/14 turn, and consequently, a chamber to which high-pressure oil is led shifts to chambers 1, 7 & 6, one after another. Center point B of the rotor shifts to point B′ around point A at this time and further shifts from point B′ to point B″ in Fig. 3. That is to say, the center point of the rotor makes a 6/7 turn from point B to point B′ and then to point B″ around point A. In Fig. 4 furthermore, returning from point B″ to point B, a chamber to which high-pressure oil flows in also makes a round. The dot-marked spot of the rotor makes a 1/6 turn at this time in the reverse direction to the movement of point B. Therefore, one turn of the output shaft becomes 7 chambers×6 rounds=42 chambers and so achieved by inflow of high-pressure oil of 42-chamber volume.

4. Brake valve function.

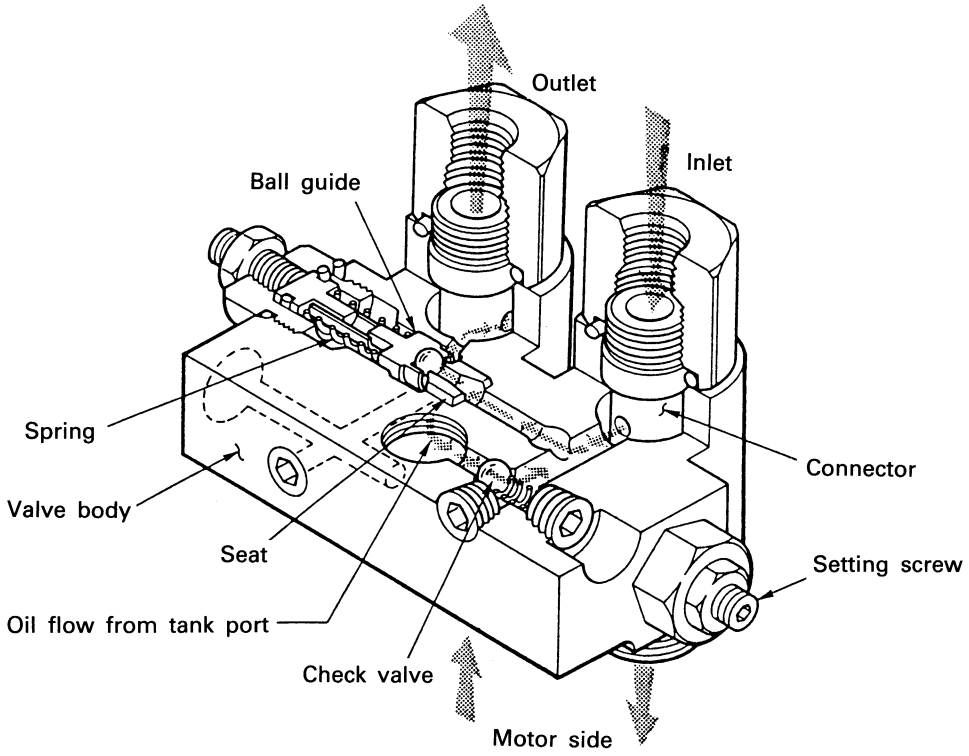

- Usual oil flow High-pressure oil flowed into the brake valve flows to the motor inlet after passing through the connector, and oil came out of the motor flows out after passing through a connector on side opposite to the former connector.
- Oil flow in the case when a pressure of higher than the set pressure is produced There is a case when pressure of higher than the set pressure is produced due to an effect of such as inertia load, for instance, in time of acceleration/deceleration or stopping. At such a time, overcoming the spring power, high-pressure oil opens the seat plane formed of a ball press fitted to the seat and ball guide and flows out after passing through an oil hole which is connected to a port on the opposite side (low-pressure side) to prevent an abnormal surge pressure from occurring.
- Oil flow in the case when a negative pressure is produced The check valve is being closed normally. However, when a negative pressure is produced and the differential pressure of the tank port and the main port becomes higher than the spring power, the check valve opens and oil flows in from the tank port to prevent the cavitation from occurring.

[6] Travel motor (Wheel motor)

(1) Outline

1. MAG motor type code

MAG-26V-320-1

- Motor, Axial, Gear
  Axial piston motor with planetary gear reduction type
- Piston replacement (cc/rev)
- Tow speed type
- Output torque
- Design change

RGC-10-31-2

- Reduction gear case
- Motor displacement
- Reduction ratio
- Design change

2. MAG motor total displacement; Q_{mT}
   This indicates the oil displacement for one turn of wheel motor drum or sprocket.

$$Q_{mT}=q_m \times i$$

(Example: KX101)

$$Q_{mT}=22.8\times 53$$
$$=1208.4 \text{ (cc/rev)}$$

Q_{mT} : MAG motor total displacement (cc/rev)
q_m : Piston motor displacement (cc/rev)
i : Reduction gear ratio

3. Sprocket speed; N_s

$$N_s=\frac{Q_p}{Q_{mT}}\times 1000\times \eta_v$$

(Example: KX101)

$$N_s=\frac{32.3}{1208.4}\times 1000\times 0.97$$
$$=25.93 \text{ rpm}$$

N_s : Sprocket speed (Rpm)
Q_{mT} : MAG motor total displacement (cc/rev)
Q_p : Main pump delivery rate (ℓ/min)
η_v : Volumetric efficiency
$\eta_v \fallingdotseq 0.97/0.95$

4. Output torque; T_m

$$T_m=T_p\times i$$

$$T_p=\frac{P\times q_m}{200\pi}\times \eta_m \qquad \eta_m \fallingdotseq 0.86$$

(Example: KX101)

$$T_p=\frac{210\times 22.8}{200\pi}\times 0.86$$
$$=6.56 \text{ kgf·m}$$
$$T_m=7.24\times 53$$
$$=347.5$$

T_m : Wheel motor output torque (kgf·m)
T_p : Piston motor torque (kgf·m)
p: : Motor line pressure (kgf·cm^2)
η_m : Mechanical efficiency
$\eta_m \fallingdotseq 0.86/0.82$

5. Piston motor speed; N_p

$$N_p=\frac{Q_i\times 1000\times \eta_v}{q_m}, \quad \eta v \fallingdotseq 0.97$$

6. Reduction speed ratio; i

$$i=-(i_1\times i_2-1)=-\left(\frac{Z_1+Z_3}{Z_1}\times\frac{Z_4\times Z_6}{Z_4}-1\right)$$

$$N_D=\frac{N_p}{i}$$

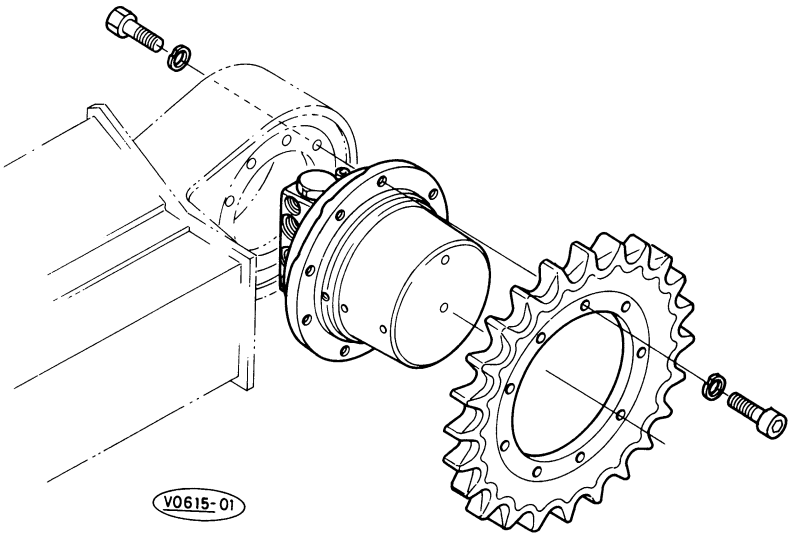

(2) Specifications of travel system

Machine model			KX36	KX41	KX61	KX71	KX71	KX101	KX151
Motor assy code No.			68151-6129-1	68191-6129-1	68311-6139-1	68311-6139-1	68311-6129-1	68651-6129-1	68671-6129-1
Motor assy type Axial piston motor			MAG-10-80-1	MAG10-90-1	MAG26V-270	MAG26V-270	MAG18-270	MAG-26V-350-1	MAG-33V-500-1
Reduction gear case type Planetary 2 stage reduction type			RGC-10-31	RGC-10-31	RGC-26V-42-4	RGC-26V-42-4	RGC-18V-53-1	RGC-26V-53-2	RGC-33V-59-10
Reduction gear ratio			31.0	31.0	53	53	53	53	58.943
MAG motor total displacement [cc/rev]		Low	305.7	338.5	955.8	955.8	975.2	1208.4	1738.8
		High	—	—	503.1	503.1	—	636	884.1
Axial piston motor	Motor displacement [cc/rev]	Low	9.86	10.92	22.8	22.8	18.4	22.8	29.5
		High	—	—	12.0	12.0	—	12.0	15.0
	Max. Operating pressure [kgf/cm^2]		205	210	165	200	200	210	210
	Pump delivery rate [ℓ/min]		11.2	13.2	28.2	29.12	29.12	32.34	36.96
	Motor output torque [kgf· m]	Low	3.22	3.65	5.99	7.26	5.86	7.62	9.86
		High	—	—	3.15	3.82	—	4.01	5.01
	Motor revolution [RPm]	Low	1135.9	1208.8	1236.8	1277.2	1582.6	1418.4	1252.9
		High	—	—	2350.0	2426.7	—	2695.0	2464.0
	Drain pressure [kgf/cm^2]	Normal operation	1.0>	1.0>	1.0>	1.0>	1.0>	1.0>	1.0>
		Intermittent Max.	5.0>	5.0>	5.0>	5.0>	5.0>	5.0>	5.0>
Output shaft torque [kgf·m]		Low	99.7	113.1	251.0	304.3	310.6	403.9	581.2
		High	—	—	132.1	160.1	—	212.6	295.5
Travel speed [km/h]		Low	1.88	2.00	2.07	2.14	2.12	1.88	1.81
		High	—	—	3.93	4.06	—	3.56	3.56
Sprocket P. C. D. [mm]			277.2	277.2	376.6	376.6	376.6	376.6	458
Effiency η_m, η_v, η_T			η_T=0.82~0.86, η_V=0.95~0.97						
Theoretical traction force [kgf]			1439.1	1632.6	2666.1/1403.2	3231.6/1700.8	2837	4289.7/2257.7	5075.6/2580.8
Sproket revolution [rpm]		Low	36.64	38.99	29.50	30.47	29.86	26.76	21.26
		High	—	—	56.06	57.88	—	50.85	41.80
Counterbalance valve		Spool switching pressure [kgf/cm^2]	5~6	5~6	6~7	6~7	6~7	6~7	6~7
		Check valve cracking pressure [kgf/cm^2]	0.1~0.3	0.1~0.3	0.1~0.3	0.1~0.3	0.1~0.3	0.1~0.3	0.1~0.3
Overload relief valve		Cracking pressure [kgf/cm^2]	—	—	220	220	—	220	220
		Full flow pressure [kgf/cm^2] at 15ℓ/min	—	—	255	255	—	255	255
High-Low valve spool switching pressure [kgf/cm^2]			—	—	4<	4<	—	4<	4<
Assy weight [kgf]			18	19			30	38	58
Lub. oil amount [ℓ]Gear oil SAE #90			0.25	0.25	0.5	0.5	0.5	0.6	1.2

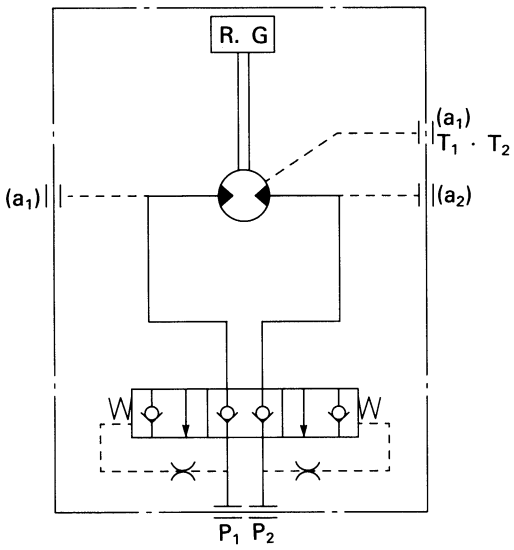

(KX36, 41)

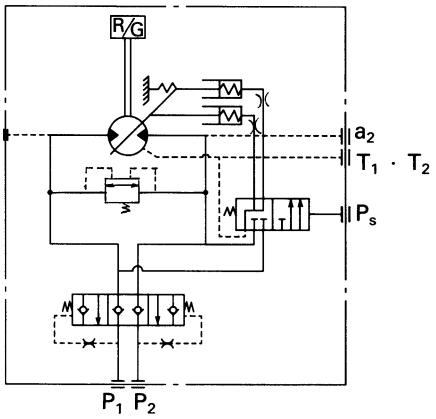

(3) Structure

Wheel motor (KX36, 41)

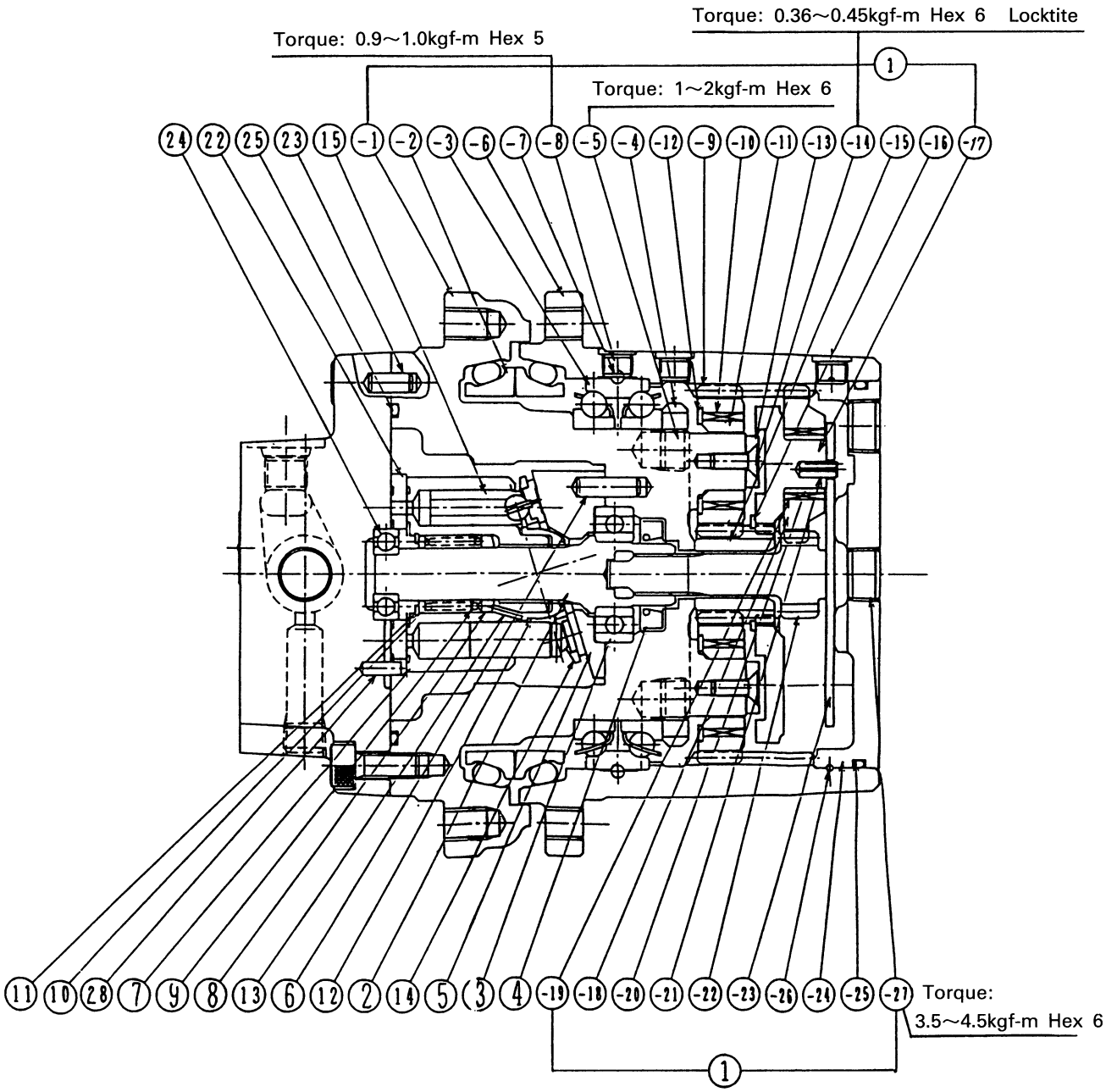

① Gear case assy
-① Flange holder
-② Seal
-③ Angular bearing
-④ Ring nut
-⑤ Plug
-⑥ Housing
-⑦ Ball (5/32)
-⑧ Plug
-⑨ Pranetary gear B
-⑩ Roller bearing
-⑪ Coller
-⑫ Washer
-⑬ Thrust plate
-⑭ Screw
-⑮ Sun gear
-⑯ Snap ring
-⑰ Holder
-⑱ Pranetary gear B
-⑲ Roller bearing
-⑳ Bearing (Inner)
-㉑ Spring pin
-㉒ Driver gear
-㉓ Thrust plate
-㉔ Cover
-㉕ O-ring
-㉖ Wire
-㉗ Plug
② Shaft
③ Ball bearing
④ Oil seal
⑤ Swash plate
⑥ Pin
⑦ Cylinder bolck
⑧ Spring holder
⑨ Spring
⑩ Washer
⑪ Snap ring
⑫ Pin
⑬ Retainer holder
⑭ Retainer plate
⑮ Piston assy
㉒ Valve plate
㉓ Parallel pin
㉔ Ball bearing
㉕ O-ring
㉗ Base plate
㉘ Plunger

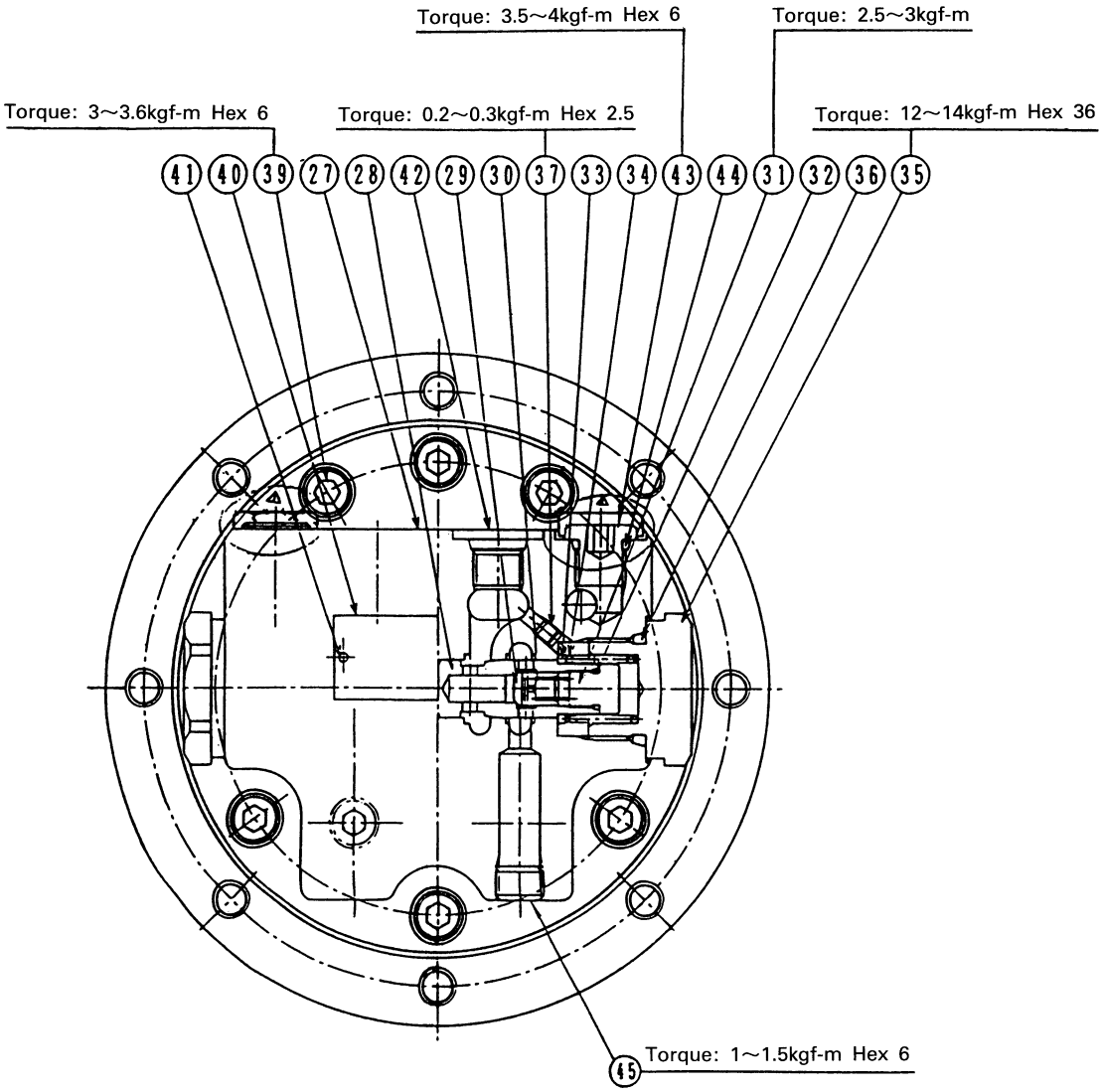

㉙ Check valve
㉚ Spring
㉛ Plug
㉜ O-ring
㉝ Spring seat
㉞ Spring
㉟ Cap
㊱ O-ring
㊲ Orifice
㊳ Pin
㊴ Hex bolt
㊵ Name plate
㊶ Driver screw
㊷ Shpping plug
㊸ Plug
㊹ O-ring

Wheel motor: KX61, 71, 101, 151

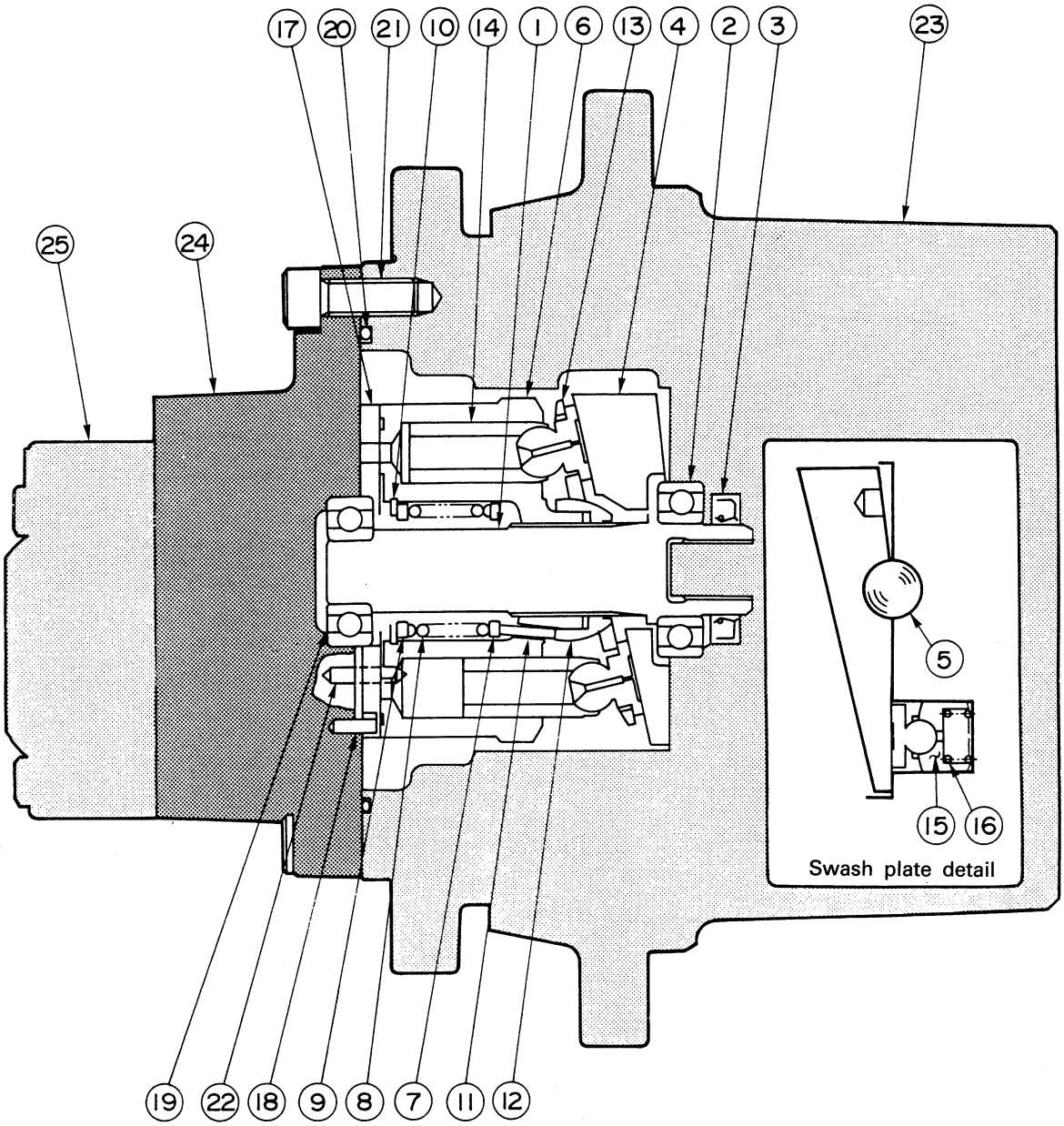

① Shaft
② Ball bearing
③ Oil seal
④ Swash plate
⑤ Steel ball
⑥ Cylinder bolck
⑦ Collar
⑧ Spring
⑨ Washer
⑩ Snap ring
⑪ Pin
⑫ Retainer holder
⑬ Retainer plate
⑭ Piston subassy
⑮ Piston subassy
⑯ Spring
⑰ Valve plate
⑱ Pin
⑲ Ball bearing
⑳ O-ring
㉑ Socket bolt
㉒ Pin
㉓ Reduetion gear case
㉔ Counter balance valve
㉕ Relief valve block subassy

Planetary reduetion gear case assy

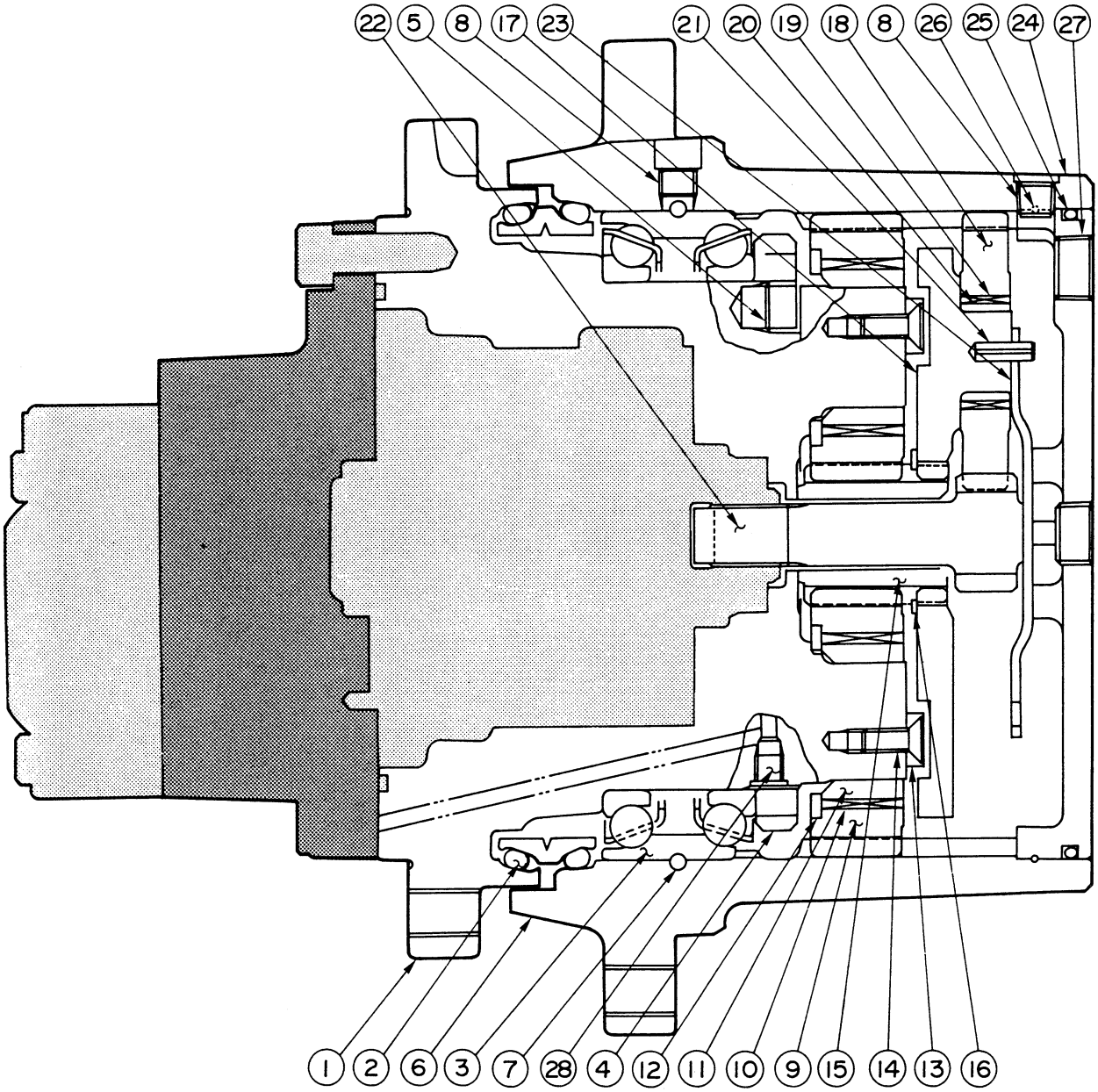

① Flange holder
② Floating seal
③ Angular bearing
④ Ring nut
⑤ Plug
⑥ Housing
⑦ Steel ball
⑧ Plug
⑨ Planet gear B
⑩ Bearing cage & roller
⑪ Collar
⑫ Thrust washer
⑬ Thrust plate
⑭ Bolt
⑮ Sun gear
⑯ Snap ring
⑰ Holder
⑱ Planet gear A
⑲ Bearing cage & roller
⑳ Inner race
㉑ Spring pin
㉒ Drive gear
㉓ Thrust plate
㉔ Cover
㉕ O-ring
㉖ Wire
㉗ Plug
㉘ Plug

Counterbalance valve & relief valve block sub-assy

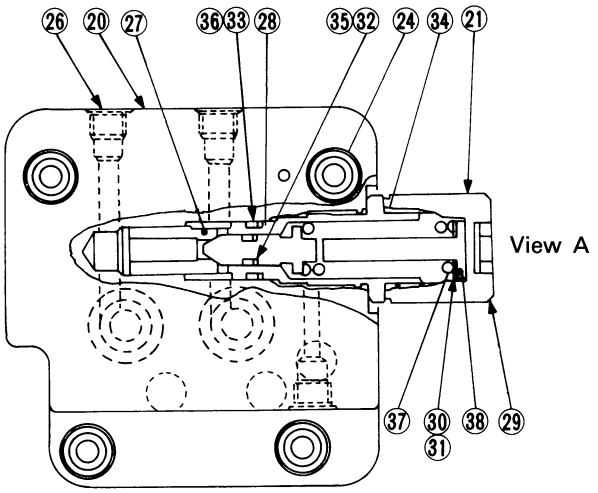

Relief valve block sub-assy

Section B-B

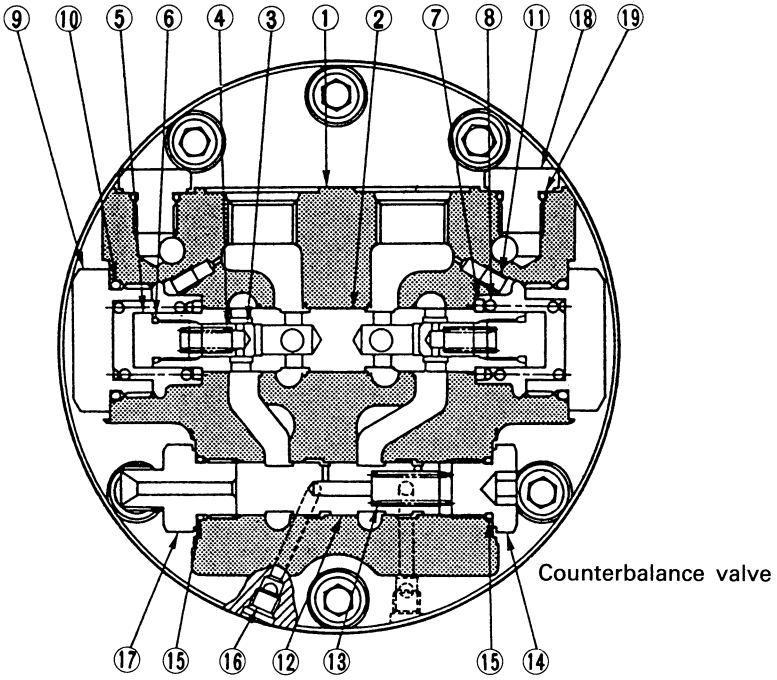

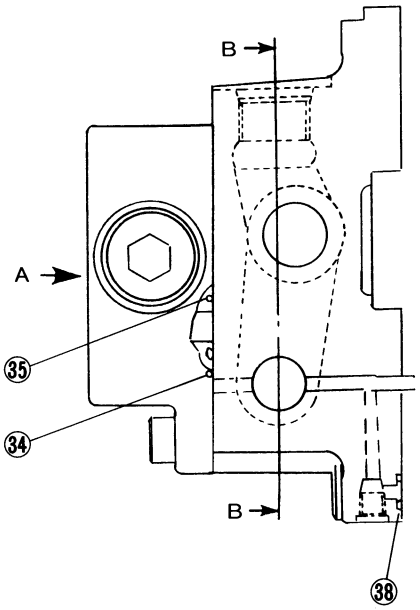

① Base plate
② Plunger
③ Check valve
④ Spring
⑤ Plug
⑥ O-ring
⑦ Spring seat
⑧ Spring
⑨ Cap
⑩ O-ring
⑪ Orifice
⑫ Spool
⑬ Spring
⑭ Plug
⑮ O-ring
⑯ Plug
⑰ Plug
⑱ Plug
⑲ O-ring
⑳ Valve body
㉑ Relief valve sub-assy
㉒ Relief housing
㉓ Poppet
㉔ Poppet seat
㉕ Spring seat
㉖ Spring
㉗ Plug
㉘ O-ring
㉙ O-ring
㉚ Backup ring
㉛ Piston
㉜ O-ring
㉝ Backup ring
㉞ O-ring
㉟ O-ring
㊱ Socket bolt
㊲ Plug
㊳ O-ring

② Shaft
③ Ball beariag
④ Oil seal
⑤ Swash plate
⑥ Steel ball
⑦ Cylinder block
⑧ Collar
⑨ Spring
⑩ Washer
⑪ Snap ring
⑫ Pin
⑬ Retainer holder
⑭ Retainer plate
⑮ Piston assy
⑲ Hi-Lo piston assy
⑳ Spring
㉕ Valve plate
㉖ Pin
㉗ Boll bearing
㉘ O-ring
㉙ O-ring
㉛ Plunger
㉜ Check valve
㉝ Spring
㉞ O-ring
㉟ Plug
㊱ Spring seat
㊲ Spring
㊳ Cap
㊴ O-ring
㊵ Orifice
㊶ Spool
㊷ Spring
㊸ Plug
㊹ O-ring
㊺ Plug
㊻ Plug
㊼ Orifice
㊽ Socket head bolt
㊾ Pin
㊸ Socket plug
㊺ Plug
㊻ O-ring

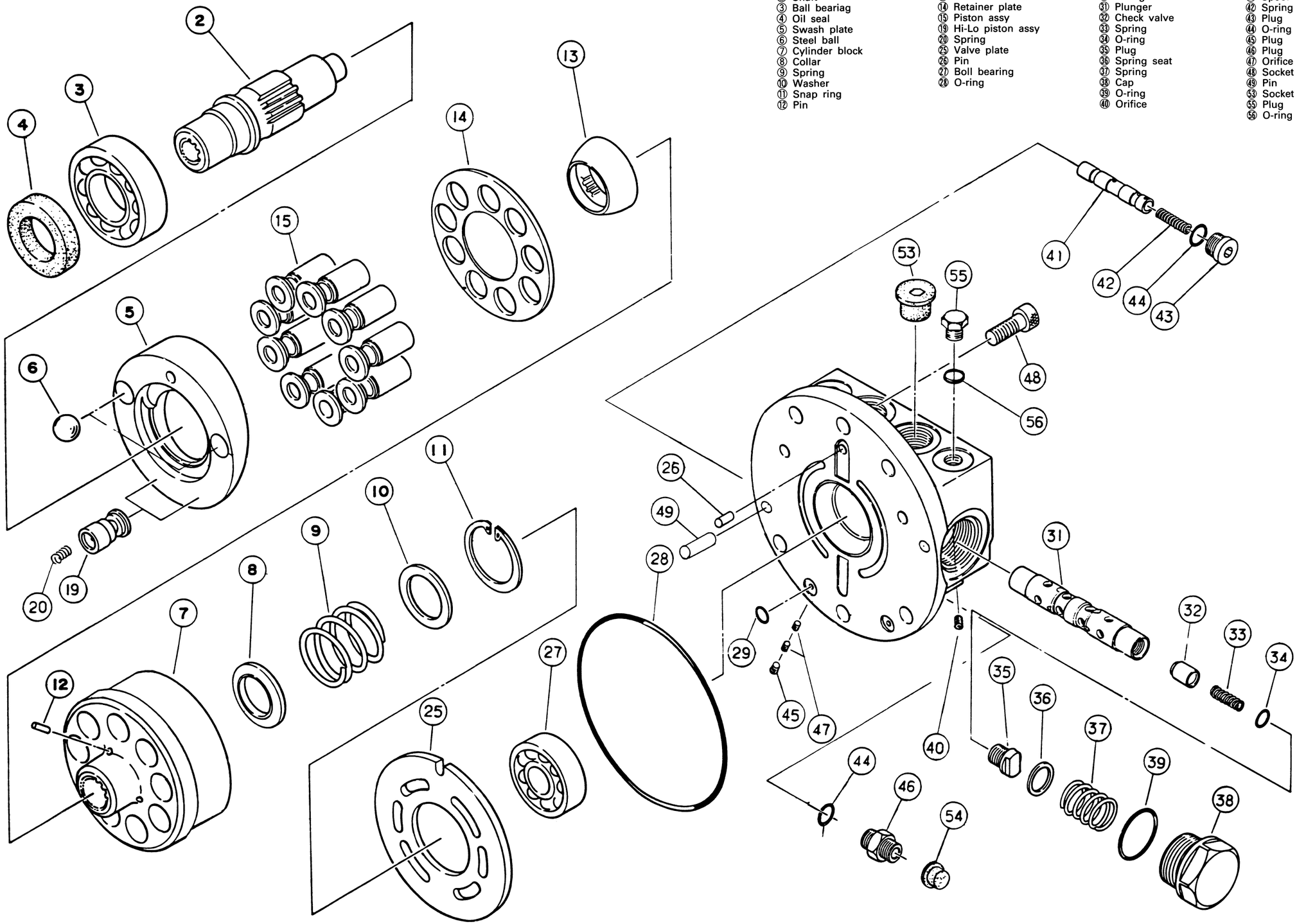

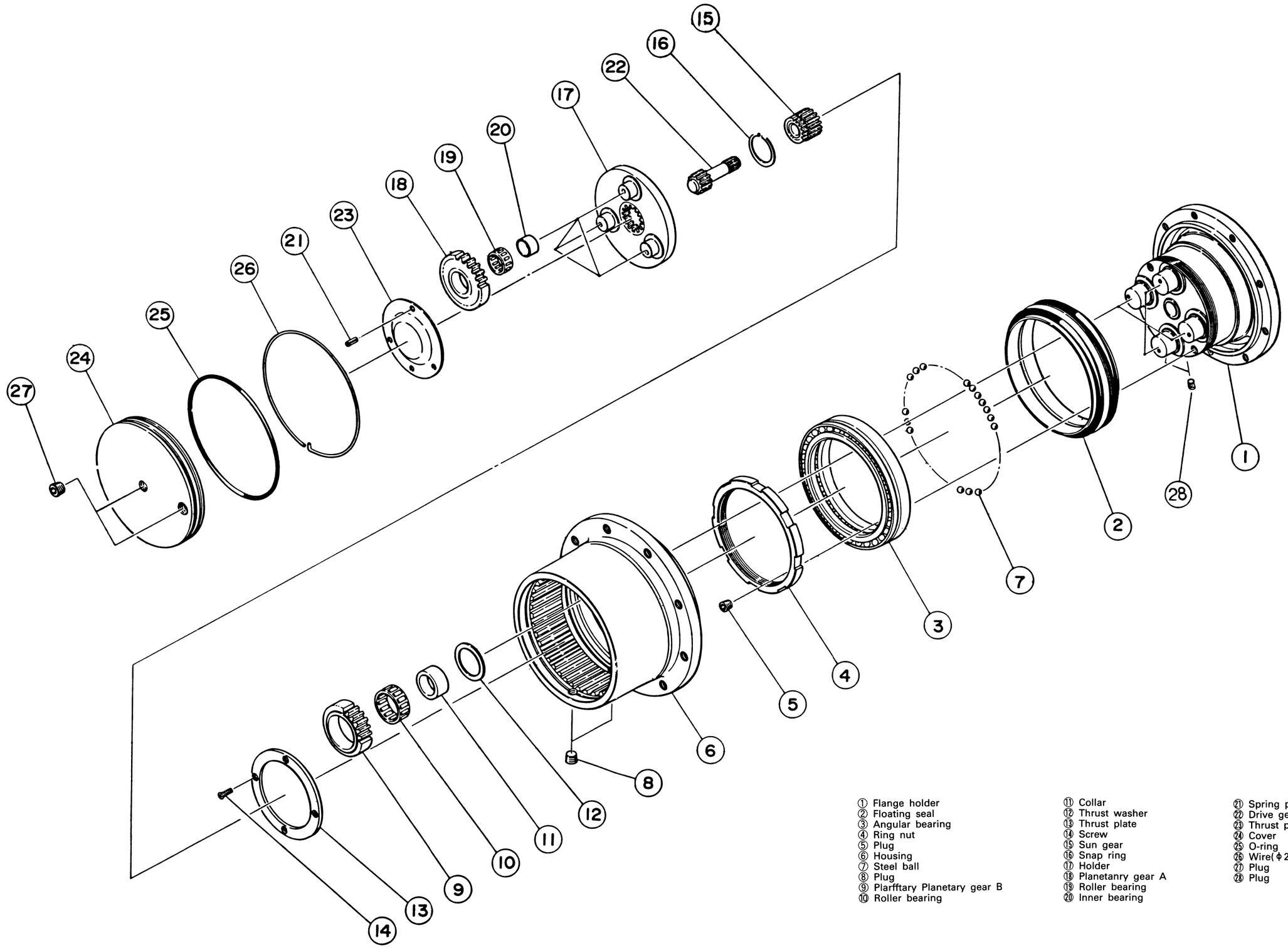

① Flange holder
② Floating seal
③ Angular bearing
④ Ring nut
⑤ Plug
⑥ Housing
⑦ Steel ball
⑧ Plug
⑨ Plarfftary Planetary gear B
⑩ Roller bearing
⑪ Collar
⑫ Thrust washer
⑬ Thrust plate
⑭ Screw
⑮ Sun gear
⑯ Snap ring
⑰ Holder
⑱ Planetanry gear A
⑲ Roller bearing
⑳ Inner bearing
㉑ Spring pin
㉒ Drive gear
㉓ Thrust plate
㉔ Cover
㉕ O-ring
㉖ Wire(φ2×510)
㉗ Plug
㉘ Plug

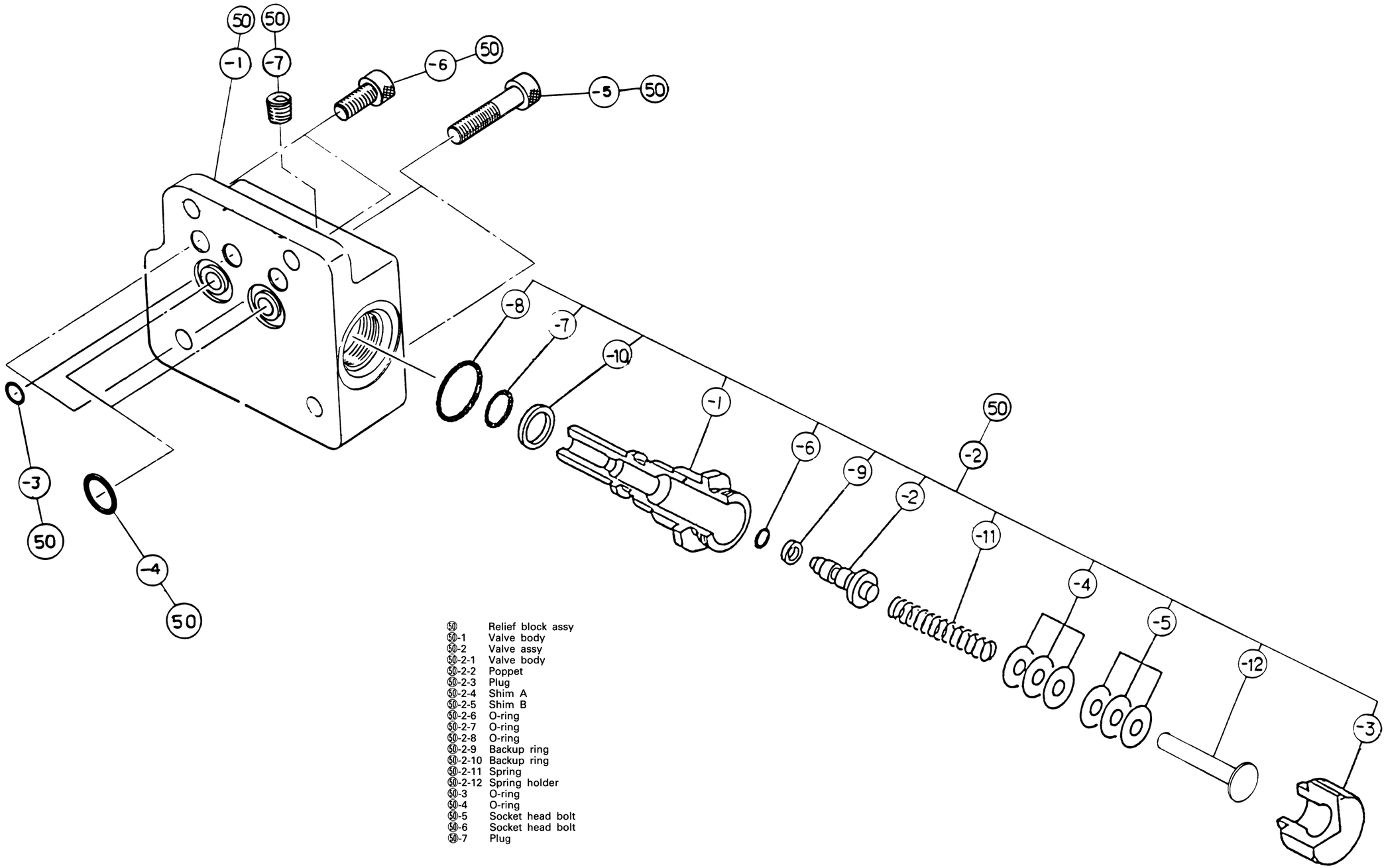

㊿	Relief block assy
㊿-1	Valve body
㊿-2	Valve assy
㊿-2-1	Valve body
㊿-2-2	Poppet
㊿-2-3	Plug
㊿-2-4	Shim A
㊿-2-5	Shim B
㊿-2-6	O-ring
㊿-2-7	O-ring
㊿-2-8	O-ring
㊿-2-9	Backup ring
㊿-2-10	Backup ring
㊿-2-11	Spring
㊿-2-12	Spring holder
㊿-3	O-ring
㊿-4	O-ring
㊿-5	Socket head bolt
㊿-6	Socket head bolt
㊿-7	Plug

(4) Function

Wheel motor circuit diagram

1. One speed stage type

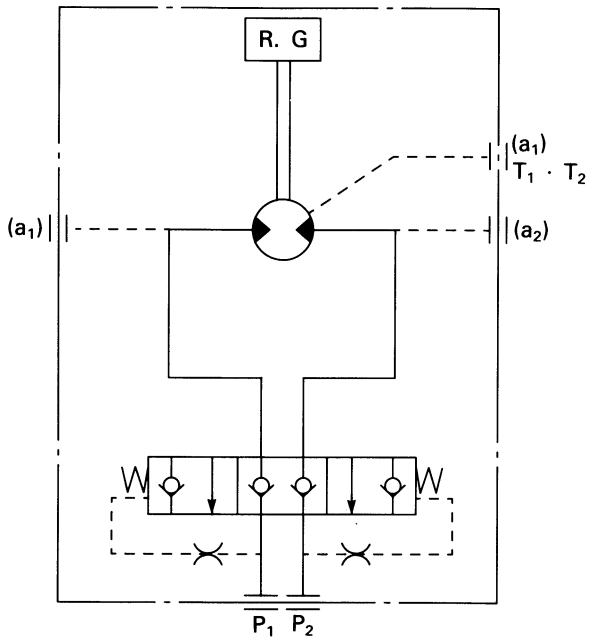

- Relief valve assy is installed in Hi-Low speed type wheel motor.

2. Two speed stage type

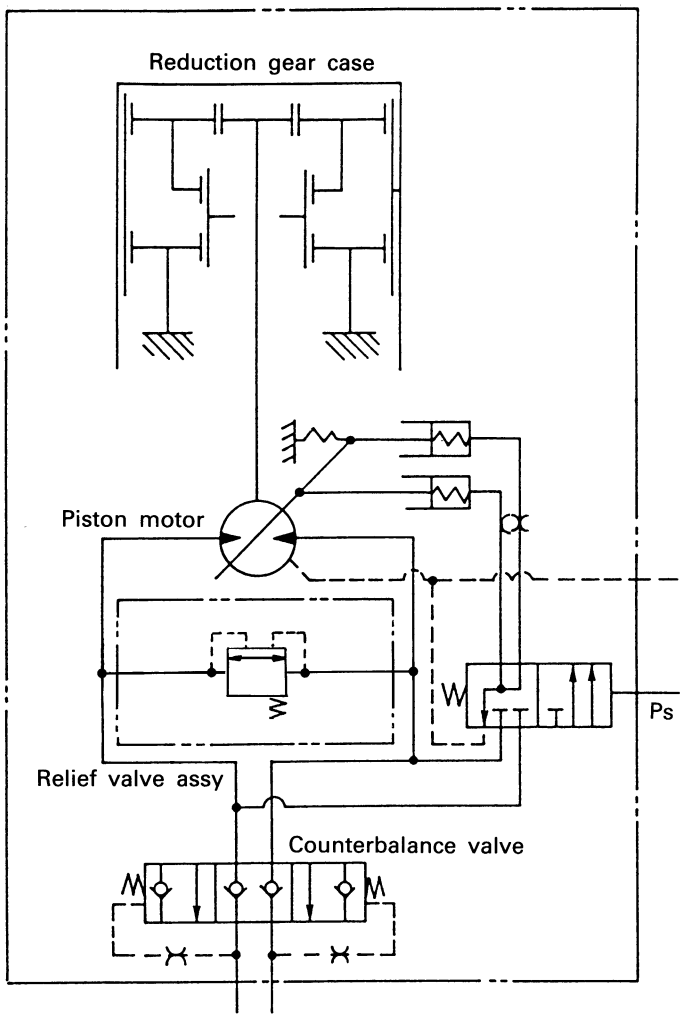

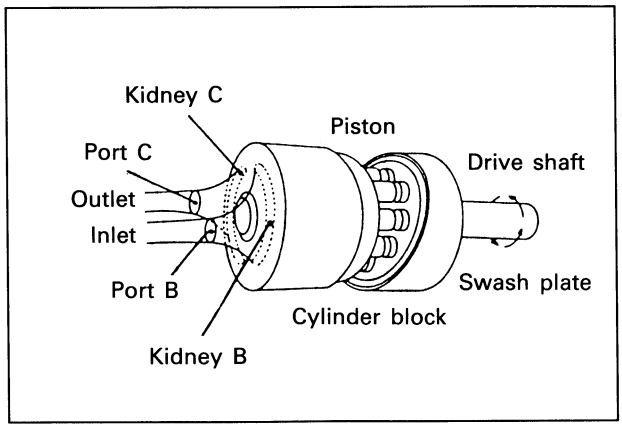

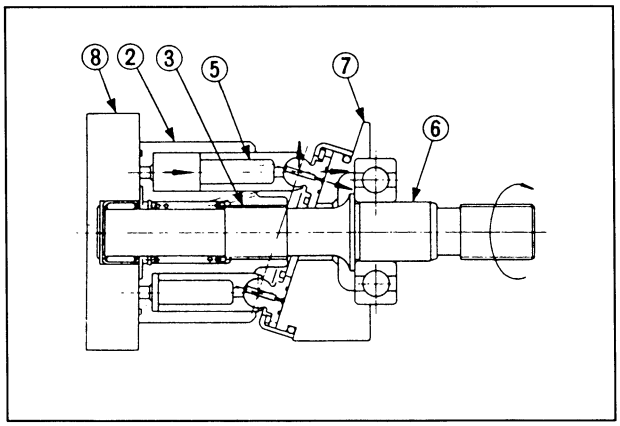

2. Operation of piston motor

Nine pistons have been incorporated in cylinder block, and its one end is touching a valve plate having two crescent ports B & C. Besides, the cylinder block is free to rotate and is coupled to a shaft through splines. On the other hand, the swash plate is fixed to the housing.

As high-pressure oil is led to port B, the swash plate is pressed with force F per piston. F=P×A, whereas P is pressure, and A is piston sectional area.

Force F a piston pushes the swash plate is divided into two components, i.e., force F_1 to push the shaft and force F_2 to rotate the cylinder block. And a turning force is generated in the cylinder block by the sum total of rotation directional components of pistons on the high-pressure side, torque is transmitted to the shaft through splines and thus the shaft rotates. As high-pressure oil is led to port C conversely, rotation resulted becomes reverse to the aforementioned.

The output torque and number of revolution of a piston motor obtained according to the aforementioned principle of operation are calculated by the following formulae determined by pressure (P) and inflow quantity (Q) supplied to the motor:

$$T=\frac{P\times q\times \eta_m}{2\times \pi\times 10^2}$$

$$N=\frac{Q\times 10^3\times \eta_v}{q}$$

T : Output torque (kgf·m)
N : Revolution speed (rpm)
P : Operating pressure (kgf/cm²)
Q : Pump flow rate (ℓ/min)
q : Theoretical displacement (cc/rev)
η_m : Mechanical efficiency
η_v : Volumetric efficiency

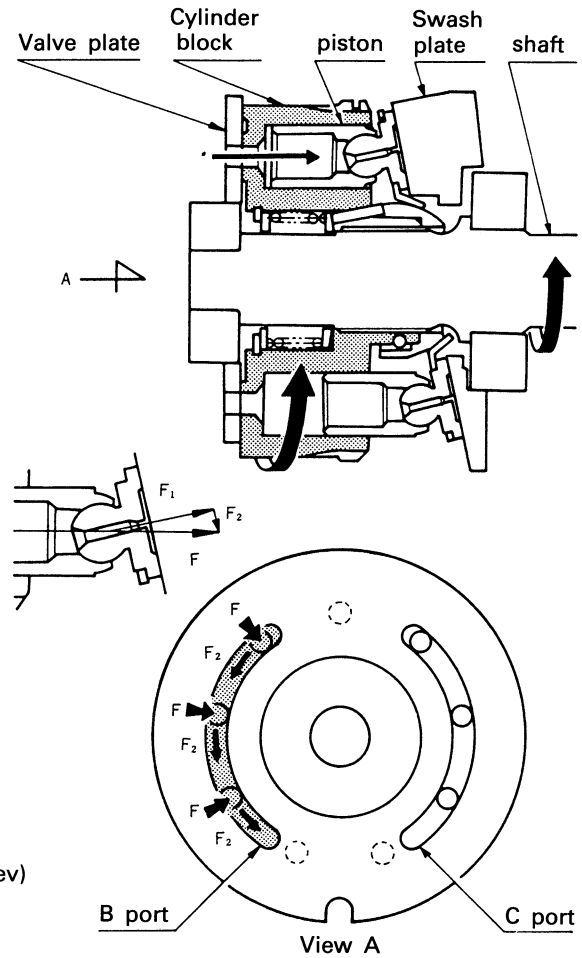

3. Operation of counterbalance valve

In the case when high-pressure oil is led to port P_1, oil pushes up the check valve and flows to motor port M_1 as well as flows to chamber B of the pilot unit to fill it up with oil. Since pressurized oil flows into the motor from port M_1 in an attempt to rotate the motor but return oil from the motor is stopped of its flow by the check valve even if flowed into port M_2, pressures of port P_1 and chamber B rise. When the pressure of chamber B rises above the set valve of spring C, the plunger moves to the left to let port M_2 opened to port P_2. Consequently, the motor rotates.

In the case when oil to flow out from port M_2 becomes greater than oil to flow into port M_1 as rotation of the motor becomes too fast, pressures of port P_1 and chamber B drop. When the pressure of chamber B drops below the set valve of spring C, the plunger tries to return to the right. Since return oil is consequently throttled at area D, it causes a back pressure to generate in port M_2 and thus show down rotation of the motor. Since pressures of port P_1 and chamber B rise again as rotation of the motor slows down and the plunger moves to the left, a back pressure generated in port M_2 vanishes. In this way, the counterbalance valve controls to rotate the motor at a speed corresponding to the flow rate of oil to flow into the motor. As high-pressure oil led to port P_1 is shut off, ports P_1

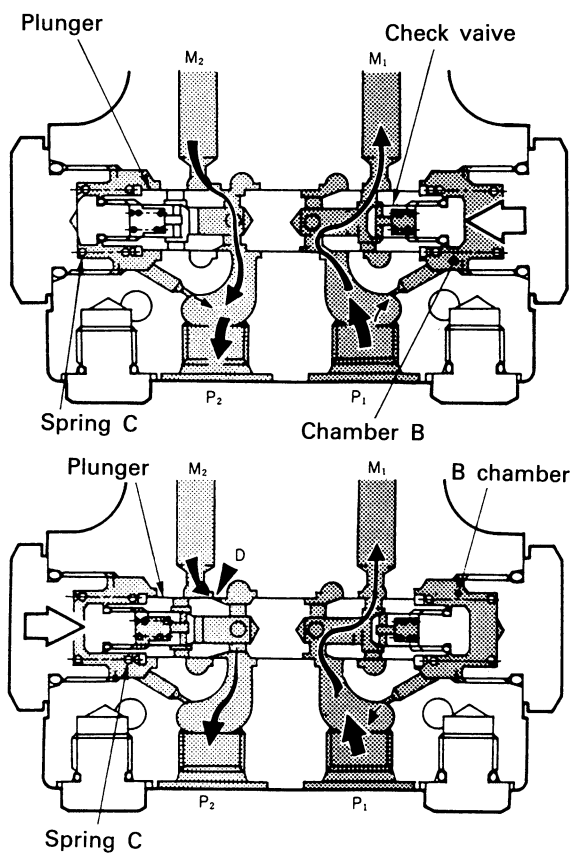

& P_2 equal in pressure, and the plunger tries to return to the neutral position with spring power. Consequently, oil in chamber B is pushed out to port P_1. Since oil returns to port P_1 while being throttled by orifice, the plunger slowly returns to the neutral position. In this way, the counterbalance valve stops the motor while absorbing a shock in time of stopping.

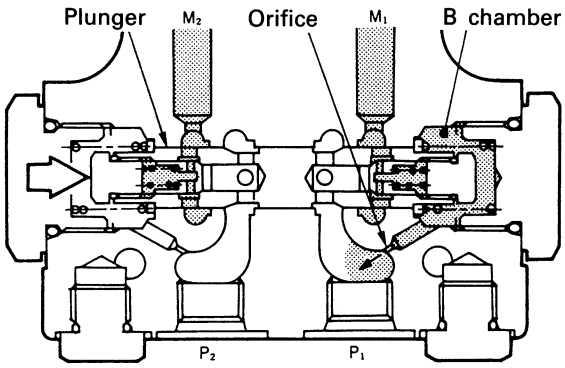

Operation of relief valve

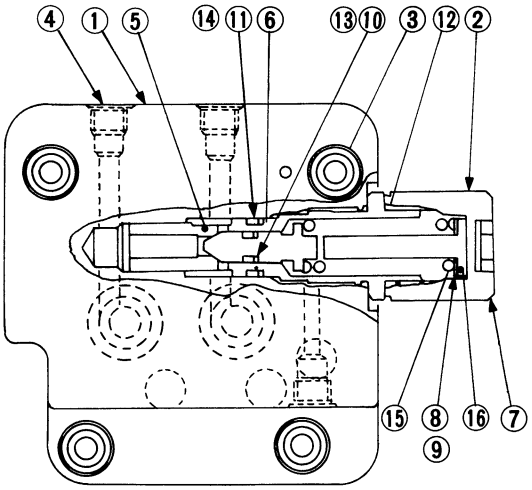

Relief block subassy

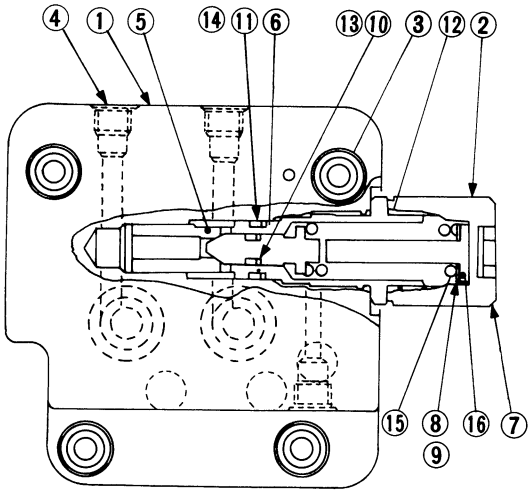

Relief block subassy

① Valve body
② Valve assy
③ Hex·bolt M8×25
④ Plug
⑤ Valve body
⑥ Poppet
⑦ Plug
⑧⑨ Shim A, B
⑩⑪⑫ O-ring
⑬⑭ Backup ring
⑮ Spring
⑯ Spring holder

4. Braking function

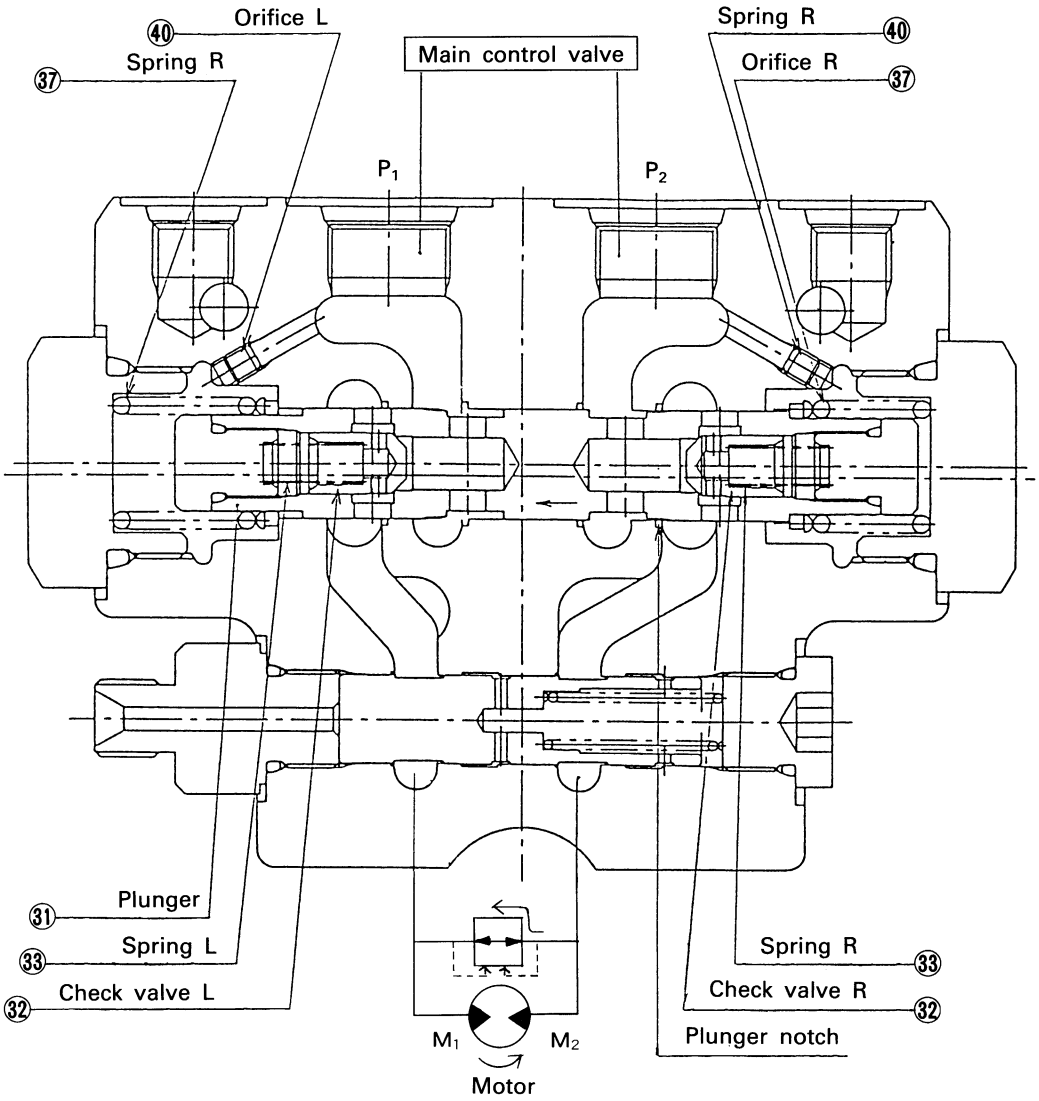

As a control valve is returned to the neutral, pressurized oil from a pump is shut off, ports P_1 & P_2 become equal in pressure, and the plunger (31) tries to return to the neutral position with spring R power. As the plunger (31) moves, the plunger contraction opening lessens, and moreover, the pressure of the port M_2 side rises because the piston motor tends to continue rotating due to its inertial energy (because of the pumping action of a motor). Relief valve R_2 operates with this pressure to escape oil to the port M_1 side, absorbs the shock pressure with inertial energy on the port M_2 side, and at the same time prevents a cavitation on the port M_1 side from occurring.

LOW SPERD FUNCTION

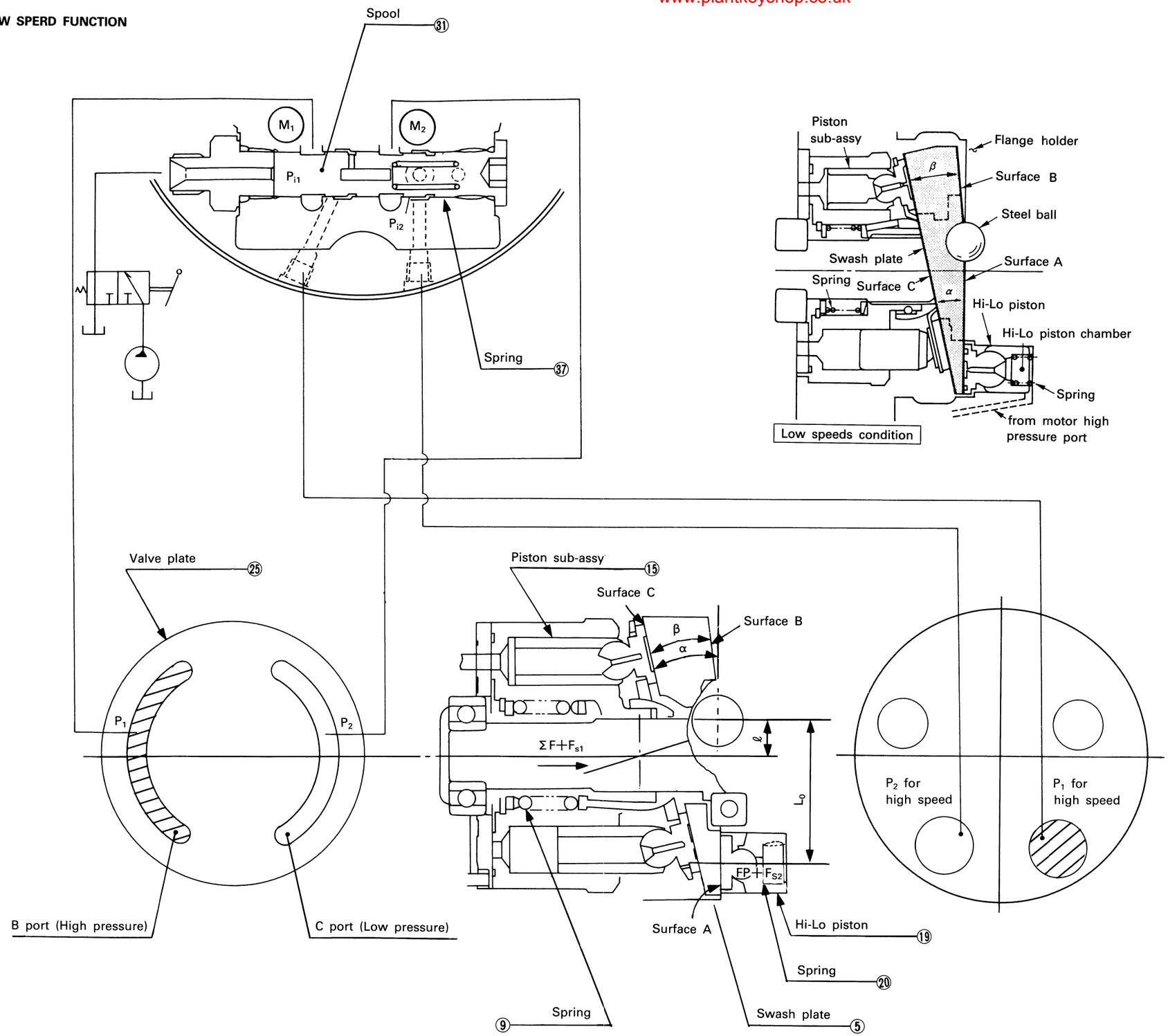

5. Low speed function

① Swash plate (5) has three planes A, B & C as shown in the figure and is incorporated in the flange holder in the diagonally rotable state by two steel balls (6).

② In the case where the control valve is in the first speed position, the spool (37) is positioned by spring power as shown in the figure at left, and the swash place control pistons (19) pass through ports Pi_1 & Pi_2 respectively and are connected to port T.
Consequently, a force to push up the swash plate (5) does not acts on swash plate control pistons (19).

$F_p=(Ap \cdot P)=0.$

Whereas,

Fp: Swash plate control piston thrust,
Ap: Pressure receiving area of a swash plate control piston, and
P: Pressure.

③ The equilibrium of moments to act on the swash plate with a steel plate (6) taken to be the center of diagonal rotation becomes

$(\Sigma F+F_{s1}) \cdot 1>(F_p+F_{s2}) \cdot L_0$

according to the sum total of thrusts of the respective pistons S/A (15), ΣF, and spring powers F_{s1} & F_{s2}.
And the swash plate becomes stable at plane C, the angle of swash plate becomes α, and the number of revolution of the motor in the first speed (low speed) is obtained.

HIGH SPEED FUNCTION

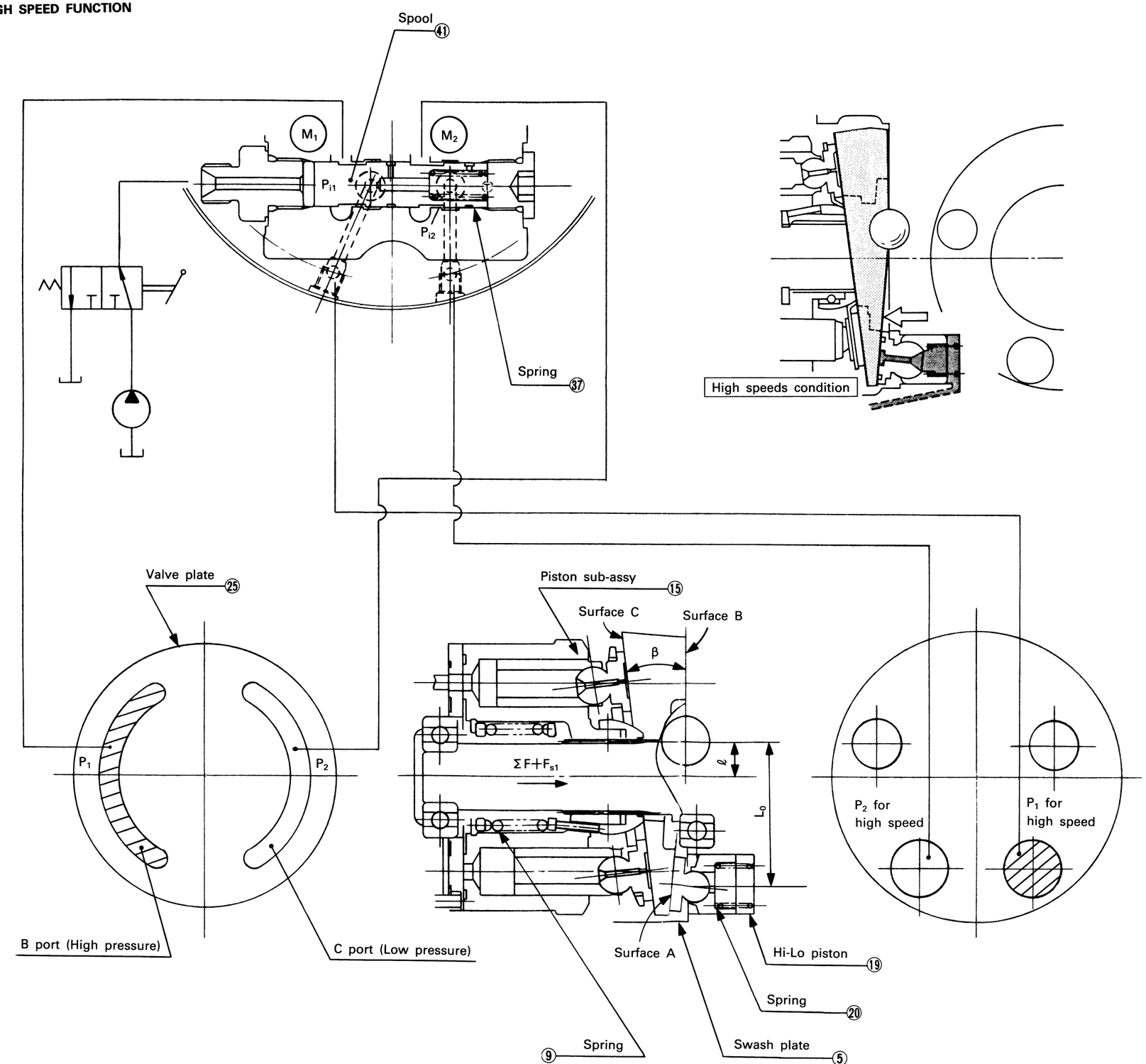

6. High speed function

① As the control valve is changed over to the second speed position, pressurized oil from a pump is led to the spool (41), and it is switched to a position shown in the figure at left.

② Motor drive pressure P_1 (high pressure) & P_2 (low pressure) are respectively led from ports M_1 & M_2 to swash plate control pistons (19) through ports P_{i1} & P_{i2}. Therefore, a force to push up the swash plate (5) acts on swash plate control pistons.

$$F_{p1}=A_p \cdot P_1,\ F_{p2}=A_p \cdot P_2$$

③ The equilibrium of moments to act on the swash plate (5) with a steel ball (6) taken to be the center of diagonal rotate on becomes

$$(\Sigma F+F_{s1}) \cdot 1<(F_p+F_{s2}) \cdot L_0$$

according to the sum total of thrusts of the respective pistons S/A (15), ΣF, spring (9) power F_{s1}, push-up force of swash plate control pistons and spring (20) power F_{s2}. And the swash plate becomes stable at plane B, the angle of swash plate becomes β, and the number of revolution of the motor in the second speed (high speed) is obtained.

④ Since pressurized oil does not flow in when the engine is in a stop, the spool (41) returns to the first speed position with spring (9) power. The equilibrium of moments to act on the swash plate with a steel ball taken to be the center of diagonal rotation becomes

$$F_s \cdot 1>F_p \cdot L_0.$$

And the swash plate becomes stable at plane A, and the angle of swash plate becomes α.

Consequently, a motor is always in the first speed state at time of a start.

7. Planetary reduction gear case.
This speed reducer consists of a two-stage planetary gear mechanism.

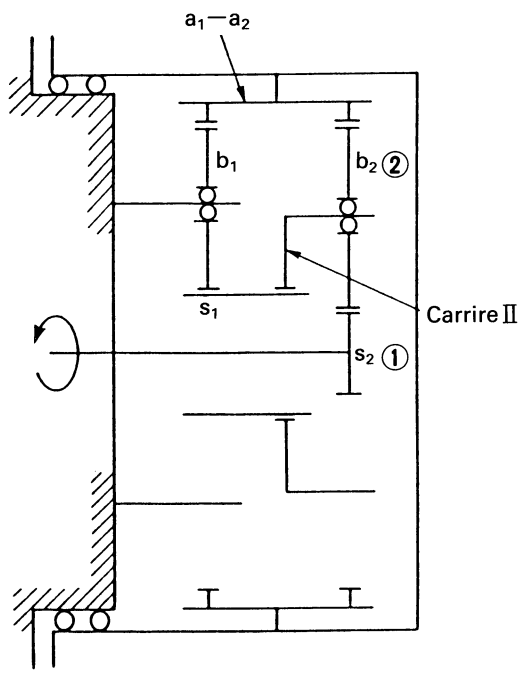

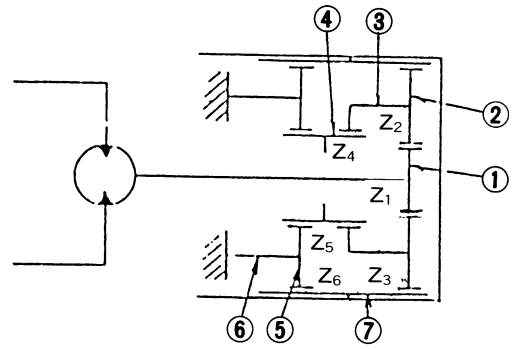

Drive gear ① intermeshes with the first-stage planetary gear ②; the second-stage sun gear ④, the second-stage planetary gear 5 . And the second-stage planetary carrier is fixed to the body. Planetary gears ② & ⑤ intermesh with ring gear ⑦ (housing). A driving force from a piston motor is transmitted to the drive gear ① and then reduced in speed by the respective gears. Driving force reduced in speed is transmitted to the ring gear ⑦ through the planetary gear ⑤ of planetary carrier ⑥ which is fixed to the final-stage body. (A driving force is transmitted also from the first-stage planetary gear ②.) Incidentally, input rotation is reverse to the output rotation, vice versa.
Reduction gear ratio i becomes as follows according to the first-stage and second-stage reduction gear ratios i_1 & i_2:

◎ Reduction gear ratio (i)

$$i=-(i_1 \times i_2-1)=-\left(\frac{Z_1+Z_3}{Z_1} \times \frac{Z_4+Z_6}{Z_4}-1\right)$$

Z_1 : Drive gear teeth No.
Z_3 : Ring gear teeth No.
Z_4 : Sun gear teeth No.
Z_6 : Ring gear teeth No.

◎ Reduetion gear case output torque (T)

$$T=T_M \times i=\eta_m$$

T_M : Input torque (Motor output touque)
i : Reduction gear ratio
η_m : Mechanical efficiency

◎ Reduetion gear case output speed (N)

$$N=\frac{N_M}{i}$$

N_M : Input rotation speed (Motor output speed)

The reduction gears comprising tow stages of simple planetary gears reduce the high-speed convert it into rotation of low speed and high torque to obtain an adequate gear rotation. The gear S_2 is connected to the output shafts of the hydraulic motor by soline and its rotating speed is reduced down toeprimary stage in between the gears (s, b, a).

The rotating speed thus reduced by one stage is reduced farther down to the secondary stage in between the gears (s21, b_1, a_1) which are connected to the carrier II by spline. This rotation is transmitted to the rotation body through the inner gears a_1, and a_1, and converted eventually into driving power of machine traveling.

[7] Oil tank

(1) Structure

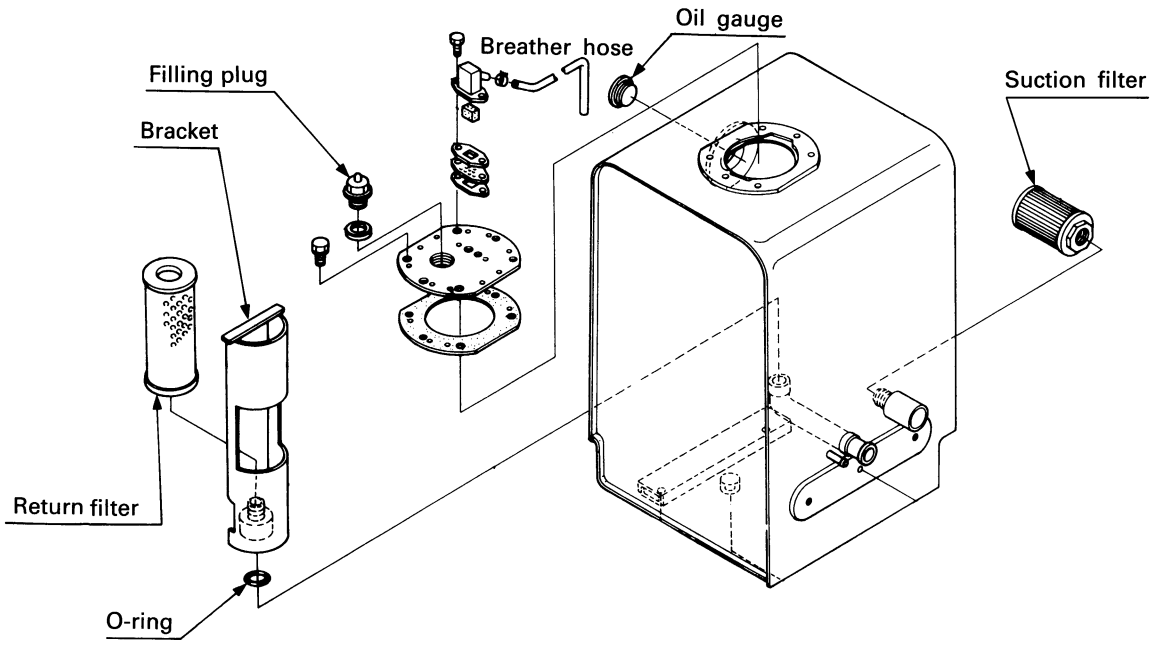

(2) Function

1. To store the volume of oil needed for operation of cylinders and hydraulic motors.
2. To separate the air, water content and dust found in oil.
3. To radiate heat to lower the oil temperature.
4. Re. volume of hydraulic oil, to check the oil level under the conditions that the arm and bucket cylinders are respectively contracted most and that the bucket and blade are grounded.

<**Note**>

If the volume of hydraulic oil becomes insufficient, turbulent flow of oil could not be calmed, and the air as mixed in oil is sucked in a pump and causes the occurrence of cavitation. Besides, the time to radiate heat also shortens, and it also causes a rise of oil temperature. However, if the volume of hydraulic oil is greater than the specified quantify, the air inside the tank lessens, and a change in pressure inside the tank due to a change of oil level becomes too large.

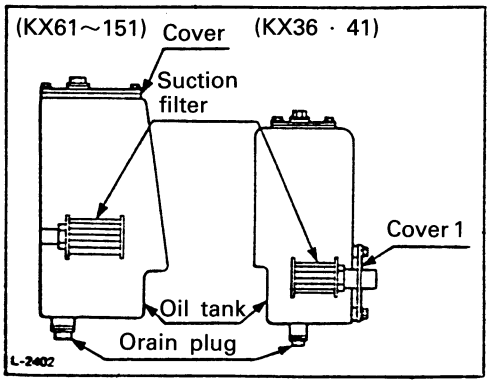

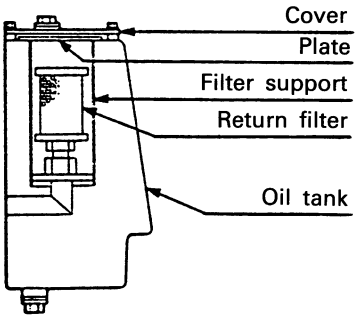

(3) Filter

	Suction filter							Return filter						
	KH-21 KH-007	KX36	KX41	KX61	KX71	KX101	KX151	KH-21 KH-007	KX36	KX41	KX61	KX71	KX101	KX151
Mesh [μm]	150 mesh(105 μm)							15 μm					10 μm	
Percorating area [cm^2]	270	420		515	1000	1000 / 1660		3670					4400	
Relief pressure [kgf/cm^2]								1.0±0.15					1.0±0.15	
Rated flow [ℓ/min]	20	45		75	80	80 / 200		22.4						
Durable pressure [kgf/cm^2]								6<					6<	
Code No.	68701-62151	68191-6218-1		68311-6218-1	68741-6221-1	68741-6221-1 / 69284-6221-1		68701-6219-1					68651-6212-0	
Maintenance interval	Every 1000 hs							First:250 hs and 500 hs interval						

(4) Operating oil

1. Recommendes oil : Hydraulic fluid #46
2. Viscosity range :
3. Oil temp. range :
4. Contamination level : NAS 9 class
5. Oil amount :

	KX36	KX41	KX61	KX71	KX101	KX151
Tank oil amount	6	6	15	20	25	40
Total oil amount	12	12	25	43	59	75

6. Maintenance interval : Every 1000 hours

[8] Oil cooler

(1) Outline

1. Pump 3 oil flows through oil cooler.
2. Check valve spring is set for 3 kgf/cm^2.

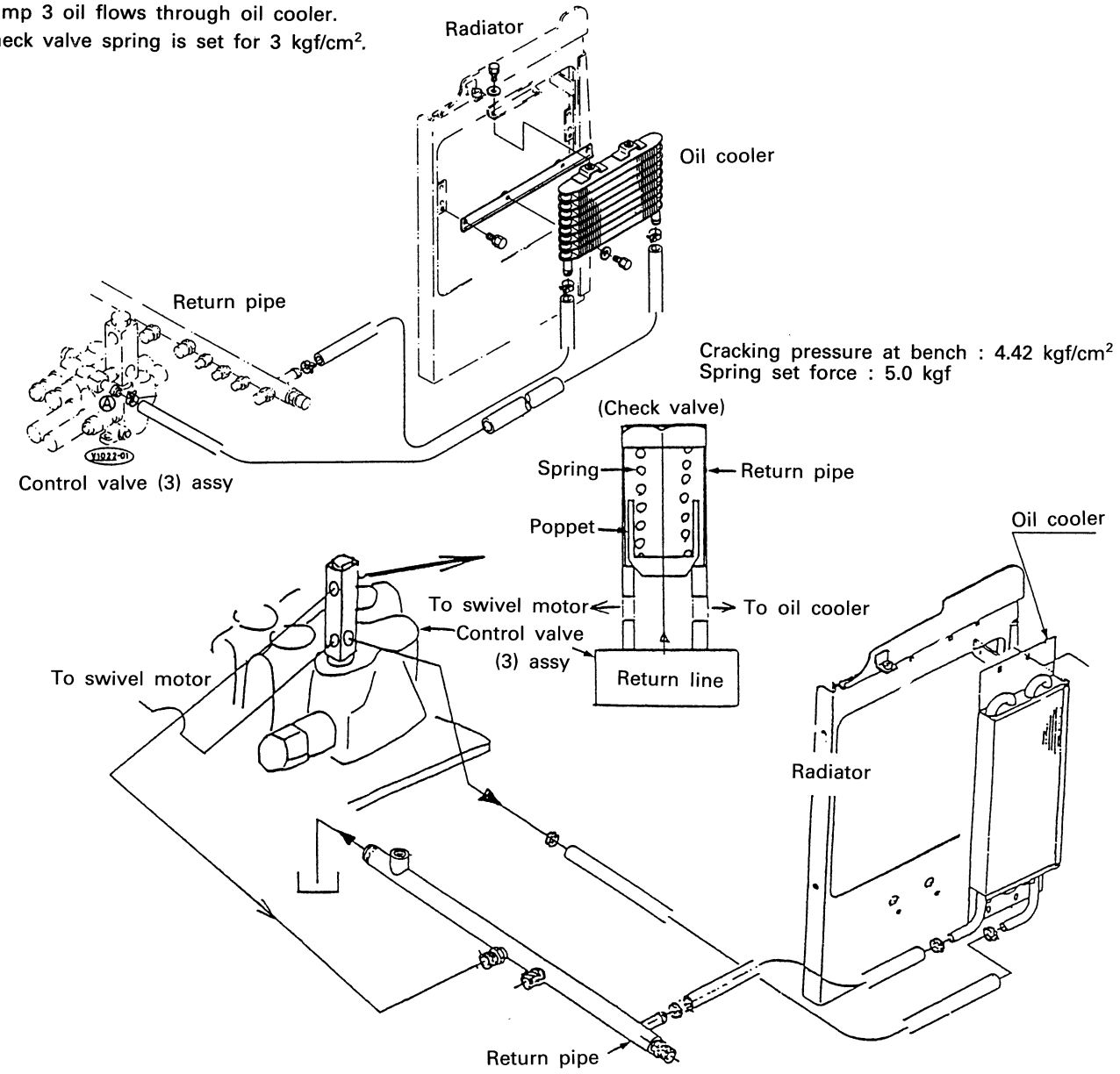

Model		KX36	KX41	KX61	KX71	KX101	KX151
Oil cooler assy Cod. No.		68191-9351-1	68191-9351-1	68308-64111 (12 stage)	68328-64111 (15 stage)	68328-64111 (15 stage)	68328-64111 (15 stage)
Nominal cooling capacity (Kcal/h)		2230	2230	3900	4700	4700	4700
Condition	Flow rate (ℓ/min)	12	12	15	15	15	15
	Temp. diff. (deg.)	75	75	75	75	75	75
	Wind velocity (m/s)	8	8	8	8	8	8
Actual flow rate	50°C	9	11	17.1	18.2	21.3	31.4
	80°C	11.5	13.5				
cooler oil amount		0.11	0.11	0.24	0.30	0.30	0.30
Durable pressure (Kgf/cm^2)		30	30	10	10	10	10
Orifice dia. (mm)		ϕ4	ϕ4	ϕ4.5	ϕ5	ϕ5	ϕ6

Record of Revisions

Symbol	Date	Main Revised Points & Corrective Measures	Person-in-charge
1	1992 Sept. 20th	• KX35, 41 wheel motor chart • Hydraulic circuit diagram change • Add KTC, KCL, KTA specification	M. TANAKA Service Engineering Section, Hirakata
2			
3			

KUBOTA Corporation
CONSTRUCTION MACHINERY DIVISION
2-47, SHIKITSUHIGASHI 1-CHOME, NANIWA-KU, OSAKA, JAPAN

EDITOR:
CONSTRUCTION MACHINERY MANUFACTURING DEPARTMENT
SERVICE SECTION
HIRAKATA PLANT
1-1-1 NAKAMIYA-OHIKE, HIRAKATA-CITY, OSAKA, JAPAN
PHONE : 81-72-840-1195
FAX : 81-72-890-2886

KUBOTA Corporation

Printed in Japan Code No.97899-60271
9209, AK, AK, e, 10